1998-1999
ELECTRICAL WIRING
MANUAL

MVP-ER

1998-1999 Thomas Built Buses Inc.

Part #85410245

1998-1999 MVP-ER ELECTRICAL WIRING MANUAL

This manual should be kept in a convenient place for ready reference.

All information, illustrations, and specifications contained in this manual are based on the latest product information available at the time of publication approval. The right is reserved to make changes at any time without notice.

No part of this publication may be reproduced, stored in any retrieval system, or transmitted in any form or by any means, including but not limited to electronic, mechanical, photocopying, recording, or otherwise, without the prior written permission of Thomas Built Buses Incorporated.

©1999 Thomas Built Buses, Inc. All rights reserved. No portion of this catalog may be reproduced by any means without express permission from the copyright holder.
Printed In U.S.A. 09/99

1998-1999 MVP-ER
BODY
TABLE of CONTENTS

BODY SCHEMATICS **Page #**

General Recommendations - Maintenance and Repair 1
System Protection from Short Circuits 1
Testing for Voltage Drop 2
Testing for Short to Ground 2
Checking Current Draw 2
Troubleshooting Tools 2
Troubleshooting Tests 2

PANELS 3

Elect. Components Side Panel (Body) 4
Elect. Components Mounting, Side Panel LWP Models, CAT 3126 Engine (Chassis) 5
Elect. Diagram Component Mounting, Side Panel, 98 Cat 3126 Engine (Chassis) (1 of 2) 6
Elect. Diagram Component Mounting, Side Panel, 98 Cat 3126 Engine (Chassis) (2 of 2) 7
Elect. Diagram Component Mounting, Side Panel, 98 Cummins ISB/ISC (Chassis) (1 of 2) 8
Elect. Diagram Component Mounting, Side Panel, 98 Cummins ISB/ISC (Chassis) (2 of 2) 9
Elect. Diagram Modular Box Compartment Mounting, CAT 3126 Engine (Chassis) 10
Elect. Diagram Mod. Box Comp. Mtg. 98 Cat 3126 (Chassis) (1 of 3) 11
Elect. Diagram Mod. Box Comp. Mtg. 98 Cat 3126 (Chassis) (2 of 3) 12
Elect. Diagram Mod. Box Comp. Mtg. 98 Cat 3126 (Chassis) (3 of 3) 13
Elect. Diagram Mod. Box Comp. Mtg. 98 Cat 3126 (Chassis) (1 of 3) 14
Elect. Diagram Mod. Box Comp. Mtg. 98 Cat 3126 (Chassis) (2 of 3) 15
Elect. Diagram Mod. Box Comp. Mtg. 98 Cat 3126 (Chassis) (3 of 3) 16
Elect. Diagram Mod. Box Compon. Mtg. Cummins 6B (Chassis) 17
Elect. Diagram Mod. Box Compon. Mtg. 98 Cummins 6B (Chassis) (1 of 2) 18
Elect. Diagram Mod. Box Compon. Mtg. 98 Cummins 6B (Chassis) (2 of 2) 19
Elect. Diagram Mod. Box Compon. Mtg. 98 Cummins 6B (Chassis) (1 of 2) 20
Elect. Diagram Mod. Box Compon. Mtg. 98 Cummins 6B (Chassis) (2 of 2) 21
Elect. Diagram Mod. Box Compon. Mtg. 98 Cummins 6B (Chassis) (1 of 2) 22
Elect. Diagram Mod. Box Compon. Mtg. 98 Cummins 6B (Chassis) (2 of 2) 23
Elect. Diagram Mod. Box Compon. Mtg. 98 Cummins 6B (Chassis) (1 of 3) 24
Elect. Diagram Mod. Box Compon. Mtg. 98 Cummins 6B (Chassis) (2 of 3) 25
Elect. Diagram Mod. Box Compon. Mtg. 98 Cummins 6B (Chassis) (3 of 3) 26
Elect. Diagram Mod. Box Compon. Mtg. 98 Cummins 6B (Chassis) (1 of 3) 27
Elect. Diagram Mod. Box Compon. Mtg. 98 Cummins 6B (Chassis) (2 of 3) 28
Elect. Diagram Mod. Box Compon. Mtg. 98 Cummins 6B (Chassis) (3 of 3) 29
Elect. Diagram Mod. Box Compon. Mtg. Cummins 6C (Chassis) 30
Elect. Diagram Mod. Box Compon. 6C (Chassis) 31

BODY SCHEMATICS **Page #**

PANELS *(Continued)* . . . . . .

Elect. Diagram Mod. Box Compon. Mtg. 98 Cummins ISC (Chassis) (1 of 3) 32
Elect. Diagram Mod. Box Compon. Mtg. 98 Cummins ISC (Chassis) (2 of 3) 33
Elect. Diagram Mod. Box Compon. Mtg. 98 Cummins ISC (Chassis) (3 of 3) 34
Chart - Circuits, Electrical (Body) (1 of 5) 35
Chart - Circuits, Electrical (Body) (2 of 5) 36
Chart - Circuits, Electrical (Body) (3 of 5) 37
Chart - Circuits, Electrical (Body) (4 of 5) 38
Chart - Circuits, Electrical (Body) (5 of 5) 39
Chart - Electrical Circuits w/Color Codes, 1990 (Chassis) (1 of 3) 40
Chart - Electrical Circuits w/Color Codes, 1990 (Chassis) (2 of 3) 41
Chart - Electrical Circuits w/Color Codes, 1990 (Chassis) (3 of 3) 42

MAIN BODY 43

Main Body - Wiring 44

LIGHTS 45

Separate Switch for Marker Lights (Option: B3670-01-000) 46
Emergency Door Activated Dome Lights, with and without Vandalock 47
Opening Activated Dome Lights w/Vandalock 48
Fog Light (Option: B3680-04-000 49
Strobe Light 50
Strobe Light, Roof Mounted, Specialty Model #205-202 51
Strobe Light Roof Mounted, Headlight Switch Wired Specialty Model #205-202 52
Strobe Light, Roof Mounted, Specialty Model #205-212 53
Strobe Light Model #515-410 54
Strobe Warning System, Whelen School 55
Strobe Light (South Carolina) 56
Strobe Light Operation w/Door Switch 56
Red Warning Light Override Switch 57
Pilot Light, Green, “Reverse Gear” 58

EIGHT LIGHT WARNING SYSTEM 59

Four Light Warning System (Wisconsin) 60
Four Light Warning System (Wisconsin) 61
Eight Light Warning System 62
Eight Light Warning System 63
Eight Light Warning System 64
Eight Light Warning System 65
Eight Light Warning System 66

1998-1999 MVP-ER
BODY
TABLE of CONTENTS

BODY SCHEMATICS **Page #**

EIGHT LIGHT WARNING SYSTEM *(Continued)*
Eight Light Warning System .67
Eight Light Warning System (South Carolina) .72
Eight Light Warning System (Virginia) .73
Eight Light Warning System (Florida) .74
Eight Light Warning System (California) .75
Strobe Eight Light Warning System .76
Eight Light Warning System (Kentucky) .77

STOP SIGNS & CROSSING GATES .79
Electric Stop Sign, Specialty 5000 Series .80
Stop Arm Strobe Light, Single and H/L Operation, Electric, Air & Vacuum .81
Electrical Stop Arm Transpec w/LED's, 3 Wire Harness .82
Electrical Stop Arm Transpec w/LED's, 4 Wire Harness .83
Electric Stop Sign, BMR 6000 Series .84
Stop and Crossing Arm .85
Electric Crossing Arm 5000 Series .86
Air Stop Sign & Air Crossing Control Arm .87
Crossing Arm Deactivating Switch .88

HEATERS .89
Front Heater .90
Stepwell Heater .91
Underseat Heaters .92

AIR CONDITIONING .93
Air Conditioning DC-1052, 1053 .94
Air Conditioning DC-1052, 1053 .95

DOORS .97
Lift Door .98
Lift Door with Brake Interlock .99
Loading Door Buzzer Shut Off Switch (Option B3110-01-000) .100
Transmission in Neutral Interlock, Add Wire & Terminals .101
Door Control, 2 Position, No Interlock (Option B5016-22-000) .102
Door Control, 2 Position, with Interlock (Option B5016-21-000) .103
Door Control, 5 Position, with Interlock (Option B5016-16-000) .104
Eight Light Warning System w/Red Override Switch .68
Eight Light Warning System .69
Eight Light Warning System .70

BODY SCHEMATICS **Page #**

DOORS *(Continued)*
Eight Light Warning System (Maryland) .71
Rear Exit, 2 Position Door Control, w/Brake Interlock (Bode) .105
Wheelchair Driver Controlled Exit Door, Brake Interlock (Bode) .106
Rear Door w/Front Door, 5 Position Door Control, w/Brake Interlock (Bode) .107
Wheelchair Driver Controlled Exit Door, Front Door, Brake Interlock (Bode) .108
Rear Exit, 2 Position Door Control, w/Brake Interlock (Bode) .109
Wheelchair, Rear Exit, 2 Position Door Control, w/Brake Interlock (Bode) .110
Rear Door w/Front Door, 5 Position Door Control, w/Brake Interlock (Bode) .111
Wheelchair Exit w/Touch Bar and Time Delay, and Brake Interlock (Bode) .112
Rear Exit, 2 Position Door Control, w/Brake Interlock (Bode) .113
Wheelchair Rear Exit, 2 Position Door Control, w/Brake Interlock (Bode) .114
Rear Door w/Front Door, 5 Position Door Control, w/Brake Interlock (Bode) .115
Wheelchair Exit w/Touch Bar, Driver Close, w/Brake Interlock (Bode) .116
Speedswitch .117

VANDALOCK .119
Wiring Schematic (Vandalock) .120

RADIO & SPEAKERS .121
PA Radio, Mito SP Series .122
Radio Speakers .123
Six Radio Speakers .124
Rheostat Controlled Driver's Speaker .125
Rheostat - 10 Watt Single Line Audio .125

MISCELLANEOUS .127
Doran Monitor All Models .128
Fan Overhead Fan on Chick Bus .129
Single Defroster Switch (Option: B3826-00-000 .130
Heated Mirrors .131
Intermittent Windshield Wiper, Dual w/Module .132
Module, Intermittent Relay, for Single Wiper Motor .133
Video Camera Supply and Ground Circuit (South Carolina) .133
Backing Alarm .134
Roll Back Alarm .134
Roof Escape Hatch w/Power Vent (Transpec, Model 1600) .135
Touch Tape Chime System, for ADA Stop Request .136
Tachograph (Argo 1318-02) .137

1998-1999 MVP-ER
CHASSIS
TABLE of CONTENTS

CHASSIS SCHEMATICS **Page #**

MAIN CHASSIS **139**
Pusher w/Douglas Column 140
Elect. - LWP Douglas Column/Fox Turn Signal Switch 141
Elect. - LWP Douglas Column/Fox Turn Signal, Cat 3126 Engine 142
Elect. - LWP Douglas Column/Fox Turn Signal, Cat 3126 Engine (Kentucky) 143
Elect. - LWP Douglas Column/Fox Turn Signal, Cat 3126 Engine (Kentucky) 144
Elect. - LWP Douglas Column/Fox Turn Signal, 98 Cat 3126 Engine 145
Elect. - LWP Douglas Column/Fox Turn Signal, 98 Cat 3126 Engine 146
Elect. - LWP Douglas Column/Fox Turn Signal, 98 Cat 3126 Engine 147
Elect. - LWP Douglas Column/Fox Turn Signal, 98 Cat 3126 Engine 148
Elect. - LWP Douglas Column/Fox Turn Signal, 98 Cummins ISB Engine 149
Elect. - LWP Douglas Column/Fox Turn Signal, 98 Cummins ISB Engine 150
Elect. - LWP Douglas Column/Fox Turn Signal, 98 Cummins ISB Engine 151
Elect. - LWP Douglas Column/Fox Turn Signal, 98 Cummins ISB Engine 152

ENGINE **153**
Elect. Cat 3126 (1 of 2) 154
Elect. Cat 3126 (2 of 2) 155
Elect. Cat 3126 (98 Model) (1 of 3) 156
Elect. Cat 3126 (98 Model) (2 of 3) 157
Elect. Cat 3126 (98 Model) (3 of 3) 158
Elect. Cat 3126 (98 Model) (1 of 3) 159
Elect. Cat 3126 (98 Model) (2 of 3) 160
Elect. Cat 3126 (98 Model) (3 of 3) 161
Elect. Cat 3126 (98 Model) (1 of 3) 162
Elect. Cat 3126 (98 Model) (2 of 3) 163
Elect. Cat 3126 (98 Model) (3 of 3) 164
Electrical Cummins 6B Eng. OEM Interface Conn. A (98 Model) 165
Electrical Cummins ISB Eng., OEM Interface Conn. A (98 Model) 166
Electrical Cummins ISB Eng. OEM Interface Conn. B (98 Model) 167
Electrical Cummins ISB/ISC Eng., OEM Interface Conn. B (98 Model 168
Electrical Cummins ISC Eng., OEM Interface Conn. A (98 Model) 169

CHASSIS SCHEMATICS **Page #**

TRANSMISSION **171**
Mores Electronic Maxxe Transmission Shifter (L.A. Unified) 172
Elect. Sturdy Governor, CAT 3116 173
Elect. Allison MD Elect. Transmission 174
Elect. Allison WTEC III Transmission Non Retarder 175
WTEC III Non Retarder, Bussman VIM 176
Electrical Allison WTEC III Transmission Retarder Version 177
WTEC III Retarder Version, Bussman VIM 178
Retarder Hand Control Installation, WTEC III 179

BRAKES **181**
Elect. Antilock Brake System (98 Model) (Kentucky) 182
Antilock Brake System w/Traction 183
Elect. Exhaust Brake 184
Exhaust Brake w/WTEC III Transmission 185
Exhaust Brake w/Bussman Rev. WTEC III 186

SPEEDOMETER **187**
Speedo at Trans., Pulse Distrib. Mod. 98 Cummins ISB 188

LIGHTS **189**
Headlights Daytime Running Lights, Std. Switch High Wattage Headlights (LWP) 190
Daytime Running Lights, w/Opt. C3675 Master Control Switch 191
Daytime Running Lights w/Std. Headlight Switch & Starter Interrupt (1 of 2) 192
Daytime Running Lights w/Std. Headlight Switch & Starter Interrupt (2 of 2) 193
Master Control Switch 194
Hazard Lamps Solid State Flasher 195

ALTERNATOR **197**
Power Cable Term. Points, Mod. Rear Box 198
Alternator Low Output Charge Indicator Relay/Light (Delco) 199
Alternator Diode Assembly 200

MISCELLANEOUS **201**
Elect. Onspot Chains 202
Roll-Back Alarm 203
Power & Ground Cables, 98 Cummins ISB 204
Electrical Component Mtg./Wiring Grid Htrs., 98 Cummins ISB 205

General Recommendations - Maintenance and Repair

The following comments may be helpful in avoiding some of the most common problems experienced over the life of the bus.

1. Shorts in Cables and Harnesses:
   Cables that chafe of dangle will eventually wear through the insulation and result in a short. This can also cause terminals to loosen at their terminal point. Many times a mounting clip is removed to permit access to another component or to service that particular harness/cable. ALWAYS reinstall the mounting clips to their original position.
2. Corrosion in Sockets and Terminals:
   This can be a serious problem on units operating on streets and highways using salt and sodium chloride products.

   The use of an anti-corrosive sealant, such as Graffo 116 to coat exposed connectors, switches, and ground terminals, is very helpful in deterring corrosion in such areas.

   The use of a dielectric grease to coat the base and sockets of bulbs will deter the formation of corrosion in lamps exposed to road contaminants. It, also, reduces road shock in the bulb filaments.

3. Circuit Resistance:
   Circuit resistance is usually caused by loose terminals at the point of termination, improper crimping of replacement terminals onto the wire, and unprofessional splicing of two wires together.

   Practically all replacement terminals require a special tool to insure a complete, secure bond of the terminal and the wire. If the proper crimping tool is not available, the terminal should be soldered to the wire, using a rosin flux solder. Always cover the end of the terminal with a one inch piece of heat shrink tubing to prevent the entrance of water, salt, etc.

   Twisting the wires together is acceptable <u>only</u> if the union is then soldered with rosin flux solder, and covered with a heat shrink tubing extending one inch on each side of the union. Butt splices are also common in such a repair. Again, cover the splice with heat shrink tubing.

   Wiring left improperly sealed will corrode, and the corrosion can wick up the entire length of the wire. **Figure 1** is an example of the proper way to splice two wires together.

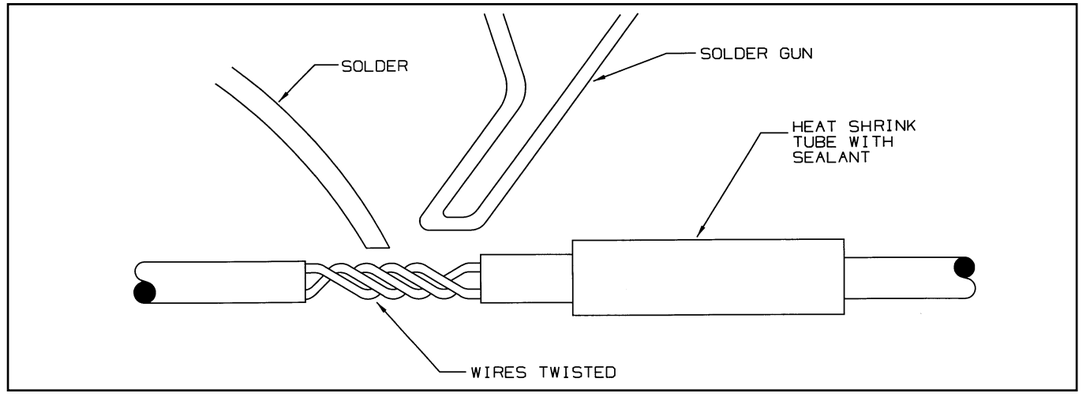

Figure 1

4. Overloaded Circuits:
   Additional electrical components should not be added to existing circuits. There is room for additional circuit breakers on the side electrical panel, if additional options are added in the field.

5. Proper Diagnosis:
   Thorough diagnosis is a must to eliminate repeat failures in the electrical system. Determining the cause of a particular failure not only solves the problem on the unit involved, but it may be helpful in preventing failures on other similar units in the fleet.

   In the event a particular circuit breaker continues to trip, even though no short is found, it would be wise to check the circuit flow on that circuit and compare it to the rating of the circuit breaker. The circuit breaker. The circuit breaker may be tripping below its rating, or the current draw may be in excess of the breaking rating.

   To check current draw on any given circuit, connect an ammeter in series between the circuit and a battery terminal. Energize the circuit and read the amps registered on the ammeter.

System Protection from Short Circuits

The electrical system has three means of protection from damage due to a short circuit in the total system:

1. Each circuit is protected by an automatic resetting circuit breaker. In some instances a circuit breaker may accommodate more than one circuit; however, in no case would the combined load be in excess of the rating of the circuit breaker if all the circuits were energized at the same time. In the event such a circuit breaker is tripping all the time it will be necessary to check out each circuit using that circuit breaker.

2. A 150 amp manual-reset Master circuit breaker is located on the front electrical panel of the MVP-EF, and on the rear electrical panel of the MVP-ER, ER-Transit, CL960 and TL960. This will protect the electrical system from damage that may occur from a major short in any area not protected by a fuse or automatic circuit breaker. This circuit breaker must be manually reset in the event it trips. When the breaker trips, the small RED button will depress. To reset it, move the small black lever located on the left side of the breaker back against the body of the breaker. When the electrical system has to be taken out of service to make other repairs, the master breaker can be tripped by depressing the small RED button in the center of the breaker.

   In the event the Master breaker should trip more than once, the cause MUST be determined before placing the bus back in service.

3. In the unlikely event a battery cable should short out against a chassis component, the 2 AWG engine-to-chassis ground cable will fail. This cable is attached to the engine block on the right side and is connected to the right frame rail.

   In addition to the above precautions to minimize damage from an electrical fire, the insulation on all wiring is of a crosslink polyethylene composition which will not maintain combustion once the copper core of the wire cools. The same applies to convoluted tubing used to protect harnesses and tubing from chafing and the elements.

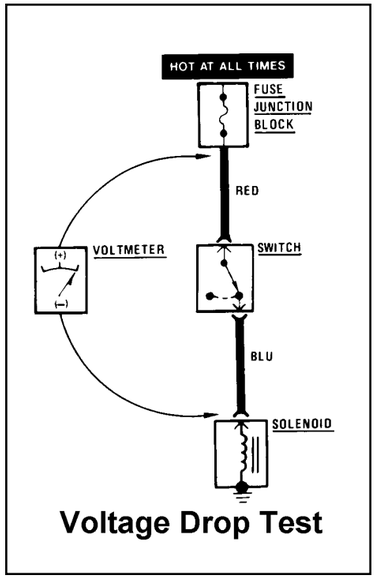

Figure 2

Testing for Voltage Drop

This test checks for voltage being lost along a wire, or through a connection or switch. See **Figure 2.**

1. Connect the positive lead of a voltmeter to the end of the wire (or to the side of the connection or switch) which is closest to the battery.
2. Connect the negative lead to the other end of the wire (or the other side of the connection or switch).
3. Operate the circuit.
4. The voltmeter will show the difference in voltage between the two points. A difference (or drop) of more than one volt indicates a problem.

Testing for Short to Ground

1. Remove the blown fuse, leaving the battery connected.
2. Connect the short finder across the fuse terminals.
3. Close all switches in series with the circuit you are trouble-shooting.
4. Operate the short finder. The short finder will pulse current to the short. This creates a pulsing magnetic field surrounding the circuit wiring between the fuse junction block and the short.
5. Beginning at the fuse junction block, slowly move the short finder meter along the circuit wiring. The meter will show current pulses through sheet metal and body trim.

As long as the meter is between the fuse junction block and the short, the needle will move with each current pulse. When you have moved the meter past the point of the short, the needle will stop moving. Examine the wiring in that area for the short to ground. See **Figure 3.**

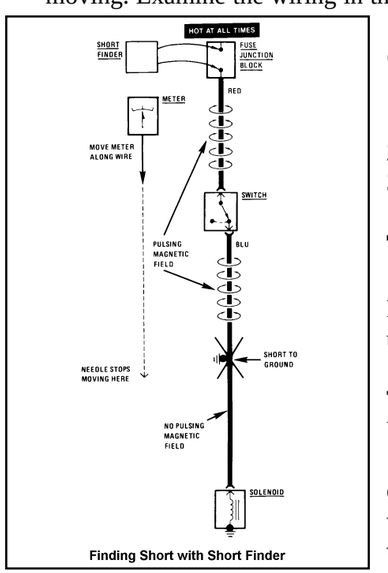

Figure 3

Checking Current Draw

1. Connected in series IN a circuit according to polarity.
2. Measures current flow.
3. Used in a closed circuit. See **Figure 4.**

Troubleshooting Tools

Electrical troubleshooting requires the use of common electrical test equipment.

Test Light/Voltmeter:
Use a test light to check for voltage. A Test Light is made up of a 12-volt light bulb with a repair of leads attached. After grounding one lead, touch the other lead to various points along the circuit where voltage should be present. When the bulb goes on, there is voltage at the point being tested.

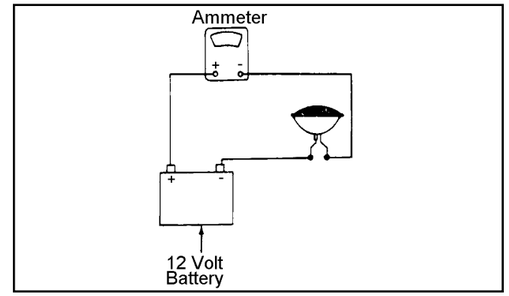

Figure 4

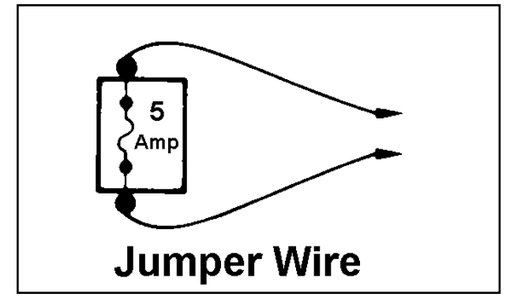

Figure 5

A voltmeter can be used instead of a test light. While a test light shows whether or not voltage is present, a voltmeter indicates how much voltage is present.

Never use a test light on circuits that contain solid state components, since damage to these components may result.

Jumper Wire:
A jumper wire is made up of an in-line fuse holder connected to a set of test leads. It should have a five ampere fuse. Use it for bypassing open circuits. Never use a jumper wire across any load (motors, etc.). This direct battery short will blow the fuse. See **Figure 5.**

Short Finder:
Short Finders are available to locate hidden shorts to ground. The short finder creates a pulsing magnetic field in the shorted circuit and shows you the location of the short through body trim or sheet metal.

Troubleshooting Tests

Test for Voltage:

1. Connect one lead of a test light to a known good ground. If you are using a voltmeter, be sure it is the voltmeter's negative lead that you have connected to ground.
2. Connect the other lead of the test light or voltmeter to a selected test point (connector or terminal).
3. If the test light glows, there is voltage present. If you are using a voltmeter, note the voltage reading. It should be within one of measured battery voltage. A loss of more than one volt indicates a problem. See **Figure 6.**

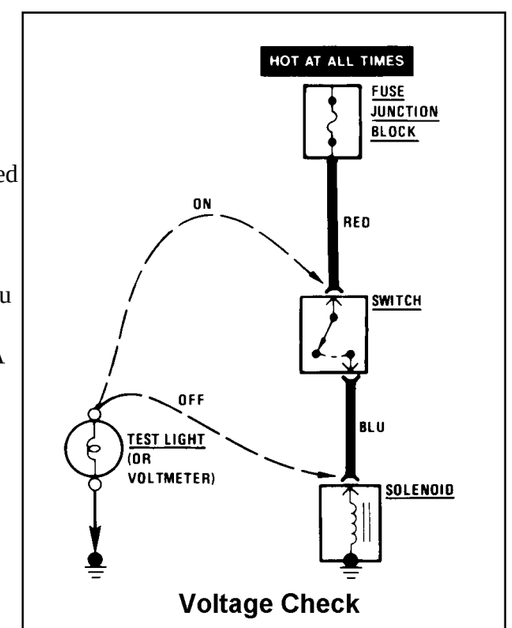

Figure 6

MVP-ER
PANEL
SCHEMATICS

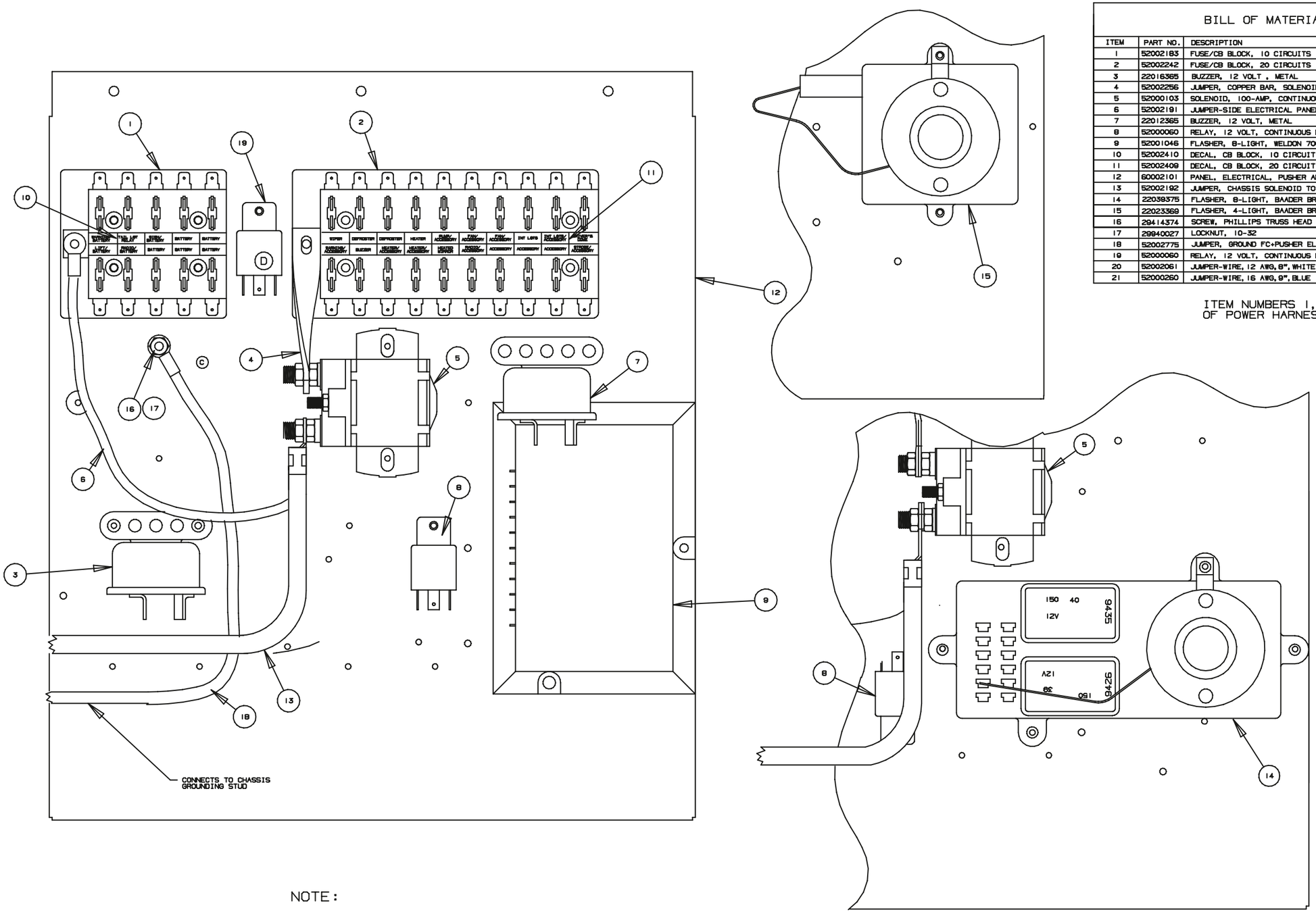

BILL OF MATERIALS

ITEM	PART NO.	DESCRIPTION	QTY.
1	52002183	FUSE/CB BLOCK, 10 CIRCUITS	1
2	52002242	FUSE/CB BLOCK, 20 CIRCUITS	1
3	22016365	BUZZER, 12 VOLT , METAL	1
4	52002256	JUMPER, COPPER BAR, SOLENOID TO CB BLOCK	1
5	52000103	SOLENOID, 100-AMP, CONTINUOUS DUTY	1
6	52002191	JUMPER-SIDE ELECTRICAL PANEL, 8 GA.	1
7	22012365	BUZZER, 12 VOLT, METAL	OPT.
8	52000060	RELAY, 12 VOLT, CONTINUOUS DUTY, 50/20 AMP	OPT.
9	52001046	FLASHER, 8-LIGHT, WELDON 7000	OPT.
10	52002410	DECAL, CB BLOCK, 10 CIRCUIT	1
11	52002409	DECAL, CB BLOCK, 20 CIRCUIT	1
12	60002101	PANEL, ELECTRICAL, PUSHER AND F.C.	1
13	52002192	JUMPER, CHASSIS SOLENOID TO BODY SOLENOID	1
14	22039375	FLASHER, 8-LIGHT, BAADER BROWN	OPT.
15	22023369	FLASHER, 4-LIGHT, BAADER BROWN	OPT.
16	29414374	SCREW, PHILLIPS TRUSS HEAD NO. 10-32 X 1 1/4	1
17	29940027	LOCKNUT, 10-32	2
18	52002775	JUMPER, GROUND FC+PUSHER ELECT. PANEL	1
19	52000060	RELAY, 12 VOLT, CONTINUOUS DUTY, 50/20 AMP	OPT.* B3701-04-000
20	52002061	JUMPER-WIRE, 12 AWG, 8", WHITE	OPT.* B3701-04-000
21	52000260	JUMPER-WIRE, 16 AWG, 9", BLUE	OPT.* B3701-04-000

ITEM NUMBERS 1, 2, 10 AND 11 ARE PART OF POWER HARNESS ASSEMBLY 52002521.

NOTE:

ELECTRICAL COMPONENTS USED MAY VARY DEPENDING ON SPECIFICATIONS AND OPTIONS-THIS DRAWING SHOULD ONLY BE USED AS A REFERENCE.

Thomas BUILT BUSES

52002423 D

ELECT. COMPONENTS SIDE PANEL (BODY)

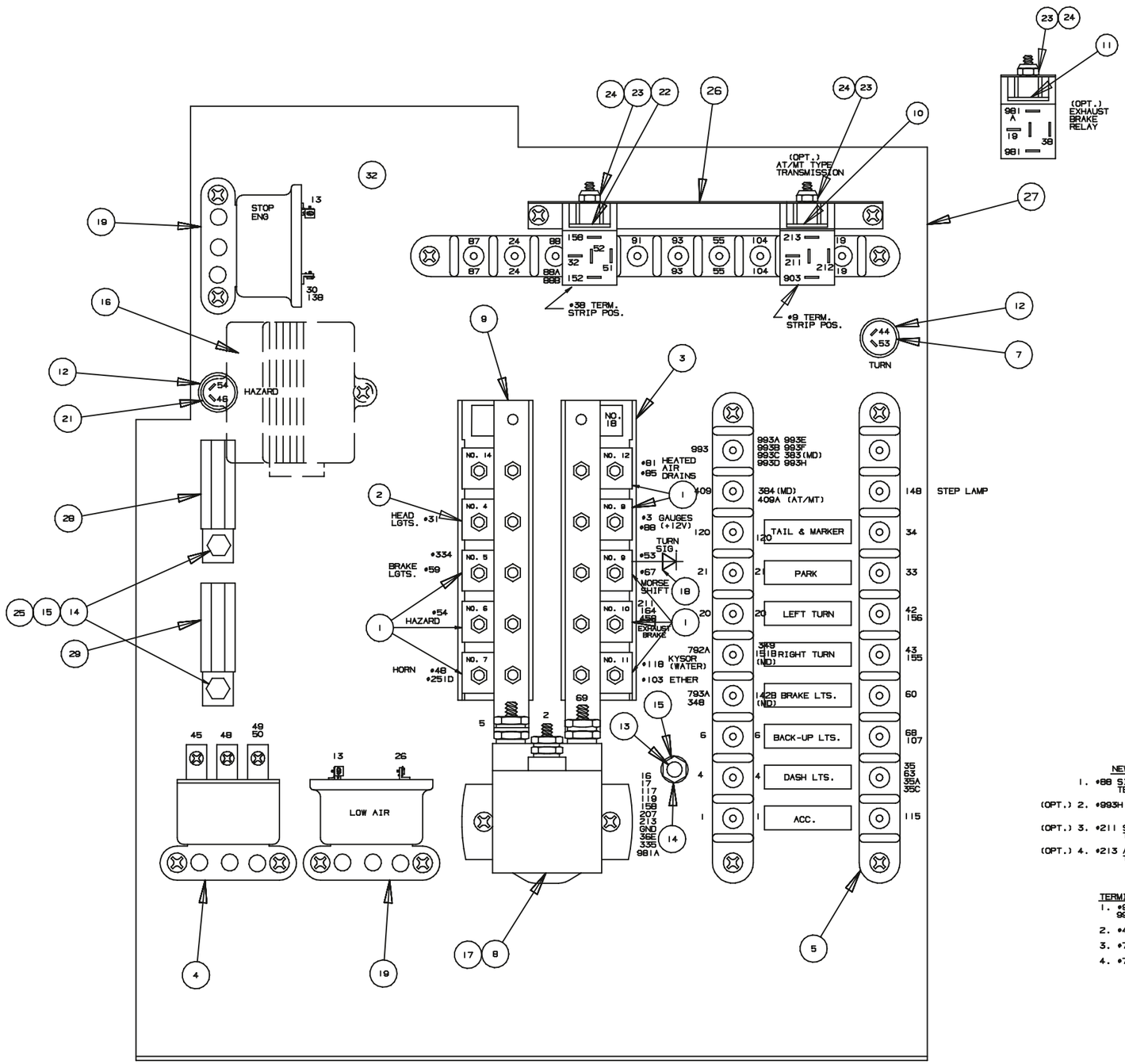

ITEM #	PART NUMBER	DESCRIPTION		STD / OPT	QTY
1	61200104	CIRCUIT BREAKER-20 AMP			8
2	61200105	CIRCUIT BREAKER-35 AMP			1
3	61200845	CIRCUIT BREAKER BRACKET			2
4	61200109	HORN RELAY			1
5	61200129	JUNCTION BLOCK			3
6	61200393	KYSOR COOLANT LEVEL ALARM MODULE (NOT SHOWN)	C2607	OPT	1
7	61200413	FLASHER-12 VOLT #552 (TURN SIGNAL)			1
8	61200411	ESSEX POWER CONTACTOR			1
9	62200727	BUSS BAR			2
10	61201114	RELAY-CONTROL, SUPPRESSED	C6002	OPT	1
11	61201114	RELAY-CONTROL, SUPPRESSED	EXHAUST BRAKE	OPT	1
12	61200414	MOUNTING CLIP-FLASHER			2
13	61370803	GND STUD 1/4-20 x 1			1
14	61370260	LOCK WASHER 1/4			4
15	61370050	NUT 1/4-20			4
16	61201159	SOLID STATE ELECTRONIC FLASHER	B3725	OPT	1
17	62200728	SPACER-CONTACTOR MTG			2
18	62200633	DIODE ASSEMBLY - ANTI FEEDBACK (TURN SIG.)			1
19	61200165	WARNING BUZZER LOW AIR, LO OIL/HI TEMP			2
20	62230894	BRACKET, MTG.-DATA LINK PLUG			
21	61200435	FLASHER-12 VOLT #1052 (HAZARD)			1
22	61200709	RELAY - CONTROL			1
23	61370036	SCREW-MACHINE, TRUSS HEAD, PHILLIPS 8-32-x 5/8			1
24	61370038	NUT-LOCK W/ELASTIC 8-32			1
25	61370802	BOLT-HEX HEAD 1/4 x 20 x 3/4			2
26	62201134	BRACKET-RELAY MOUNTING			1
27	62201122	PANEL-CHASSIS ELECTRICAL SIDE			1
28	61480488	CLAMP-LOOM CUSHIONED 1.5 I.D.			1
29	61480489	CLAMP-LOOM CUSHIONED 1.25 I.D.			1
30	61370026	SCREW, MACHINE - #4-40 x 3/8	(DATA LINK)		
31	61370027	LOCKNUT - #4-40	(DATA LINK)		
32	62201855	HARNESS, DATA LINK			1

NEW SP JUMPERS REQ'D (CAT 3126)

1. #88 SIDE PANEL C.B. NO.8 (W/#3) TO SIDE PANEL TERMINAL BD. (POS. #88) W/#88A & #888
(OPT.) 2. #993H SIDE PANEL TERMINAL BD. (W/#993) TO BODY DOOR RELAY (87) ADA LIFT
(OPT.) 3. #211 SIDE PANEL C.B. NO.10 TO ALLISON AT/MT TRANS. SHIFT MODULATOR RELAY (30)
(OPT.) 4. #213 ALLISON AT/MT TRANS. SHIFT MODULATOR RELAY (86) TO SIDE PANEL GND STUD.

TERMINAL BD POSITIONS REQ'D (CAT 3126)

1. #993, 993A, 993B, 993C, 993D, 993E 993F, 383 (MD TRANS.)
2. #409, 384 (MD TRANS.)
3. #729A, 349, 151B (SIDE TERMINAL) - ATA- (DATA LINK)
4. #793A, 348, 142B (SIDE TERMINAL) - ATA+ (DATA LINK)

Thomas BUILT BUSES

62201801 A

ELECT. COMPONENT MOUNTING, SIDE PANEL LWP MODELS, CAT 3126 ENGINE (CHASSIS)

ITEM	QUANTITY	PART NUMBER	DESCRIPTION
1	9	61200104	CIRCUIT BREAKER - 20 AMPS SINGLE POLE, THERMAL TYPE, 12VDC, METAL COVER
2	2	61200105	CIRCUIT BREAKER - 35 AMPS SINGLE POLE, THERMAL TYPE, 12VDC, METAL COVER
3	1	61200109	HORN RELAY 12 VOLTS
4	3	61200129	BLOCK, JUNCTION - 10 POST FRONT ELECTRICAL CHASSIS
5	3	61200165	BUZZER, WARNING 12 VOLT D.C.
6	1	61200411	CONTACTOR, POWER, 12 VDC
7	1	61200413	FLASHER - 12V
8	2	61200414	CLIP - MOUNTING, FLASHER
9	1	61200435	FLASHER - 12 VOLT, TF1052-002 HAZARD WARNING (M-BODY TRANSIT)
10	1	61200463	STUD, ELECT. - MOUNTING TERMINAL BD., 3/8-16
11	6	61200709	RELAY - CONTROL WITH MTG. BRACKET, 40/20 AMP SPDT.
12	2	61200845	BRACKET, CIRCUIT BREAKER 6 POSITION
13	1	61201114	RELAY - CONTROL W/ MTG. BRACKET, COIL SUPPRESS 40 AMP, SPDT.
14	1	61201159	SOLID STATE FLASHER
15	7	61370036	SCREW - MACHINE, TRUSS HEAD, PHILLIPS (BLACK OXIDE)8-32 X 5/8"
16	7	61370038	LOCK NUT - NYLON INSERT #4-40, ZINC
17	3	61370050	NUT, HEX HEAD, GRADE 8
18	3	61370260	LOCKWASHER, 1/4 HELICAL SPRING REGULAR
19	22	61370334	SCREW-10 X 5/8
20	4	61370336	SCREW, TAP - 10 X 1/2 PHILLIPS, PAN HEAD, TYPE A
21	2	61370337	SCREW - SELF TAPPING, #10 X 1-1/4 PHILLIPS TRUSS HEAD, CAD/ZINC PLATE
22	2	61370802	BOLT, HEX HEAD, 1/4-20 X 3/4 COARSE THREAD
23	1	61370803	BOLT, HEX HEAD, 1/4-20 X 1 COARSE THREAD
24	1	61480488	CLAMP-LOOP, CUSHIONED,
25	1	61480489	CLAMP-LOOP-CUSHIONED .265 MOUNTING x .437 I.D.
26	1	62200640	DECAL - IDENTIFICATION, CIRCUIT PANEL, FRONT
27	2	62200727	BUSS BAR, 6 CIRCUIT
28	2	62200728	SPACER - RELAY
29	1	62201122	CHASSIS ELECTRICAL PANEL, LOW WINDSHIELD PUSHER
30	1	62201506	ANGLE, RELAY MOUNTING

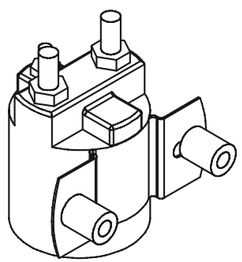

DETAIL A

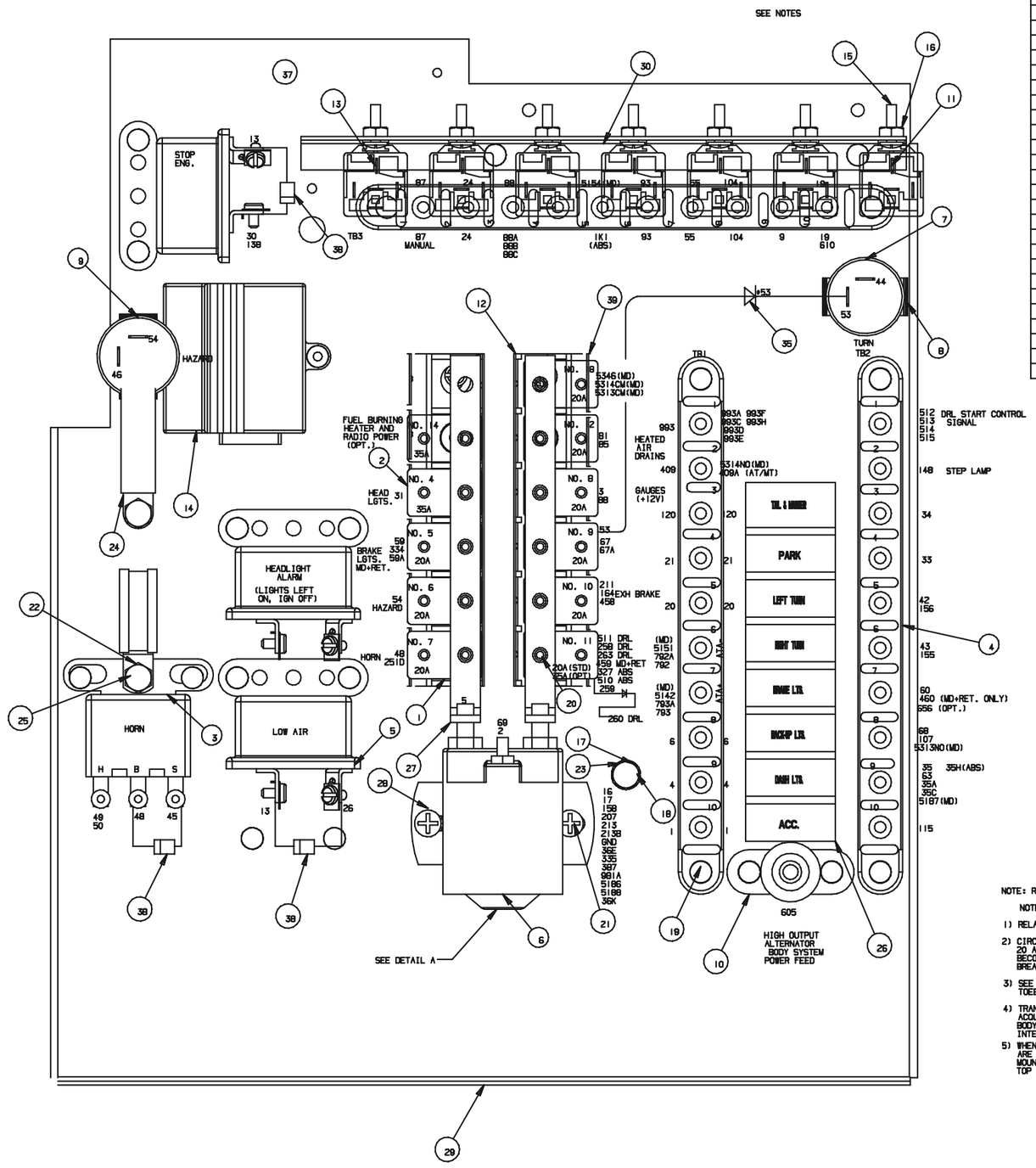

ITEMS NOT SHOWN			
ITEM	QUANTITY	PART NUMBER	DESCRIPTION
32	1	61200393	KYSOR COOLANT LEVEL ALARM MODULE C2607 (OPT)
33	3	61201114	RELAY-CONTROL, SUPPRESSED MD+RET. C6002 (OPT)
34	1	61201114	RELAY-CONTROL, SUPPRESSED EXH. BRAKE (OPT)
35	1	62200633	DIODE ASSEMBLY - ANTI-FEEDBACK (TURN SIG.)
36	1	61200709	RELAY-CONTROL, C2070 (OPT)
37	1	62202287	HARNESS, DATA LINK J1587/J1939
38	3	62201842	DIODE ASM. - HORN SUPPRESSOR
39	1	61200104	CIRCUIT BREAKER - 20 AMP MD (OPT)
40	4	61200709	RELAY CONTROL C3676 (OPT)
41	1	62202535	DIODE ASM., - ANTI-FEEDBACK, 6 AMP C3676 (OPT)
42	3	62200633	DIODE ASM., - ANTI-FEEDBACK, 6 AMP C3676 (OPT)
43	1	62200780	DIODE ASM., - ANTI-FEEDBACK, 35 AMP C3676 (OPT)

JUMPERS REQ'D (CAT 3126) SEE TBB ECM HARNESS

1) #88 SIDE PANEL C.B. NO. 8 (W/#3) TO SIDE PANEL TERMINAL BD. (POS. #86) W/#88A & #88B, #88C
(OPT.) 2) #993H SIDE PANEL TERMINAL BD. (W/#993) TO BODY DOOR RELAY (87) ADA LIFT
(OPT.) 3) #211 SIDE PANEL C.B. NO. 10 TO ALLISON AT/MT TRANS. SHIFT MODULATOR RELAY (30)
(OPT.) 4) #213 ALLISON AT/MT TRANS. SHIFT MODULATOR RELAY (86) TO SIDE PANEL GND STUD.
(OPT.) 5) #213B CHASSIS ACCELERATOR INTERLOCK RELAY (POS.86) TO SIDE PANEL GND STUD.
(OPT.) 6) #981A EXHAUST BRAKE RELAY (POS.86) TO SIDE PANEL GND STUD.
(OPT.) 7) #326 ABS RELAY (87A) TO ANTI-LOCK BRAKE HARNESS
#327 ABS HARNESS JUMPER FROM CB 11 TO ABS RELAY(30,85)
#1E3 FROM ABS HARNESS TO SIDE PANEL ABS RELAY (86)

NOTE: RELAY WIRING DETAIL SHOWN ON SHEET 2

NOTES:

1) RELAYS SHOWN SEPARATELY FOR CLARITY.

2) CIRCUIT BREAKER NO. 11 IS A (61200104) 20 AMP CIRCUIT BREAKER STANDARD, BUT BECOMES A (61200105) 35 AMP CIRCUIT BREAKER FOR OPTION C3676-06-000.

3) SEE DWG. 62202743 FOR SIDE PANEL TO TOEBOARD INSTALLATION.

4) TRANSMISSION NEUTRAL (+12VDC) SIGNAL IS ACQUIRED AT TB1-2 TERMINAL BOARD POSITION. BODY WIRES TO THIS POSITION FOR BRAKE INTERLOCK OPTION.

5) WHEN STANDARD MOUNTING POSITIONS ARE FILLED WITH RELAYS, MOUNT THE NEXT RELAY(S) ON TOP OF THE MOUNTING PLATE UPSIDE DOWN.

NOTES:
1) MATERIAL: N/A
2) BLANK SIZE: N/A
3) CALCULATED WEIGHT: N/A
4) BURR REQUIREMENT: N/A
5) FINISH: N/A
6) COLOR: N/A
7) TENSILE AND/OR IMPACT STRENGTH: N/A
8) HIGH/LOW TEMPERATURE PERFORMANCE: N/A
9) SURFACE GRAIN TEXTURE: N/A

Thomas BUILT BUSES

62202210 M

ELECT. DIAGRAM COMPONENT MOUNTING, SIDE PANEL, 98 CAT 3126 ENGINE (CHASSIS)

Sheet 1 of 2

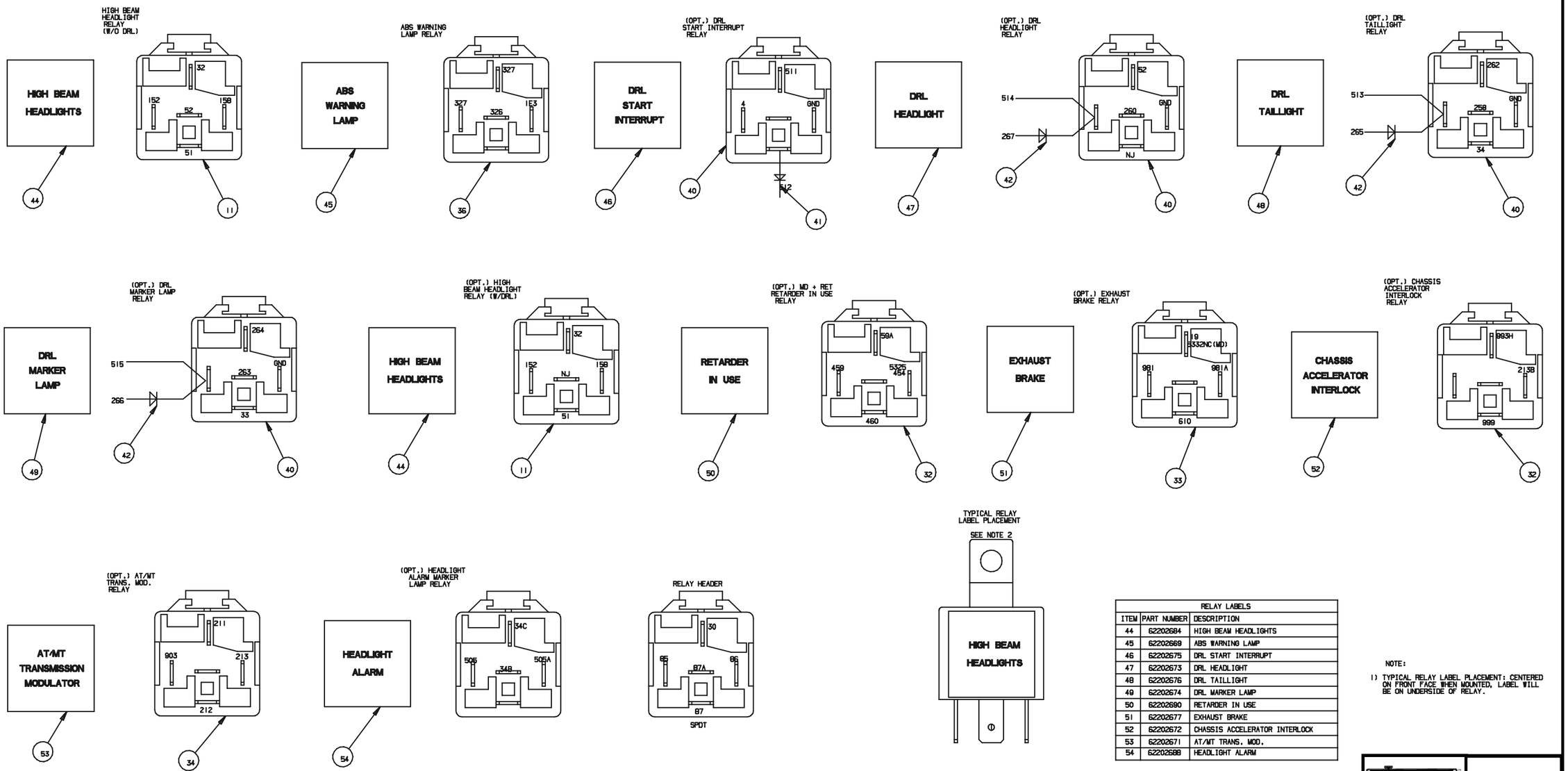

RELAY LABELS		
ITEM	PART NUMBER	DESCRIPTION
44	62202684	HIGH BEAM HEADLIGHTS
45	62202669	ABS WARNING LAMP
46	62202675	DRL START INTERRUPT
47	62202673	DRL HEADLIGHT
48	62202676	DRL TAILLIGHT
49	62202674	DRL MARKER LAMP
50	62202690	RETARDER IN USE
51	62202677	EXHAUST BRAKE
52	62202672	CHASSIS ACCELERATOR INTERLOCK
53	62202671	AT/MT TRANS. MOD.
54	62202688	HEADLIGHT ALARM

NOTE:

1) TYPICAL RELAY LABEL PLACEMENT: CENTERED ON FRONT FACE WHEN MOUNTED. LABEL WILL BE ON UNDERSIDE OF RELAY.

Sheet 2 of 2

Thomas BUILT BUSES

62202210 M

ELECT. DIAGRAM COMPONENT MOUNTING, SIDE PANEL, 98 CAT 3126 ENGINE (CHASSIS)

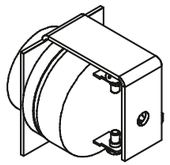

DETAIL B

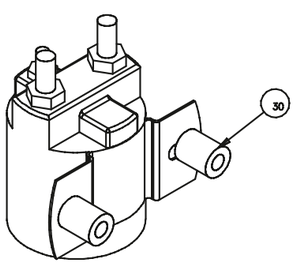

DETAIL A

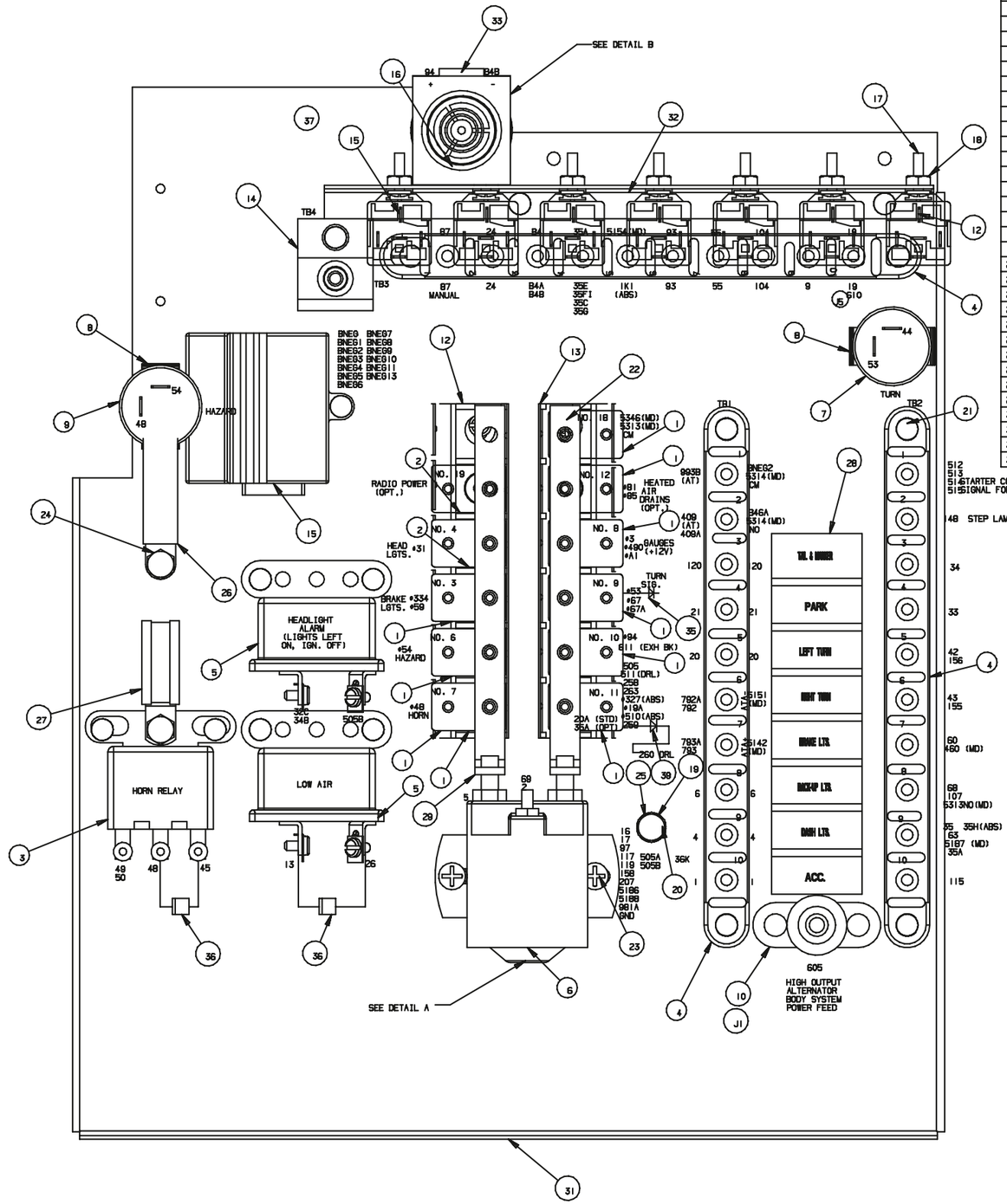

ITEM	QUANTITY	PART NUMBER	DESCRIPTION
1	9	61200104	CIRCUIT BREAKER - 20 AMPS SINGLE POLE, THERMAL TYPE, 12VDC, METAL COVER
2	2	61200105	CIRCUIT BREAKER - 35 AMPS SINGLE POLE, THERMAL TYPE, 12VDC, METAL COVER
3	1	61200109	
4	3	61200129	BLOCK, JUNCTION - 10 POST FRONT ELECTRICAL CHASSIS
5	2	61200165	BUZZER, WARNING 12 VOLT D.C.
6	1	61200411	CONTACTOR, POWER, 12 VDC
7	1	61200413	
8	2	61200414	CLIP - MOUNTING, FLASHER
9	1	61200435	FLASHER - 12 VOLT, TF1052-002 HAZARD WARNING (M-BODY TRANSIT)
10	1	61200463	STUD, ELECT. - MOUNTING TERMINAL BD., 3/8-16
11	6	61200709	RELAY - CONTROL WITH MTG. BRACKET, 40/20 AMP SPDT.
12	2	61200845	BRACKET, CIRCUIT BREAKER 6 POSITION
13	1	61200874	TERMINAL BD. - SINGLE POST STUD SIZE - 1/4-20
14	1	61201114	RELAY - CONTROL WITH MTG. BRACKET, 40/20 AMP SPDT.
15	1	61201159	SOLID STATE FLASHER
16	1	61230350	WARNING BUZZER - ELECTRONIC
17	7	61370036	
18	7	61370038	LOCK NUT - NYLON INSERT #4-40, ZINC
19	3	61370050	NUT, HEX HEAD, GRADE 8
20	3	61370260	LOCKWASHER, 1/4 HELICAL SPRING REGULAR
21	20	61370334	SCREW-10 X 5/8
22	4	61370336	SCREW, TAP - 10 X 1/2 PHILLIPS, PAN HEAD, TYPE A
23	2	61370337	
24	2	61370802	BOLT, HEX HEAD, 1/4-20 X 3/4 COARSE THREAD
25	1	61370803	BOLT, HEX HEAD, 1/4-20 X 1 COARSE THREAD
26	1	61480488	CLAMP-LOOP, CUSHIONED,
27	1	61480489	CLAMP-LOOP-CUSHIONED .265 MOUNTING x .437 I.D.
28	1	62200640	DECAL - IDENTIFICATION, CIRCUIT PANEL, FRONT
29	2	62200727	
30	2	62200728	
31	1	62201122	CHASSIS ELECTRICAL PANEL, LOW WINDSHIELD PUSHER
32	1	62201506	
33	1	62230531	BRACKET MTG. - ELECTRONIC WARNER BUZZER

ITEMS NOT SHOWN			
ITEM	QUANTITY	PART NUMBER	DESCRIPTION
34	1	61200393	KYSOR COOLANT LEVEL MODULE C2607 (OPT.)
35	1	62200633	DIODE ASSEMBLY - ANTI FEEDBACK (TURN SIG.)
36	2	62201842	DIODE ASSY, HORN RELAY SUPPRESSOR
37	1	62202287	HARNESS, DATA LINK J1587/J1939
38	1	61200104	CIRCUIT BREAKER - 20 AMPERE MD (OPT.)
39	1	62202535	DIODE ASM. - ANTI-FEEDBACK, 6 AMP C3676 (OPT.)
40	3	62200633	DIODE ASM. - ANTI-FEEDBACK, 6 AMP C3676 (OPT.)
41	1	62200780	DIODE ASM. - ANTI-FEEDBACK, 35 AMP C3676 (OPT.)

NOTE: RELAY WIRING AND LABEL PLACEMENT DETAIL SHOWN ON SHEET 2.

NOTES:

1) RELAYS SHOWN SEPARATELY FOR CLARITY.

2) CIRCUIT BREAKER NO. 11 IS A (61200104) 20 AMP CIRCUIT BREAKER STANDARD, BUT BECOMES A (61200105) 35 AMP CIRCUIT BREAKER FOR OPTIONS C3676-00-000, OR C3676-06-000.

3) TRANSMISSION NEUTRAL (GROUND) SIGNAL IS ACQUIRED AT TB1-2 TERMINAL BOARD POSITION. BODY WIRES TO THIS POSITION FOR BRAKE INTERLOCK OPTION.

4) SEE DWG.. 62202788 FOR SIDE PANEL TO TOEBOARD INSTALLATION.

NOTES:
1) MATERIAL: N/A
2) BLANK SIZE: N/A
3) CALCULATED WEIGHT: N/A
4) BURR REQUIREMENT: N/A
5) FINISH: N/A
6) COLOR: N/A
7) TENSILE AND/OR IMPACT STRENGTH: N/A
8) HIGH/LOW TEMPERATURE PERFORMANCE: N/A
9) SURFACE GRAIN TEXTURE: N/A

Thomas BUILT BUSES

62202311 M

Sheet 1 of 2

ELECT. DIAGRAM COMPONENT MOUNTING, SIDE PANEL, 98 CUMMINS ISB/ISC (CHASSIS)

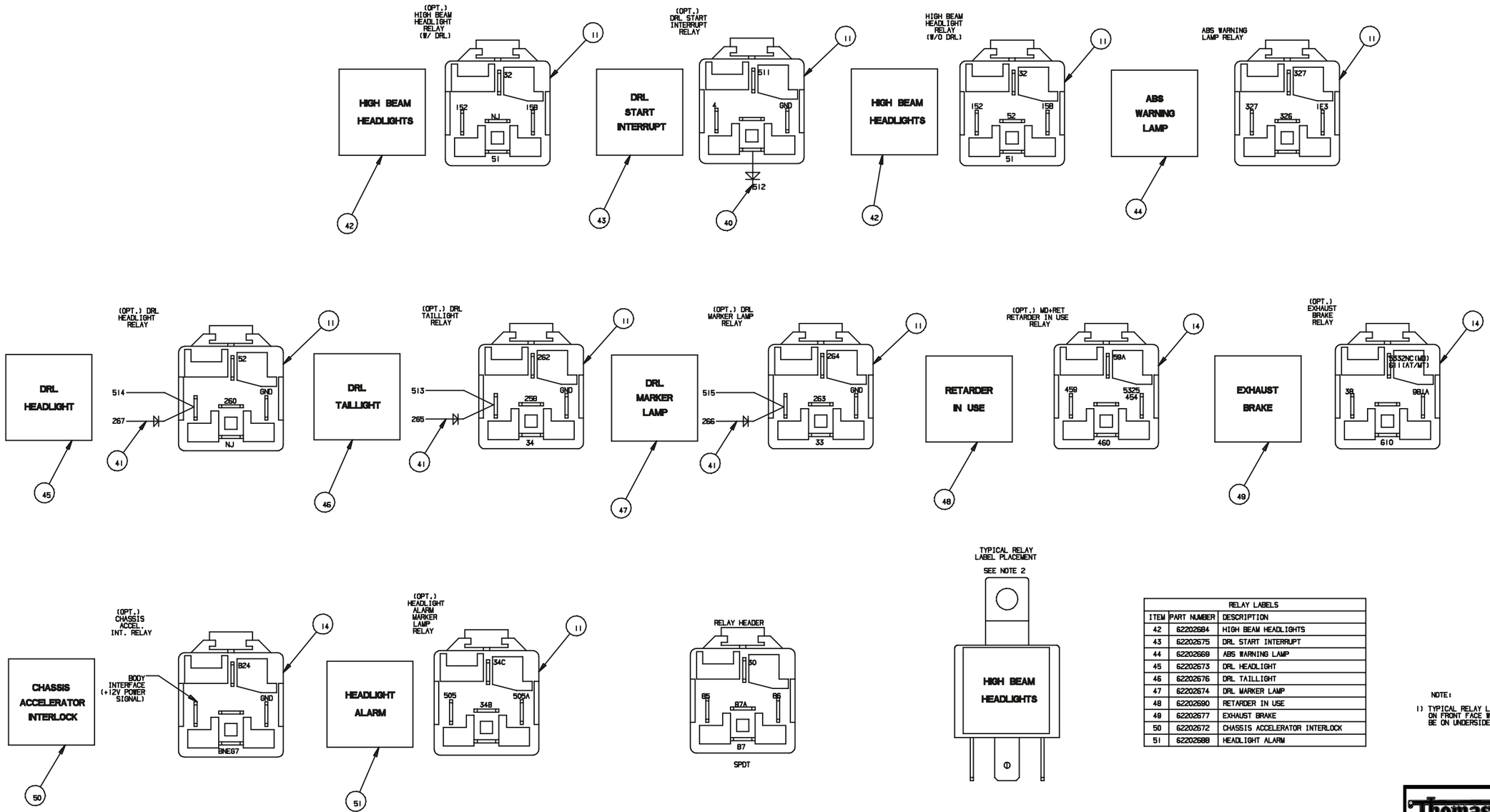

RELAY LABELS		
ITEM	PART NUMBER	DESCRIPTION
42	62202684	HIGH BEAM HEADLIGHTS
43	62202675	DRL START INTERRUPT
44	62202669	ABS WARNING LAMP
45	62202673	DRL HEADLIGHT
46	62202676	DRL TAILLIGHT
47	62202674	DRL MARKER LAMP
48	62202690	RETARDER IN USE
49	62202677	EXHAUST BRAKE
50	62202672	CHASSIS ACCELERATOR INTERLOCK
51	62202688	HEADLIGHT ALARM

NOTE:

1) TYPICAL RELAY LABEL PLACEMENT: CENTERED ON FRONT FACE WHEN MOUNTED, LABEL WILL BE ON UNDERSIDE OF RELAY.

Thomas BUILT BUSES

62202311 M

Sheet 2 of 2

ELECT. DIAGRAM COMPARTMENT MOUNTING, SIDE PANEL, 98 CUMMINS ISB/ISC (CHASSIS)

FASTENER REQMTS (STANDARD) QTY PER ITEM	FASTENER PART NO.	QTY.	PART NO.	DESCRIPTION	ITEM
-	-	1	62201573	PANEL, INNER ELECTRICAL, MOD. REAR BOX, MVP-ER	1
1	61370334	3	61200709	RELAY - CONTROL, SPDT	2
2	61370334	3	61201491	BLOCK, JUNCTION - 8 POST FRONT ELECTRICAL CHASSIS	3
4	61370385	1	61201062	FUSE PANEL 6/8 POSITION	4
2	61370334	3	61200463	STUD, ELECTRICAL MTG.	5
2	61370337	1	61200728	SHUNT, 150 AMP. - 50 MILLIVOLT	6
-	-	2	61200343	FUSE - 5 AMP.	7
-	-	1	61200953	CIRCUIT BREAKER - 8 AMP.	8
-	-	4	61200936	CIRCUIT BREAKER - 10 AMP.	9
-	-	1	61200871	CIRCUIT BREAKER - 20 AMP.	10
-	-	1	61200872	CIRCUIT BREAKER - 30 AMP.	11
-	-	1	61200163	CABLE ENTRY SEAL, 1.5" I.D. (NOT SHOWN)	12
-	-	1	62210087	DIODE/WIRE ASM., ALTERNATOR (DELCO)	13
-	-	1	62201309	CABLE, AMMETER SHUNT (OPT.)	14
-	-	1	61200772	FUSE, 2 AMP (NOT SHOWN) #310	15
-	-	1	61200159	FUSEHOLDER (NOT SHOWN) #310	16
-	-	1	61200938	TERMINAL BD. - 4 POS. (BAT PWR)	17
-	-	1	62201732	HARNESS, DATA LINK	18
-	-	1	62202329	BRACKET, MTG - DATA LINK PLUG (NOT SHOWN)	19
-	-	4	61370026	SCREW, MACHINE - #4 - 40 x 3/8 (NOT SHOWN)	20
-	-	4	61370027	LOCKNUT - #4 - 40 (NOT SHOWN)	21

CIRCUITS NOT USED (ENG. HARNESS)

72	245	256
88	247	250A
89	252	302
91	253	250
93	255	251

CIRCUITS NOT USED (BOX JUMPERS)

72	241
89	242
161	240
238	
160	

HARNESS NOT USED

62201452 - CAT 3116 ENG. MAN HTR PILOT LAMP
#250D, #251D

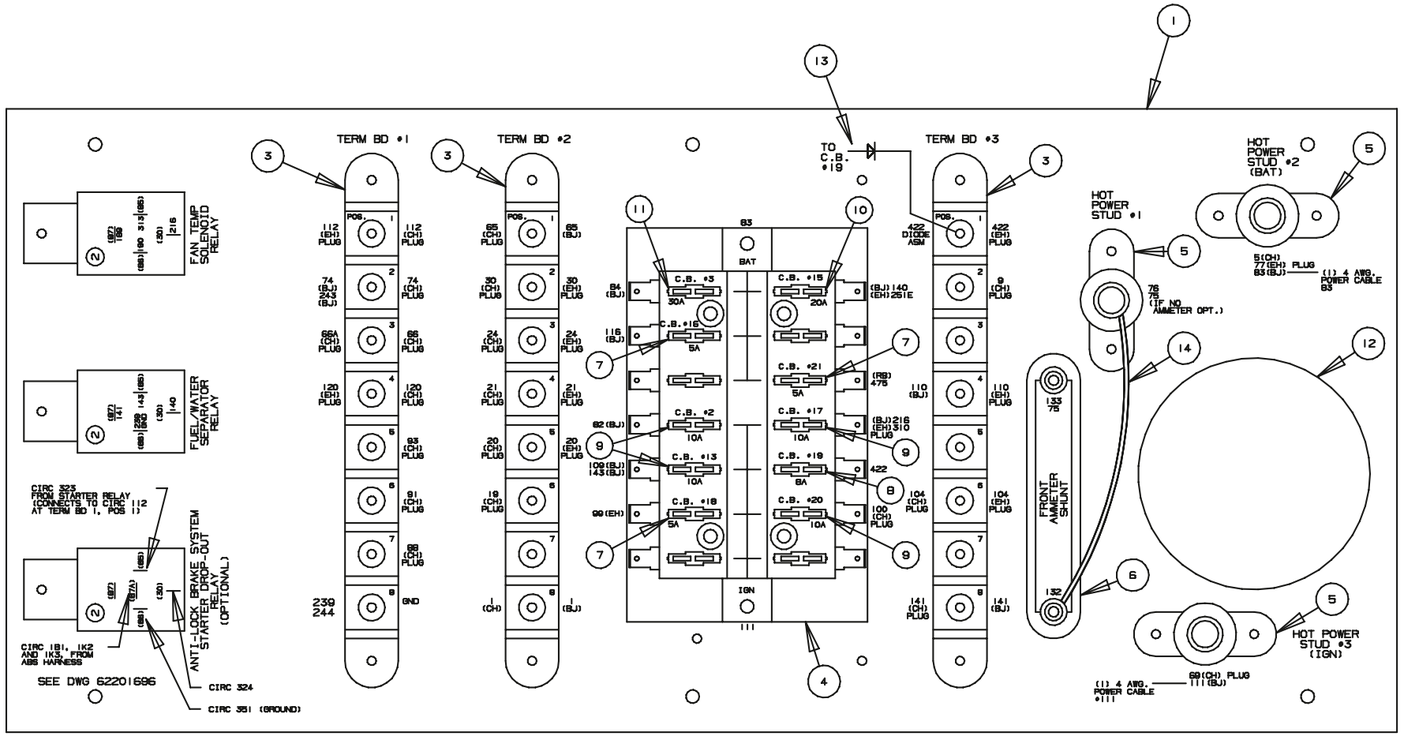

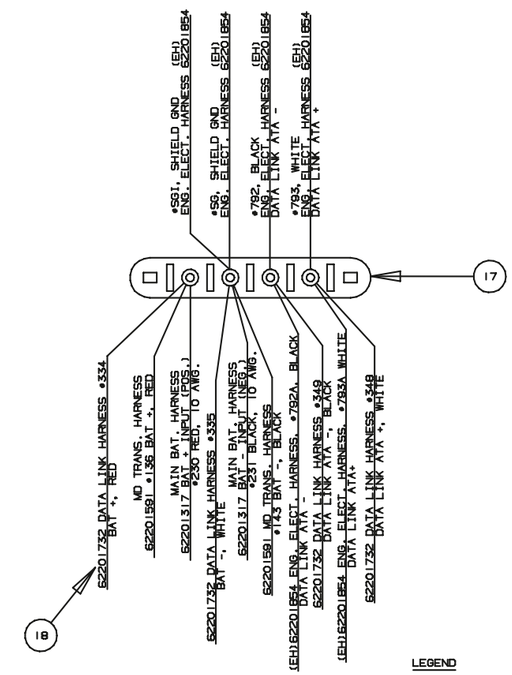

LEGEND

(CH) - CENTER HARNESS
(EH) - ENGINE HARNESS
(BJ) - MOD. BOX JUMPER
(BD) - BODY DROP-OUT OF REAR BOX
(RB) - ROLL-BACK HARNESS (OPT)

GND STUD IN MOD. REAR BOX

#106(EH)
#236(BJ)
#244(BJ)
#213A(EH)
#313(BJ)
#452A(EH)
#477 (RB) (OPT)

Thomas BUILT BUSES

62201802 G

ELECT. DIAGRAM MODULAR BOX COMPARTMENT MOUNTING, CAT 3126 ENGINE (CHASSIS)

DETAIL A

FAN TEMP SOLENOID RELAY

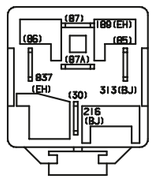

DETAIL B

FUEL/WATER SEPARATOR RELAY (OPT.)

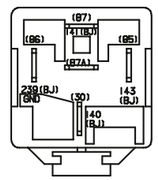

DETAIL C

ABS START INTERLOCK RELAY

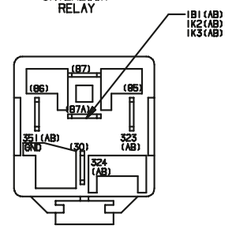

ITEM	QUANTITY	PART NUMBER	DESCRIPTION
1	1	61200100	START SWITCH
2	2	61200116	SWITCH, TOGGLE, SPST
3	3	61200130	BLOCK, JUNCTION - 8 POST
4	1	61200163	SEAL, CABLE ENTRY, 1 1/2 IN.
5	1	61200218	GAUGE - 2 INCH
6	3	61200343	FUSE - 5 AMP
7	1	61200411	CONTACTOR, POWER, 12 VDC
8	2	61200463	STUD, ELECT. - MOUNTING
9	3	61200709	RELAY - CONTROL
10	1	61201062	FUSE PANEL - 14 POSITION
11	1	61201095	CIRCUIT BREAKER - 150 AMP
12	1	61201433	SHUNT, AMMETER, 300 AMP
13	1	61201434	JUNCTION BLOCK, 5 POST,
14	1	61201442	CIRCUIT BREAKER, 8 AMP
15	4	61201443	CIRCUIT BREAKER, 10 AMP
16	2	61201445	CIRCUIT BREAKER, 20 AMP
17	2	61201447	CIRCUIT BREAKER, 30 AMP
18	1	61201449	STUD, ELECT. - MOUNTING
19	4	61370026	SCREW - MACHINE, #4-40 X 3/8
20	4	61370027	LOCK NUT - NYLON INSERT
21	2	61370036	SCREW-MACHINE, TRUSS HEAD,
22	2	61370039	NUT-LOCK W/ ELASTIC
23	1	62201573	PANEL, INNER ELECTRICAL
24	1	62202087	BRACKET-MTG., OFF BOARD
25	1	62202668	CHART, RELAY LABELS
26	1	62202678	CHART, RELAY LABELS
27	1	62202680	CHART, RELAY LABELS
28	1	62202884	ELECTRICAL BOX, MODULAR REAR

NOTE: ADDITIONAL PARTS SHOWN ON SHEETS 2 AND 3

ITEMS NOT SHOWN			
ITEM	QUANTITY	PART NUMBER	DESCRIPTION
29	1	62202615	DIODE WIRE ASM. MOD BOX

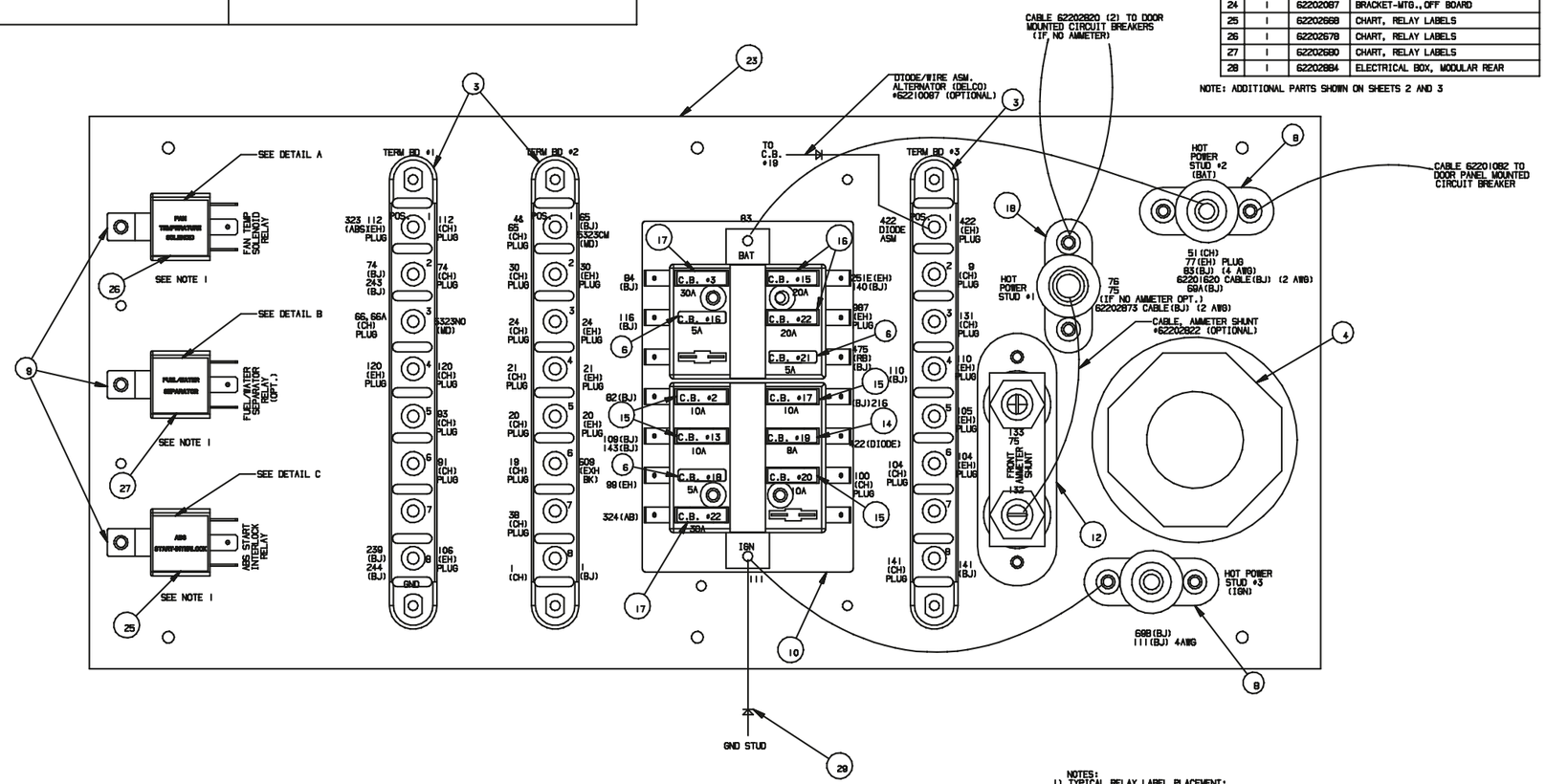

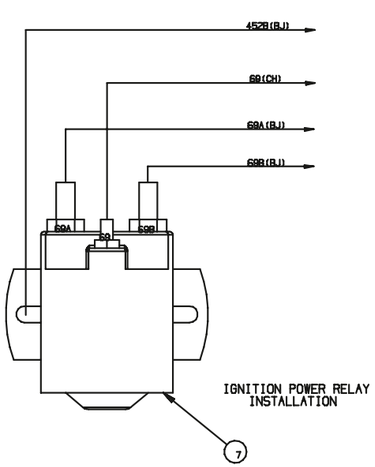

IGNITION POWER RELAY INSTALLATION

NOTES:
1) TYPICAL RELAY LABEL PLACEMENT: CENTERED ON FRONT FACE OF RELAY, TO READ PARALLEL TO GROUND WHEN MOUNTED.

LEGEND

(CH) - CENTER HARNESS
(EH) - ENGINE HARNESS
(BJ) - MOD. BOX JUMPER
(BD) - BODY DROP-OUT OF REAR BOX
(RB) - ROLL-BACK HARNESS (OPT)
(AB) - ABS
(MD) - WTEC III

Sheet 1 of 3

Thomas BUILT BUSES

62202914 B

ELECT. DIAGRAM MOD. BOX COMP. MTG. 98 CAT 3126 ENGINE (CHASSIS)

Effective Date: 04/27/99

End Date: 06/02/99

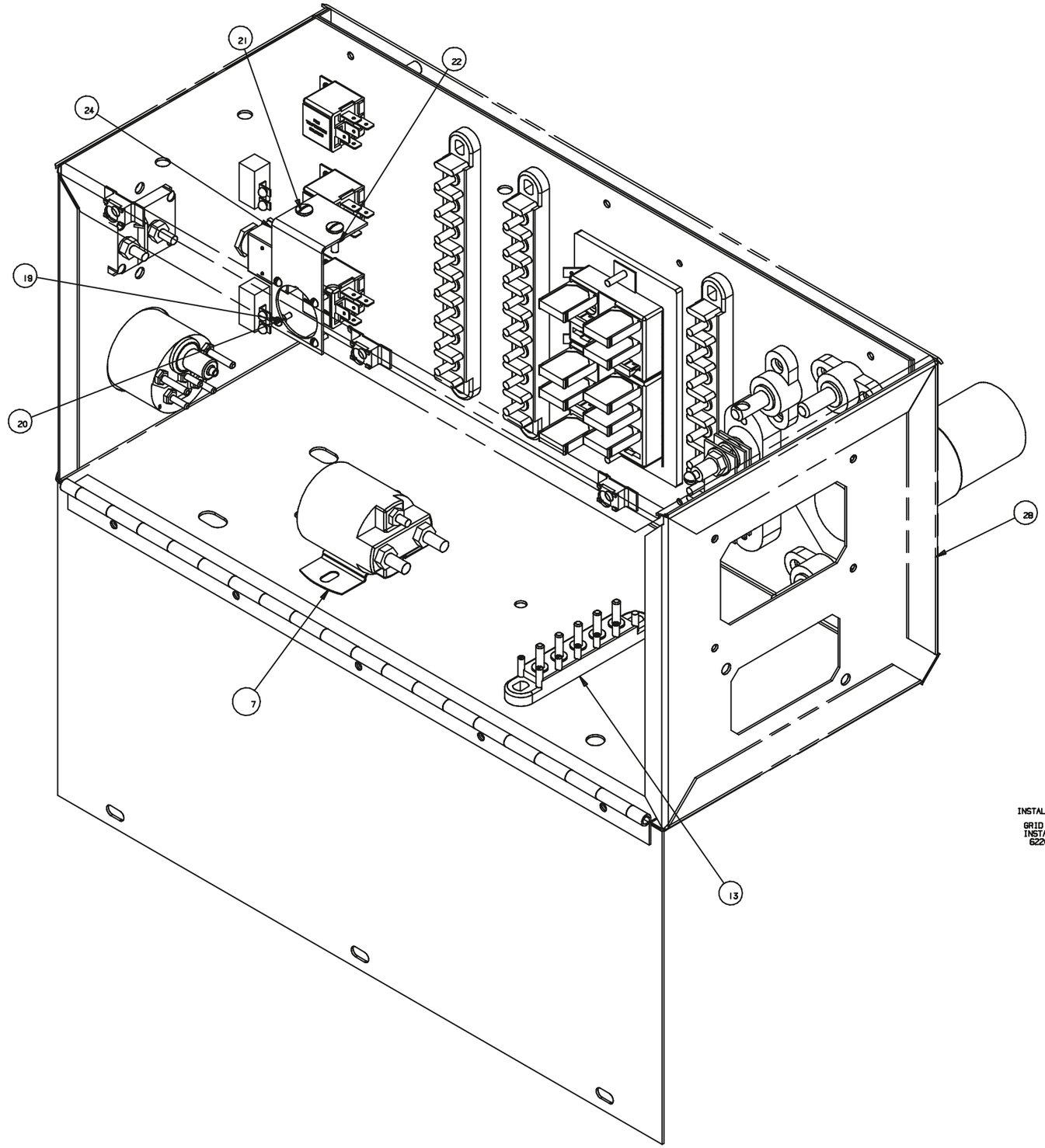

INSTALLATION OF DATA-LINK BRACKET

GRID HTR MTG. BRACKET INSTALLATION, SEE DWG. 62202301.

Thomas BUILT BUSES

62202914 B

Sheet 2 of 3

ELECT. DIAGRAM MOD. BOX COMP. MTG. 98 CAT 3126 ENGINE (CHASSIS)

Effective Date: 04/27/99

End Date: 06/02/99

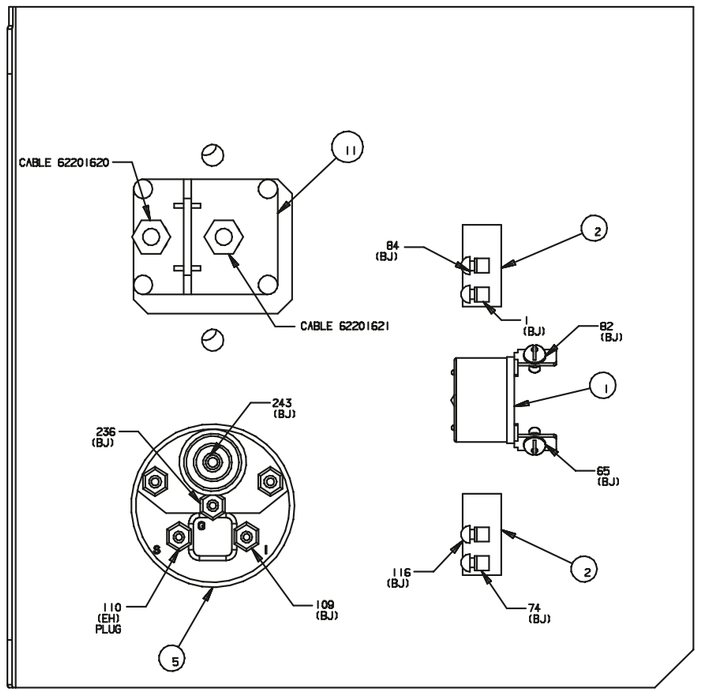

REAR BOX: BACK PANEL
VIEWED FROM INSIDE BOX

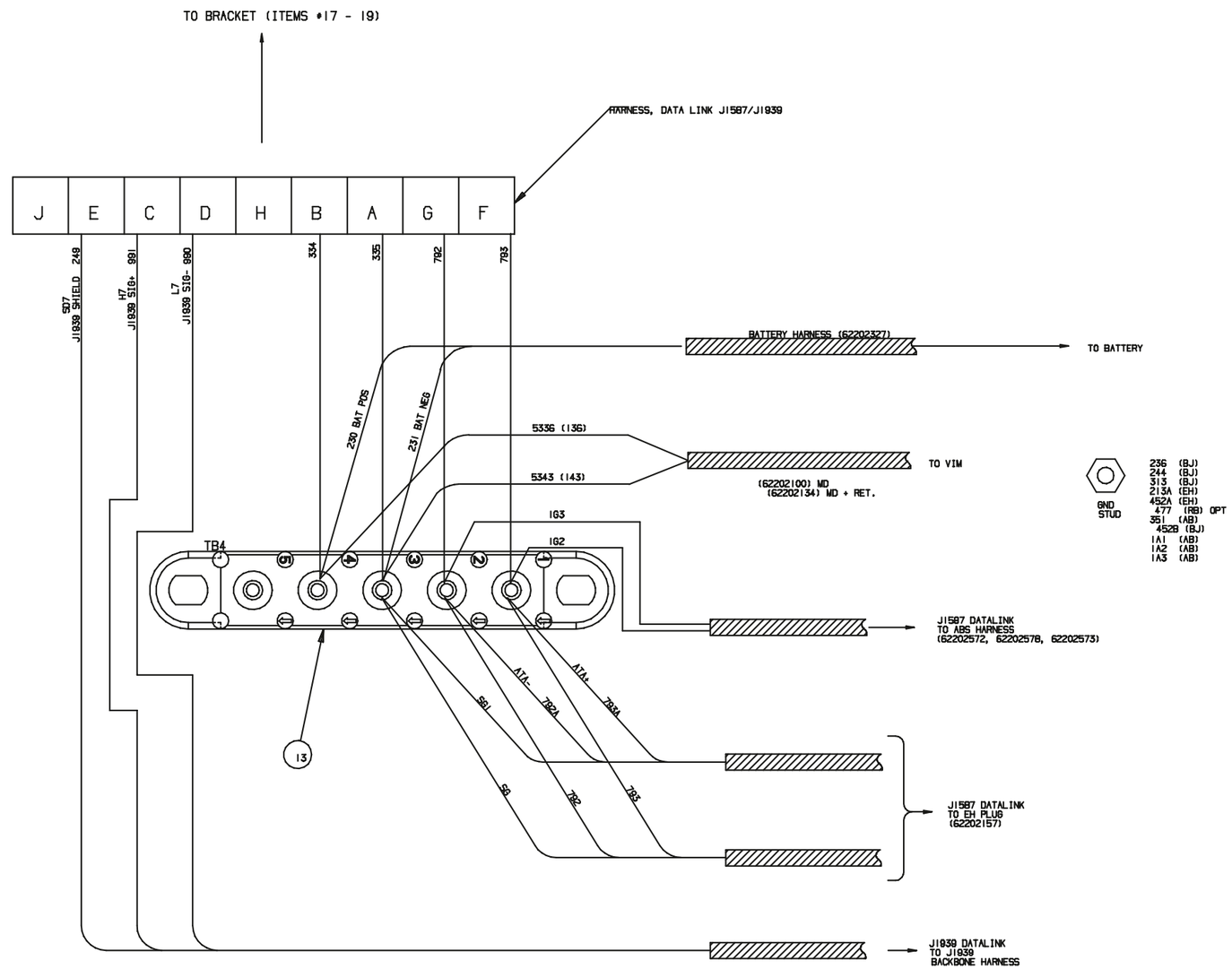

ON BOTTOM OF BOX

Sheet 3 of 3

Thomas BUILT BUSES

62202914 B

ELECT. DIAGRAM MOD. BOX COMP. MTG. 98 CAT 3126 ENGINE (CHASSIS)

Effective Date: 04/27/99

End Date: 06/02/99

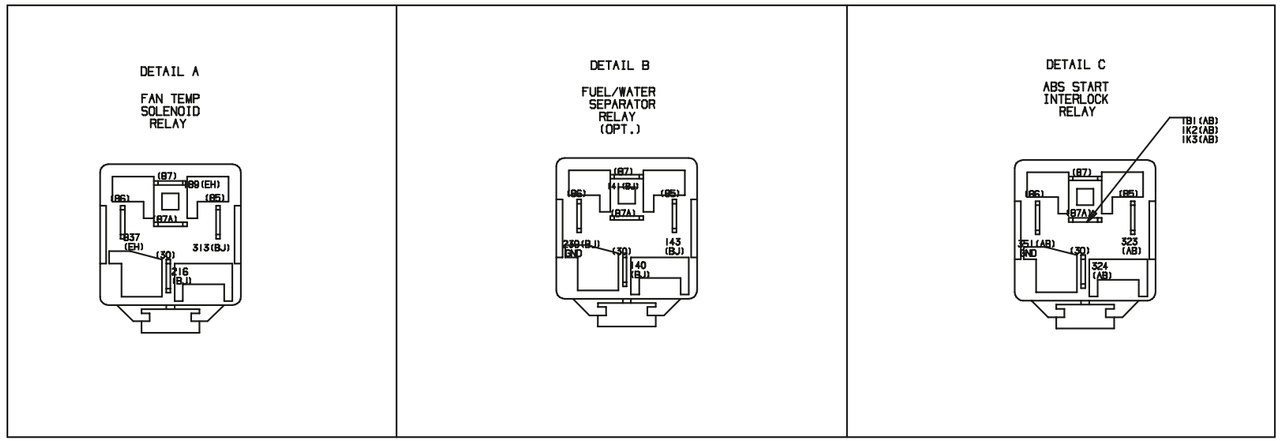

ITEMS NOT SHOWN			
ITEM	QUANTITY	PART NUMBER	DESCRIPTION
40	1	62202615	DIODE WIRE ASM. MOD BOX

ITEM	QUANTITY	PART NUMBER	DESCRIPTION
1	1	61200100	START SWITCH
2	2	61200116	SWITCH, TOGGLE, SPST
3	3	61200130	BLOCK, JUNCTION - 8 POST
4	1	61200163	SEAL, CABLE ENTRY, 1 1/2 IN.
5	1	61200218	GAUGE - 2 INCH
6	3	61200343	FUSE - 5 AMP
7	1	61200411	CONTACTOR, POWER, 12 VDC
8	2	61200463	STUD, ELECT. - MOUNTING
9	4	61200709	RELAY - CONTROL
10	1	61201062	FUSE PANEL - 14 POSITION
11	2	61201095	CIRCUIT BREAKER - 150 AMP
12	1	61201284	TERMINAL BOARD, FEED-
13	1	61201433	SHUNT, AMMETER, 300 AMP
14	1	61201434	JUNCTION BLOCK, 5 POST,
15	1	61201442	CIRCUIT BREAKER, 8 AMP
16	5	61201443	CIRCUIT BREAKER, 10 AMP
17	2	61201445	CIRCUIT BREAKER, 20 AMP
18	2	61201447	CIRCUIT BREAKER, 30 AMP
19	4	61370026	SCREW - MACHINE, #4-40 X 3/8
20	4	61370027	LOCK NUT - NYLON INSERT
21	2	61370036	SCREW-MACHINE, TRUSS HEAD,
22	2	61370038	NUT-LOCK W/ ELASTIC
23	4	61370040	NUT, HEX HEAD, GRADE 8
24	3	61370050	NUT, HEX HEAD, GRADE 8
25	2	61370063	NUT, HEX HEAD, GRADE 8
26	2	61370083	NUT, HEX HEAD, GRADE 8
27	3	61370260	LOCKWASHER, 1/4
28	2	61370266	LOCKWASHER, 3/8
29	2	61370271	LOCKWASHER, 1/2
30	15	61370334	SCREW-10 X 5/8
31	2	61370337	SCREW - SELF TAPPING, #10 X 1-1/4
32	2	61370802	BOLT, HEX HEAD, 1/4-20 X 3/4
33	1	61370803	BOLT, HEX HEAD, 1/4-20 X 1
34	3	61370850	3/16 - 1 IN. PHILLIPS ROUND HEAD
35	1	62202087	BRACKET-MTG.,OFF BOARD
36	1	62202668	CHART, RELAY LABELS
37	1	62202678	CHART, RELAY LABELS
38	1	62202680	CHART, RELAY LABELS
39	1	62202962	ELECTRICAL BOX, MODULAR REAR

NOTE: ADDITIONAL PARTS SHOWN ON SHEETS 2 AND 3

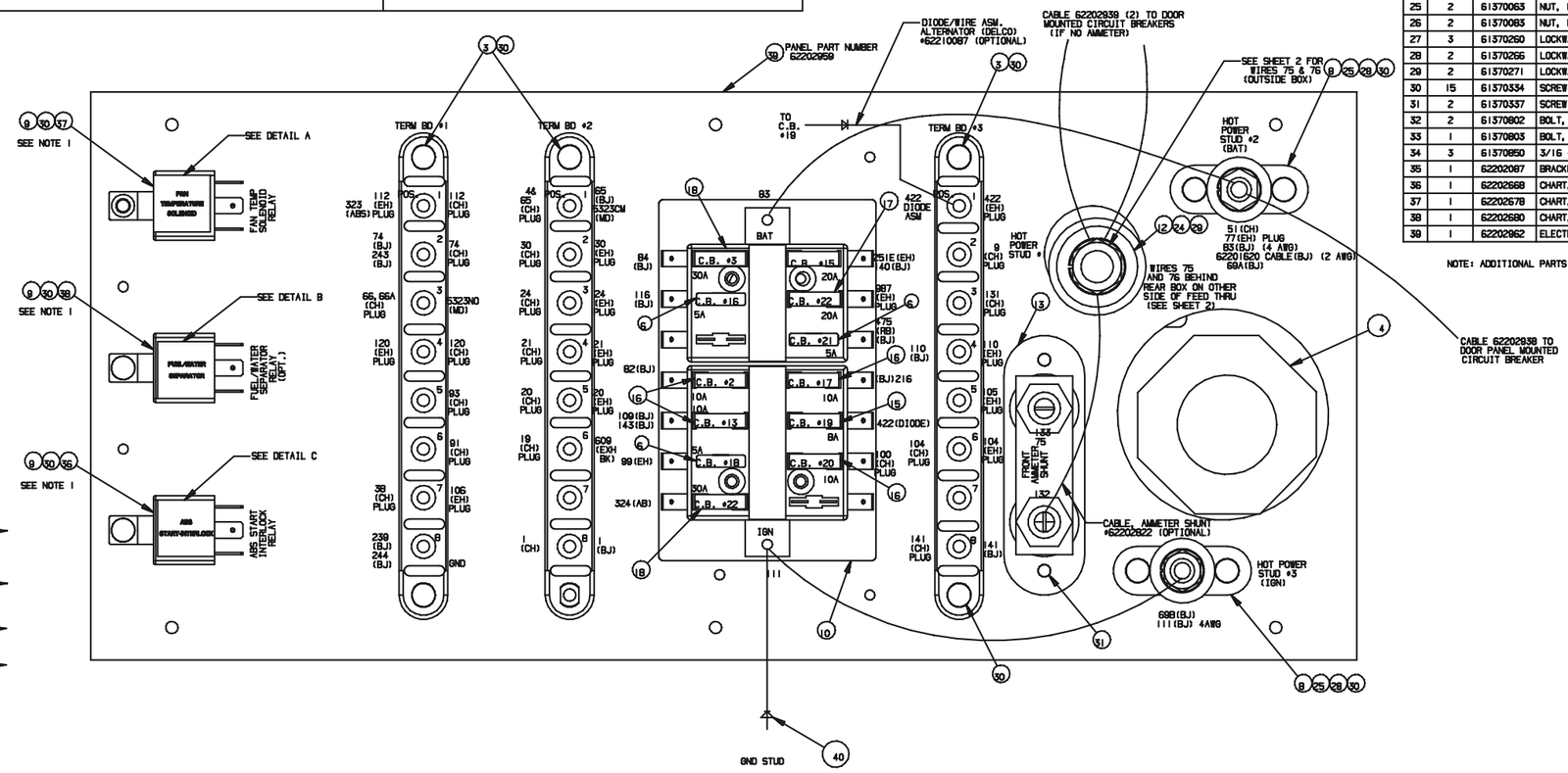

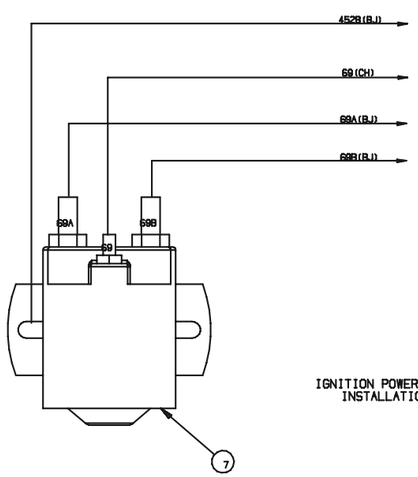

IGNITION POWER RELAY INSTALLATION

NOTES:
1) TYPICAL RELAY LABEL PLACEMENT: CENTERED ON FRONT FACE OF RELAY, TO READ PARALLEL TO GROUND WHEN MOUNTED.

LEGEND

(CH) - CENTER HARNESS
(EH) - ENGINE HARNESS
(BJ) - MOD. BOX JUMPER
(BD) - BODY DROP-OUT OF REAR BOX
(RB) - ROLL-BACK HARNESS (OPT)
(AB) - ABS
(MD) - WTEC III

Sheet 1 of 3

Thomas BUILT BUSES

62202957 A

ELECT. DIAGRAM MOD. BOX COMPONENT MTG. 98 CAT 3126 (CHASSIS)

Effective Date: 06/03/99

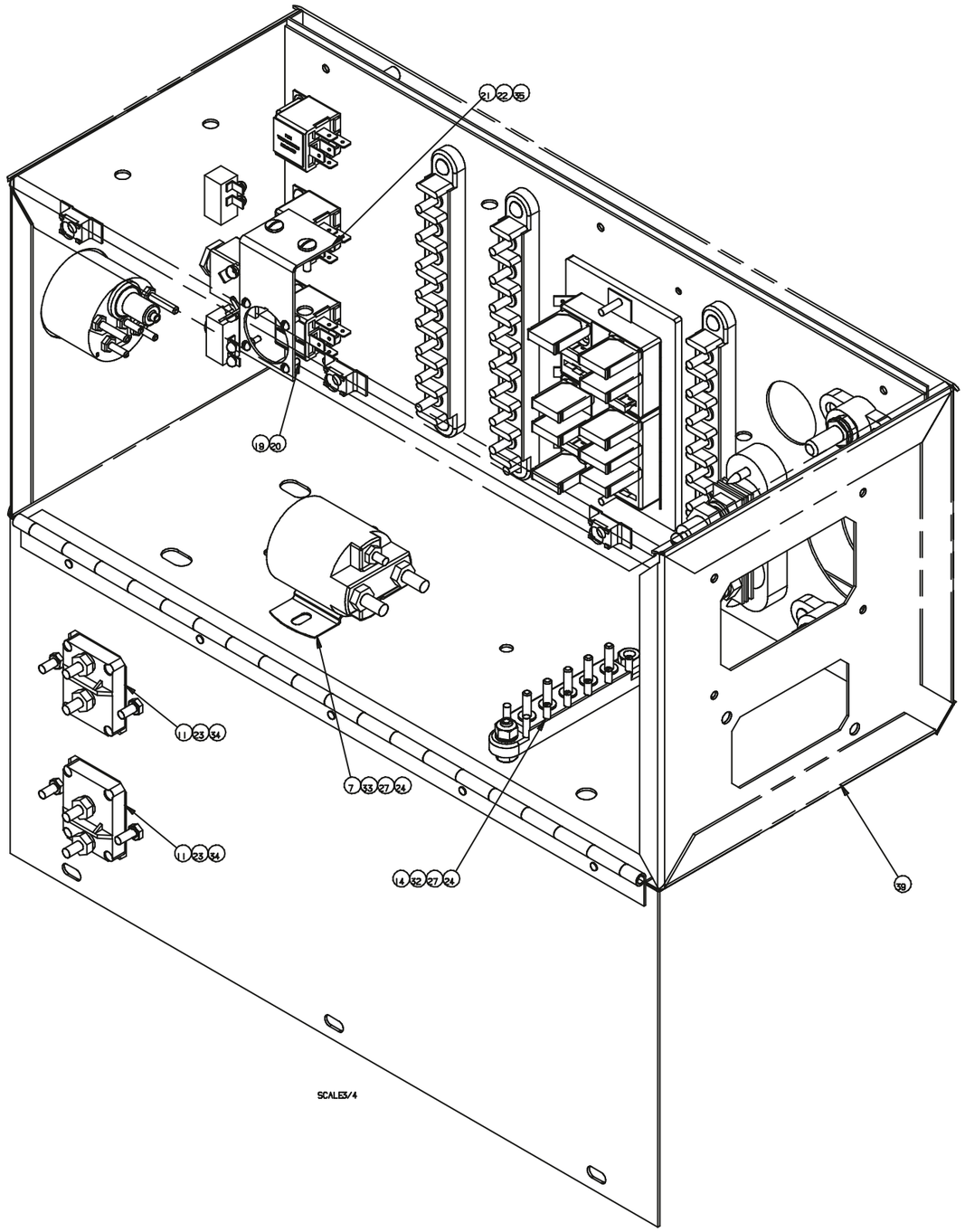

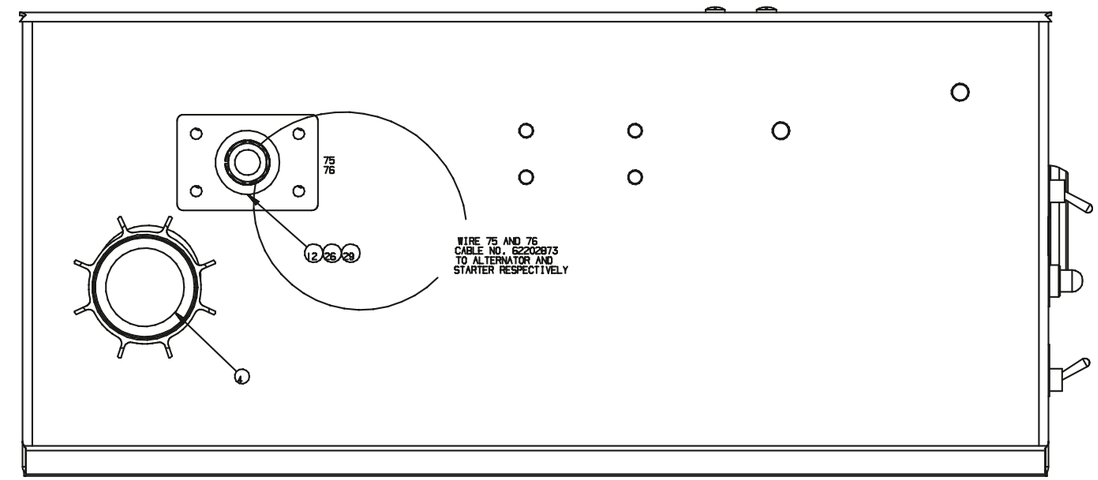

VIEW FROM BACK
SCALE3/4

INSTALLATION OF DATA-LINK BRACKET

GRID HTR MTG. BRACKET
INSTALLATION, SEE DWG.
62202301.

Thomas BUILT BUSES

62202957 A

ELECT. DIAGRAM MOD. BOX COMPON. MTG. 98 CAT 3126 (CHASSIS)

Effective Date: 06/03/98

Sheet 2 of 3

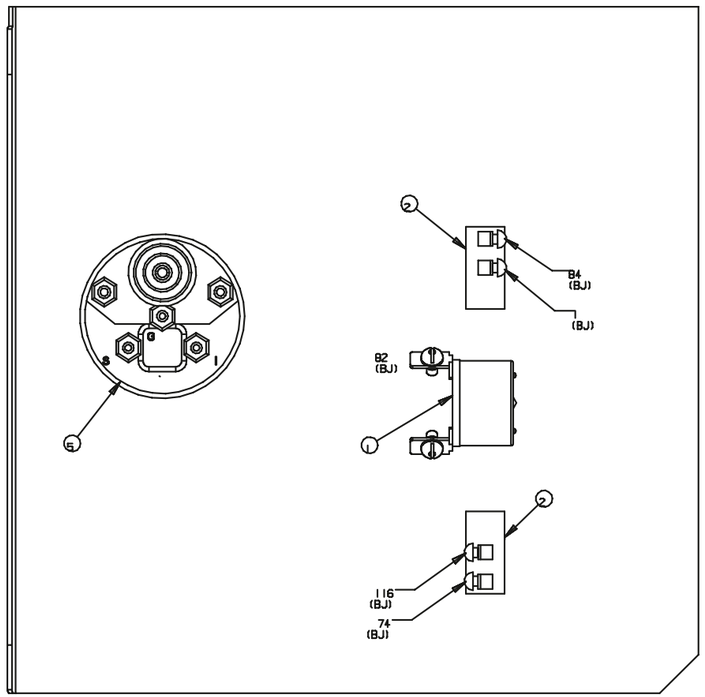

REAR BOX: BACK PANEL
VIEWED FROM INSIDE BOX

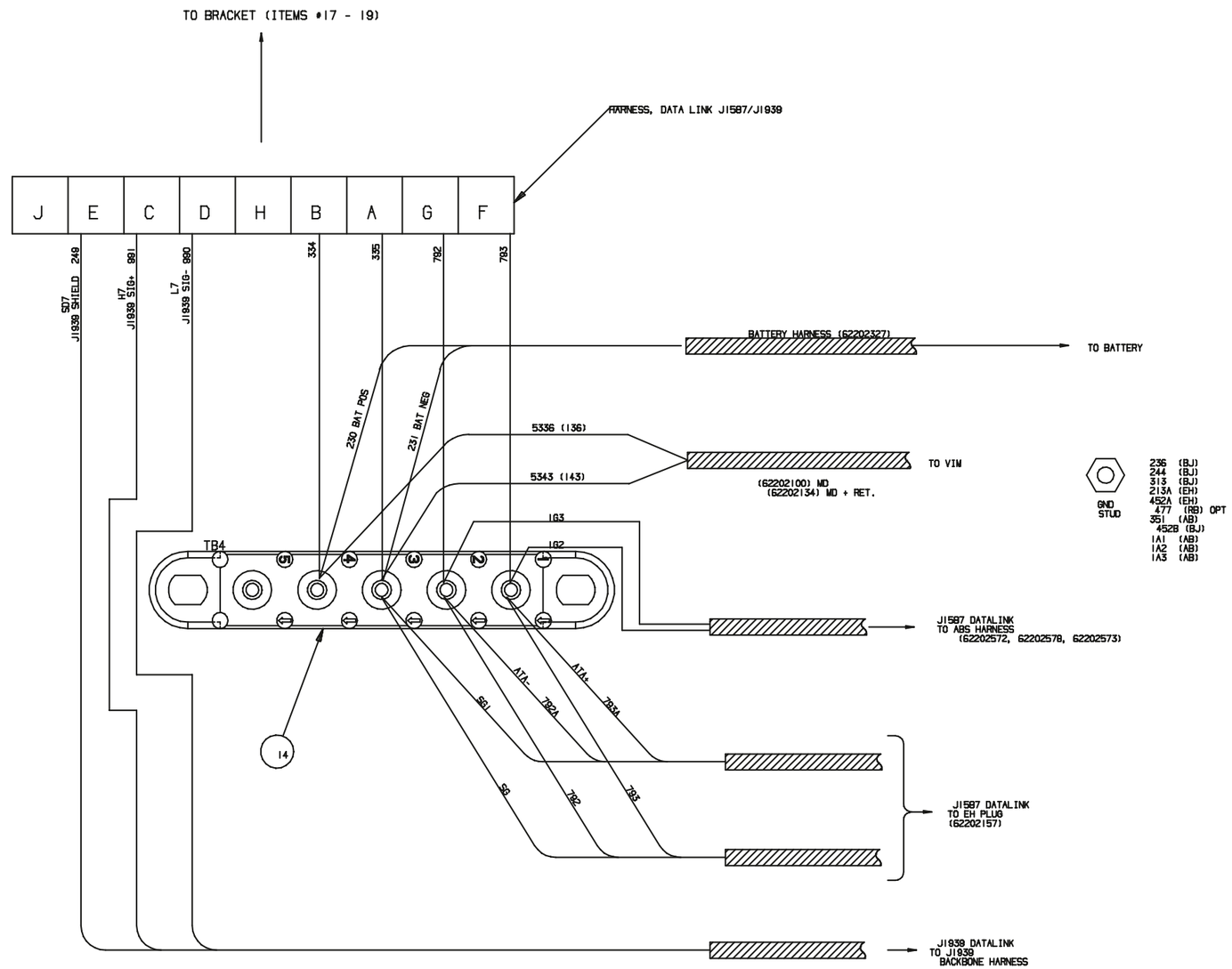

ON BOTTOM OF BOX

Thomas BUILT BUSES

62202957 A

ELECT. DIAGRAM MOD.
BOX COMPON. MTG. 98
CAT 3126 (CHASSIS)

Effective Date: 06/03/98

Sheet 3 of 3

FASTENER REQMTS (STANDARD) QTY PER ITEM	FASTENER PART NO.	QTY.	PART NO.	DESCRIPTION	ITEM
-	-	1	62201573	PANEL, INNER ELECTRICAL, MOD. REAR BOX, MVP-ER	1
1	61370334	4	61200709	RELAY - CONTROL, SPDT	2
2	61370334	3	61201491	BLOCK, JUNCTION - 8 POST FRONT ELECTRICAL CHASSIS	3
4	61370385	1	61201062	FUSE PANEL 6/8 POSITION	4
2	61370334	3	61200463	STUD, ELECTRICAL MTG.	5
2	61370337	1	61200728	SHUNT, 150 AMP. - 50 MILLIVOLT	6
-	-	1	61200343	FUSE - 5 AMP.	7
-	-	1	61200343	FUSE - 5 AMP. (OPT B2310-06-000 ONLY)	7
-	-	1	61200953	CIRCUIT BREAKER - 8 AMP.	8
-	-	4	61200936	CIRCUIT BREAKER - 10 AMP.	9
-	-	2	61200871	CIRCUIT BREAKER - 20 AMP.	10
-	-	1	61200872	CIRCUIT BREAKER - 30 AMP.	11
-	-	1	61200163	CABLE ENTRY SEAL, 1.5" I.D. (NOT SHOWN)	12
-	-	1	62210087	DIODE/WIRE ASM., ALTERNATOR (DELCO)	13
-	-	1	62201309	CABLE, AMMETER SHUNT (OPT.)	14
-	-	1	61200772	FUSE, 2 AMP (NOT SHOWN) #310	15
-	-	1	61200159	FUSEHOLDER (NOT SHOWN) #310	16

NOTE: QUANTITIES MAY REFLECT OPTIONAL EQUIPMENT.

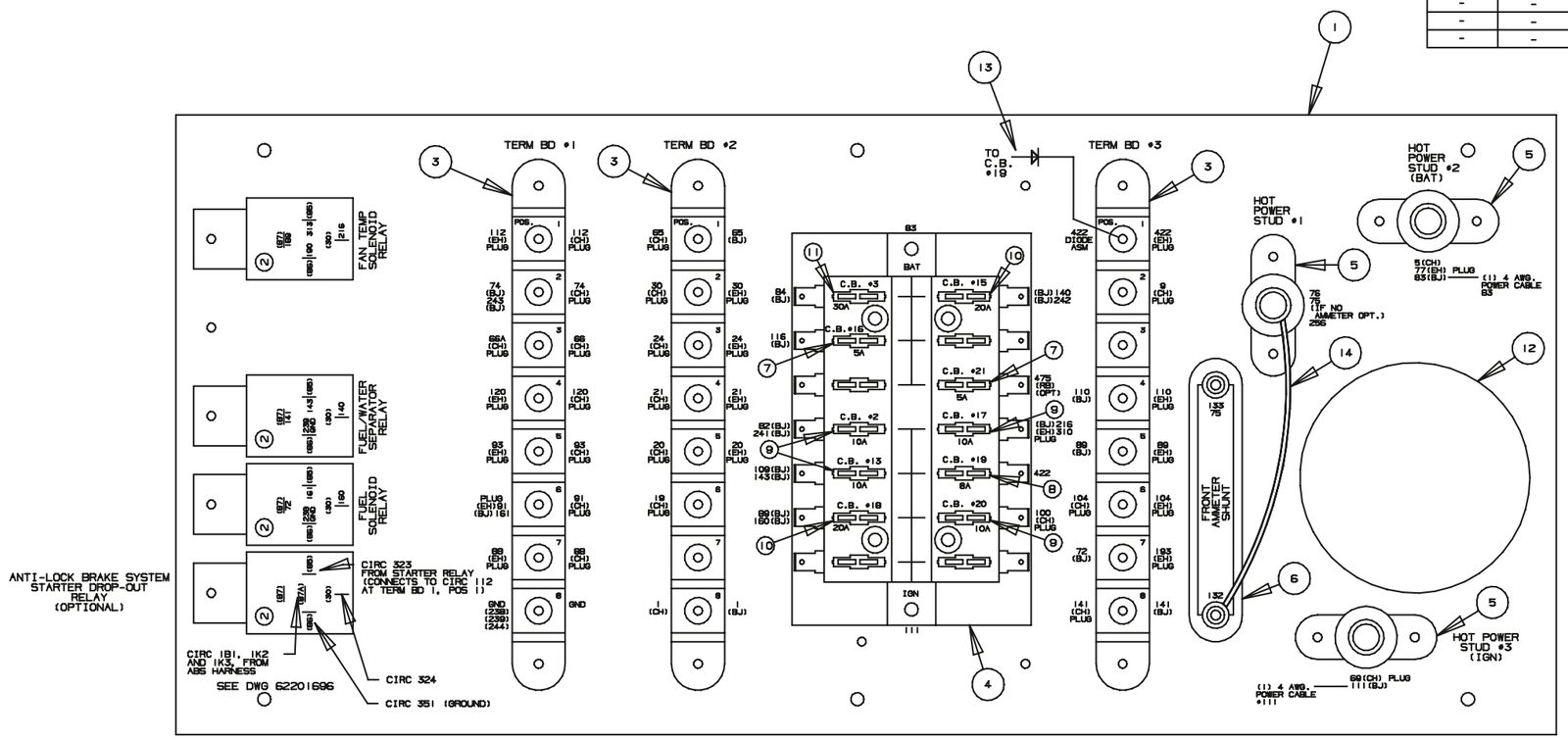

GND STUD IN MOD. REAR BOX

#106
#236
#244
#477 (RB) (OPT)

LEGEND

(CH) - CENTER HARNESS
(EH) - ENGINE HARNESS
(BJ) - MOD. BOX JUMPER
(BD) - BODY DROP-OUT OF REAR BOX
(RB) - ROLL BACK ALARM HARNESS (OPT)

Thomas BUILT BUSES

62201583 G

ELECT. DIAGRAM MOD. BOX COMPON. MTG. CUMMINS 6B (CHASSIS)

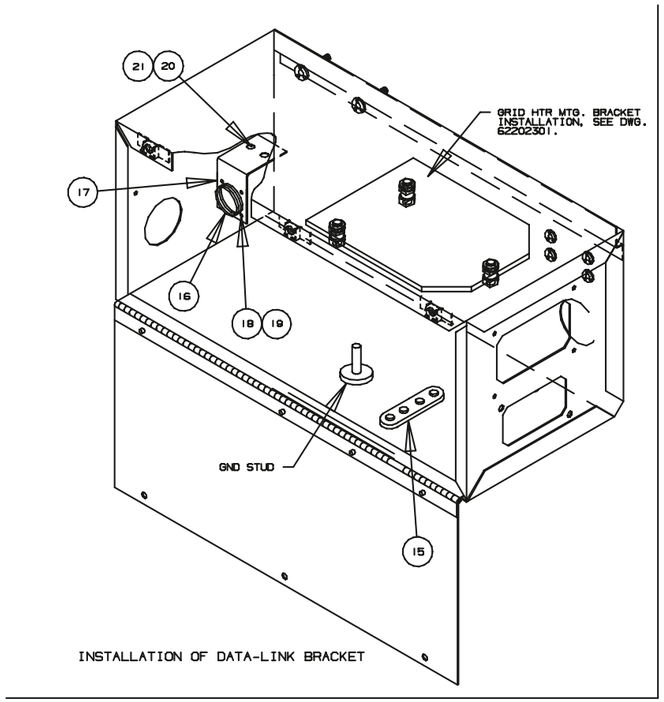

ITEM	PART NO.	DESCRIPTION	QTY.
1	62201573	PANEL, INNER ELECTRICAL, MOD. REAR BOX, MVP-ER	1
2	61200709	RELAY - CONTROL, SPDT	2
3	61200130	BLOCK - JUNCTION U.S.D. #C4559-8	3
4	61201062	FUSE PANEL 6/8 POSITION	1
5	61200463	STUD, ELECTRICAL MTG.	3
6	61200728	SHUNT, 150 AMP. - 50 MILLIVOLT	1
7	61200343	FUSE - 5 AMP	3
8	61200953	CIRCUIT BREAKER - 8 AMP.	1
9	61200936	CIRCUIT BREAKER - 10 AMP.	4
10	61200871	CIRCUIT BREAKER - 20 AMP.	1
11	61200872	CIRCUIT BREAKER - 30 AMP.	1
12	61200163	CABLE ENTRY SEAL, 1.5" I.D. (NOT SHOWN)	1
13	62210087	DIODE/WIRE ASM., ALTERNATOR (DELCO) (OPT.)	1
14	62201309	CABLE, AMMETER SHUNT (OPT.)	1
15	61200939	TERMINAL BD. - 4 POS. (BAT PWR)	1
16	62202207	HARNESS, DATA LINK J1587/J1939	1
17	62202087	BRACKET, MTG - DATA LINK PLUG	1
18	61370026	SCREW, MACHINE - #4 - 40 x 3/8	4
19	61370027	LOCKNUT - #4 - 40	4
20	61370036	SCREW - MACHINE, 8-32 x 5/8	2
21	61370038	NUT - LOCK, 8-32	2
22	61200116	SWITCH - TOGGLE, SPDT	2
23	61200100	SWITCH - PUSH BUTTON	1
24	61200218	GAUGE, OIL PRESSURE (OPT.)	1
25	61201095	CIRCUIT BREAKER, 150 AMP	1

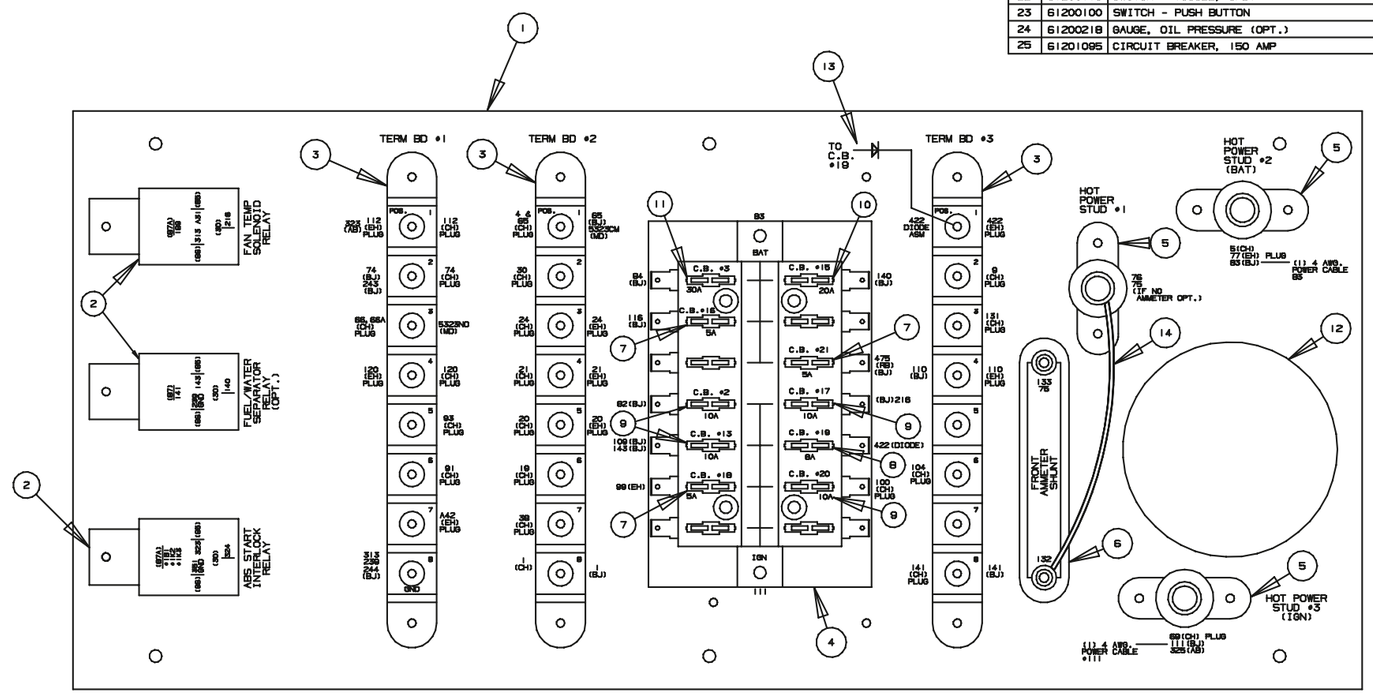

SHEET 1 OF 2

LEGEND
(CH) - CENTER HARNESS
(EH) - ENGINE HARNESS
(BJ) - MOD. BOX JUMPER
(BD) - BODY DROP-OUT OF REAR BOX
(RB) - ROLL-BACK HARNESS (OPT)
(AB) - ABS
(MD) WTEC III

Sheet 1 of 2

Thomas BUILT BUSES

62202304 D

ELECT. DIAGRAM MOD. BOX COMPON. MTG. 98 CUMMINS 6B (CHASSIS)

End Date: 02/23/98

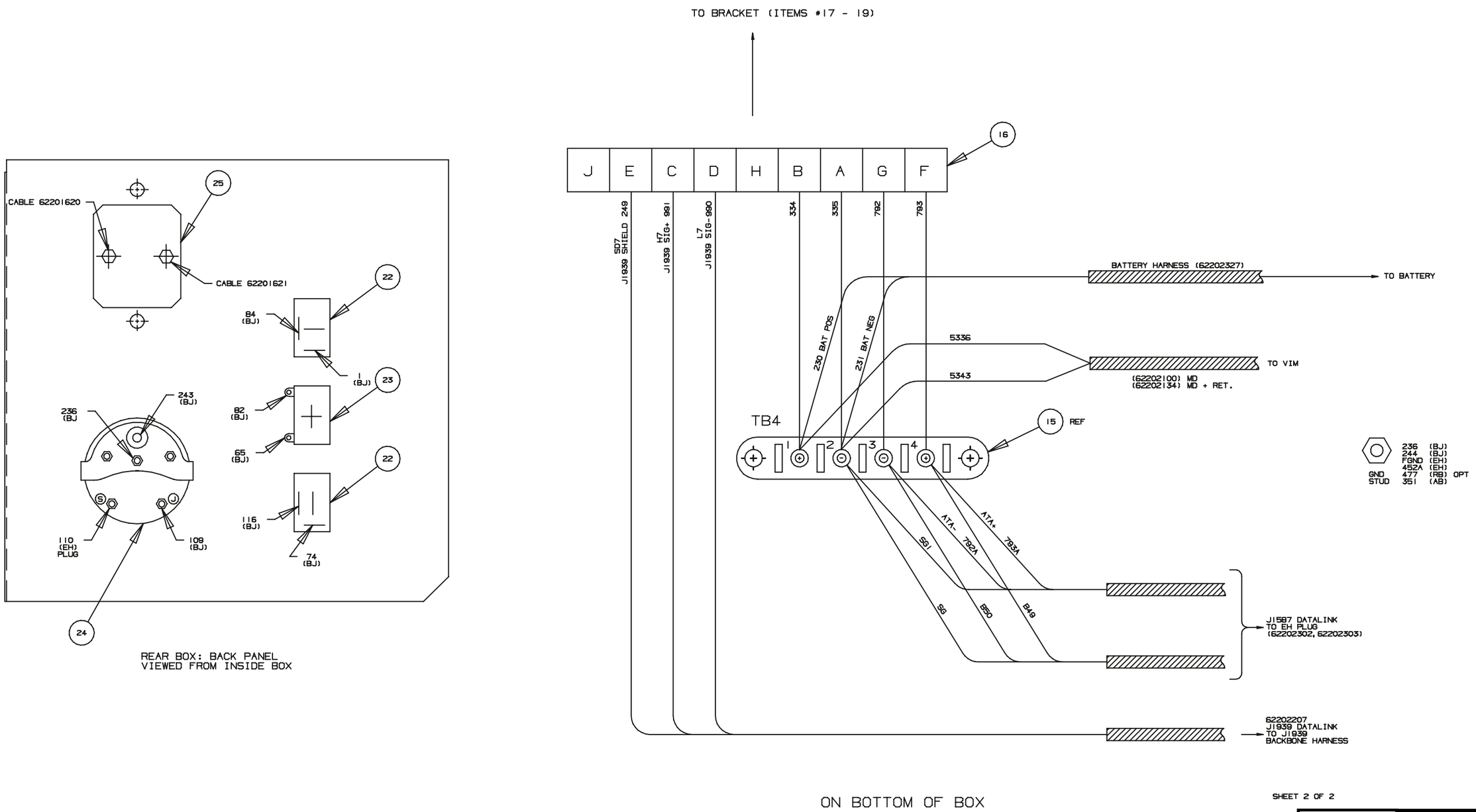

SHEET 2 OF 2

Thomas BUILT BUSES

62202304 D

Sheet 2 of 2

ELECT. DIAGRAM MOD. BOX COMPON. MTG. 98 CUMMINS 6B (CHASSIS)

End Date: 02/23/98

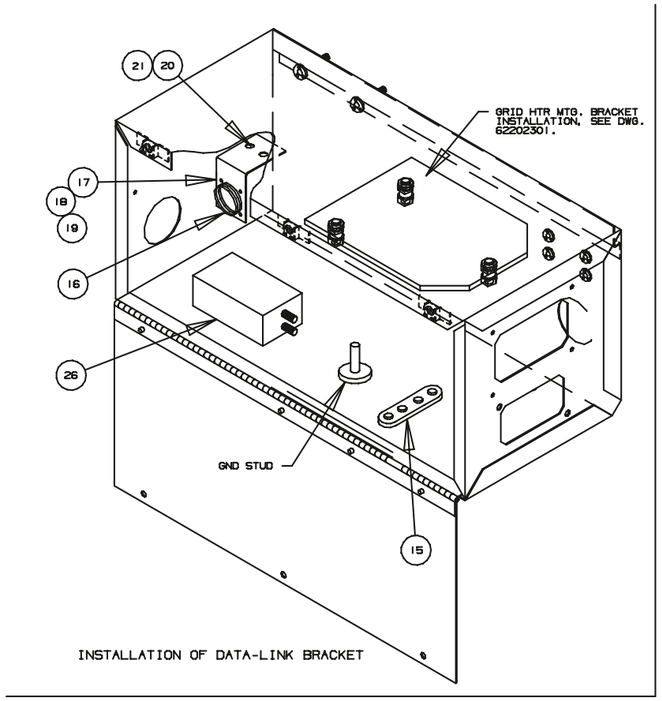

INSTALLATION OF DATA-LINK BRACKET

ITEM	PART NO.	DESCRIPTION	QTY.
1	62201573	PANEL, INNER ELECTRICAL, MOD. REAR BOX, MVP-ER	1
2	61200709	RELAY - CONTROL, SPDT	2
3	61200130	BLOCK - JUNCTION U.S.D. #C4559-8	3
4	61201062	FUSE PANEL 6/8 POSITION	1
5	61200453	STUD, ELECTRICAL MTG.	3
6	61200728	SHUNT, 150 AMP. - 50 MILLIVOLT	1
7	61200343	FUSE - 5 AMP	3
8	61200853	CIRCUIT BREAKER - 8 AMP.	1
9	61200836	CIRCUIT BREAKER - 10 AMP.	4
10	61200871	CIRCUIT BREAKER - 20 AMP.	1
11	61200872	CIRCUIT BREAKER - 30 AMP.	1
12	61201163	CABLE ENTRY SEAL, 1.5" I.D. (NOT SHOWN)	1
13	62210087	DIODE/WIRE ASM., ALTERNATOR (DELCO) (OPT.)	1
14	62201309	CABLE, AMMETER SHUNT (OPT.)	1
15	61200938	TERMINAL BD. - 4 POS. (BAT PWR)	1
16	62202207	HARNESS, DATA LINK J1587/J1939	1
17	62202087	BRACKET, MTG - DATA LINK PLUG	1
18	61370026	SCREW, MACHINE - #4 - 40 x 3/8	4
19	61370027	LOCKNUT - #4 - 40	4
20	61370036	SCREW - MACHINE, 8-32 x 5/8	2
21	61370038	NUT - LOCK, 8-32	2
22	61201116	SWITCH - TOGGLE, SPDT	2
23	61201100	SWITCH - PUSH BUTTON	1
24	61200218	GAUGE, OIL PRESSURE (OPT.)	1
25	61201095	CIRCUIT BREAKER, 150 AMP	1
26	61200875	RELAY, IGNITION POWER	1

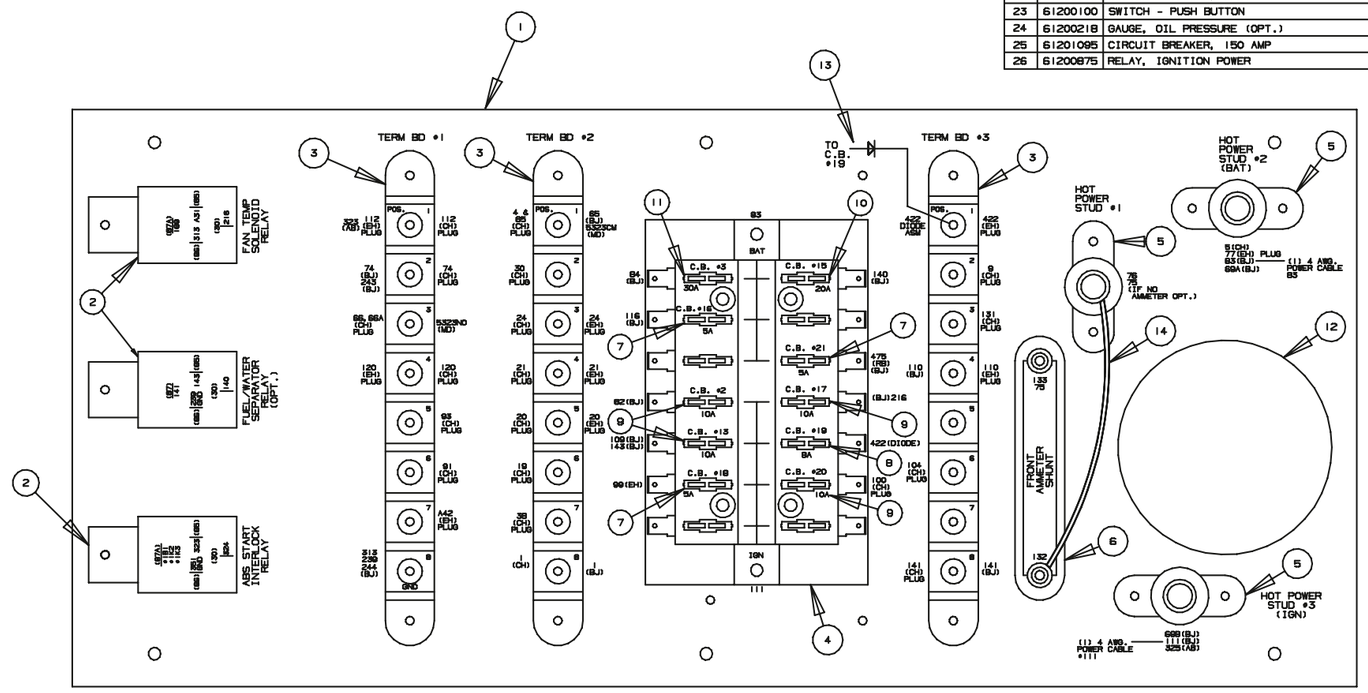

SHEET 1 OF 2

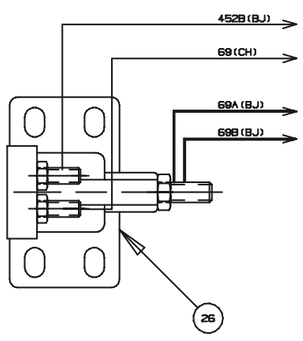

LEGEND

(CH) - CENTER HARNESS
(EH) - ENGINE HARNESS
(BJ) - MOD. BOX JUMPER
(BD) - BODY DROP-OUT OF REAR BOX
(RB) - ROLL-BACK HARNESS (OPT)
(AB) - ABS
(MD) WTEC III

Sheet 1 of 2

Thomas BUILT BUSES

62202523 B

ELECT. DIAGRAM MOD. BOX COMPON. MTG. 98 CUMMINS ISB (CHASSIS)

Effective Date: 02/24/98

End Date: 08/02/98

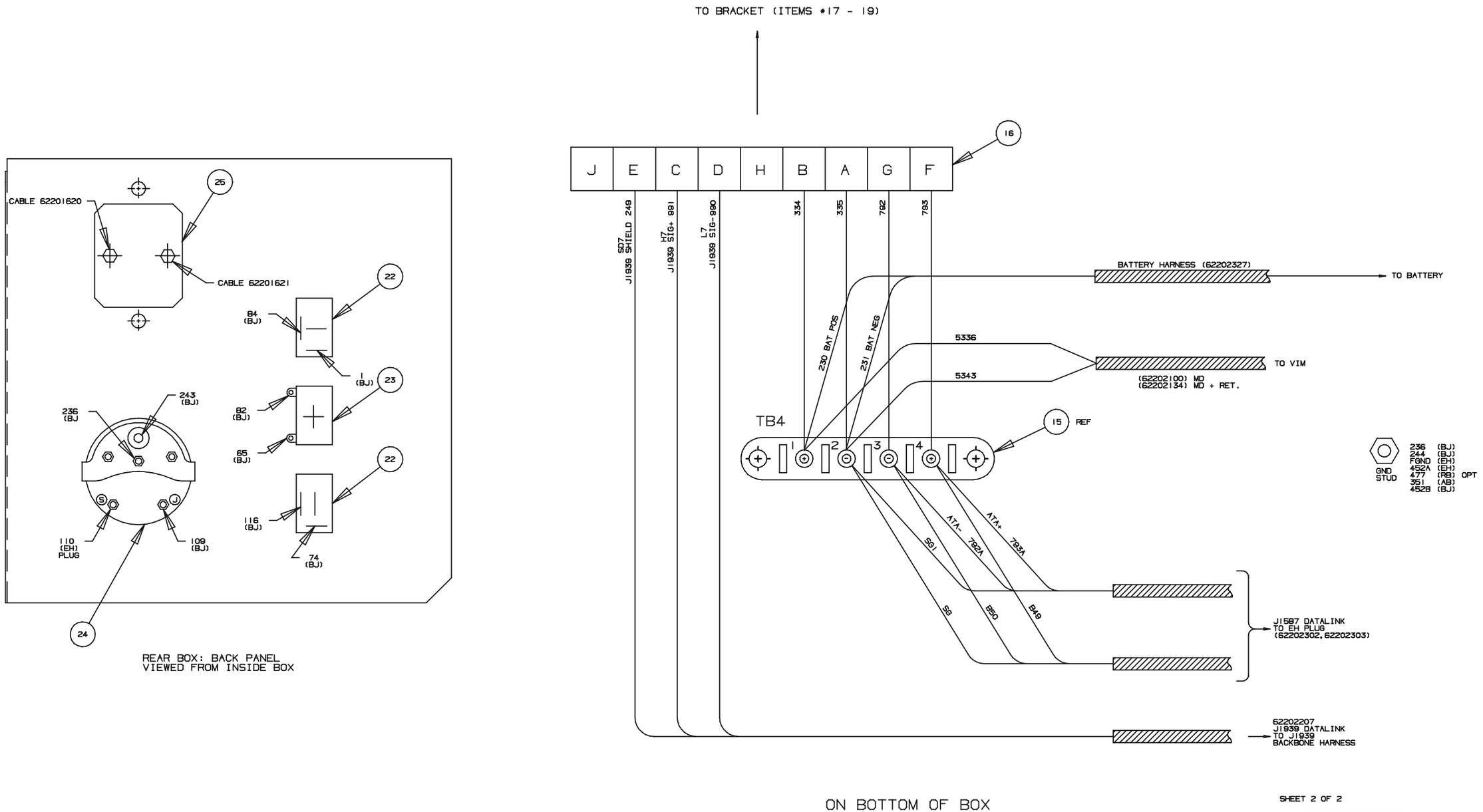

SHEET 2 OF 2

Thomas BUILT BUSES

62202778 C

Sheet 2 of 2

ELECT. DIAGRAM MOD. BOX COMPON. MTG. 98 CUMMINS ISB (CHASSIS)

Effective Date: 02/24/98

End Date: 08/02/98

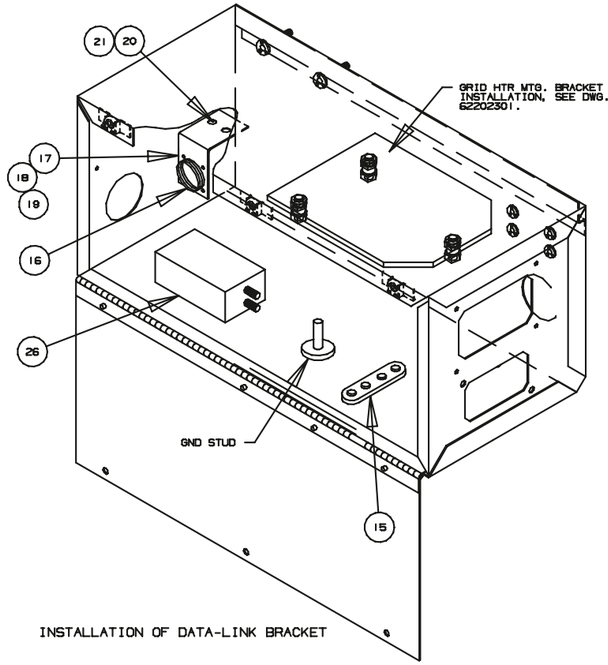

INSTALLATION OF DATA-LINK BRACKET

ITEM	PART NO.	DESCRIPTION	QTY.
1	62201573	PANEL, INNER ELECTRICAL, MOD. REAR BOX, MVP-ER	1
2	61200709	RELAY - CONTROL, SPDT	2
3	61200130	BLOCK - JUNCTION U.S.D. #C4559-8	3
4	61201062	FUSE PANEL 6/8 POSITION	1
5	61200463	STUD, ELECTRICAL MTG.	3
6	61200728	SHUNT, 150 AMP. - 50 MILLIVOLT	1
7	61200343	FUSE - 5 AMP	3
8	61200953	CIRCUIT BREAKER - 8 AMP.	1
9	61200936	CIRCUIT BREAKER - 10 AMP.	4
10	61200871	CIRCUIT BREAKER - 20 AMP.	1
11	61200872	CIRCUIT BREAKER - 30 AMP.	2
12	61200163	CABLE ENTRY SEAL, 1.5" I.D. (NOT SHOWN)	1
13	62210087	DIODE/WIRE ASM., ALTERNATOR (DELCO) (OPT.)	1
14	62201309	CABLE, AMMETER SHUNT (OPT.)	1
15	61200938	TERMINAL BD. - 4 POS. (BAT PWR)	1
16	62202207	HARNESS, DATA LINK J1587/J1939	1
17	62202087	BRACKET, MTG - DATA LINK PLUG	1
18	61370026	SCREW, MACHINE - #4 - 40 x 3/8	4
19	61370027	LOCKNUT - #4 - 40	4
20	61370036	SCREW - MACHINE, 8-32 x 5/8	2
21	61370038	NUT - LOCK, 8-32	2
22	61200116	SWITCH - TOGGLE, SPDT	2
23	61200100	SWITCH - PUSH BUTTON	1
24	61200218	GAUGE, OIL PRESSURE (OPT.)	1
25	61201095	CIRCUIT BREAKER, 150 AMP	1
26	61200875	RELAY, IGNITION POWER	1

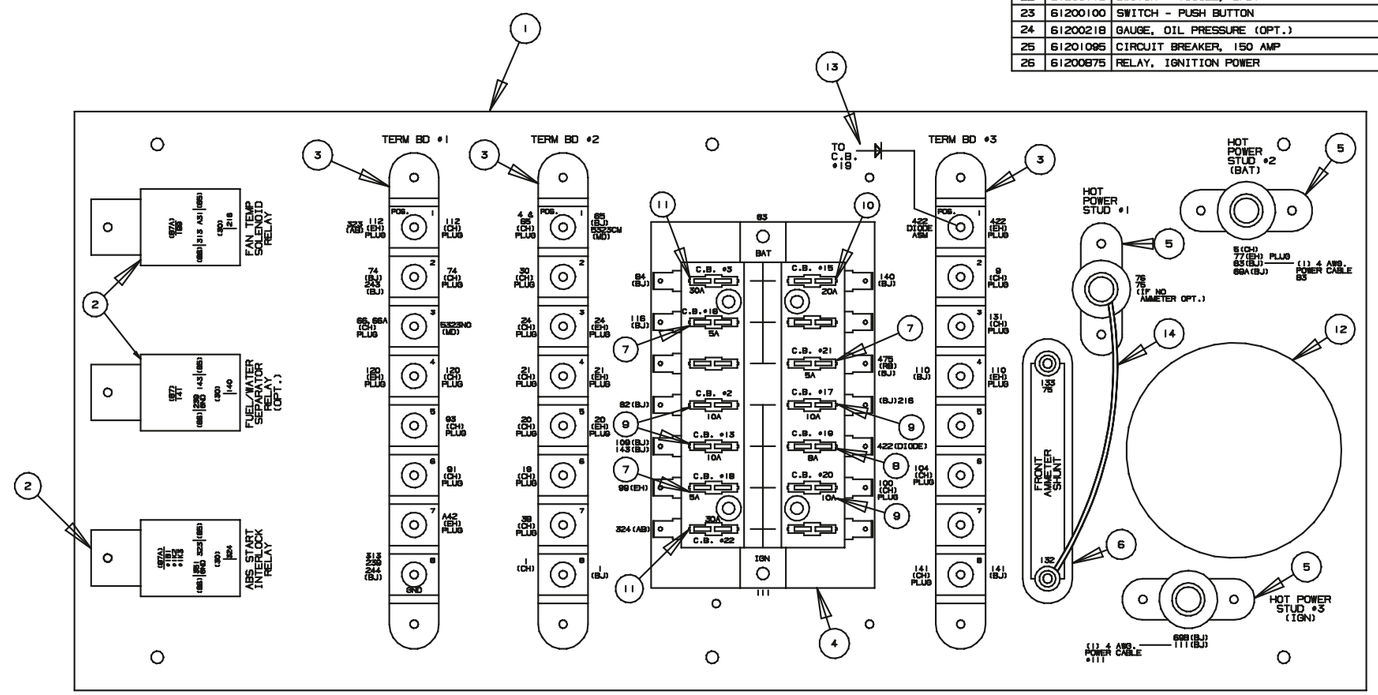

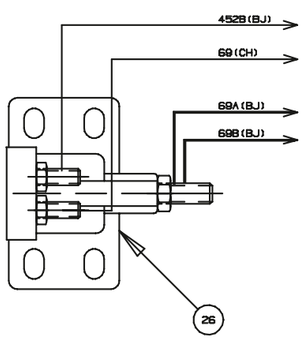

LEGEND
(CH) - CENTER HARNESS
(EH) - ENGINE HARNESS
(BJ) - MOD. BOX JUMPER
(BD) - BODY DROP-OUT OF REAR BOX
(RB) - ROLL-BACK HARNESS (OPT)
(AB) - ABS
(MD) WTEC III

Sheet 1 of 2

Thomas BUILT BUSES

62202585 B

ELECT. DIAGRAM MOD. BOX COMPON. MTG. 98 CUMMINS ISB (CHASSIS)

Effective Date: 08/03/98

End Date: 08/11/98

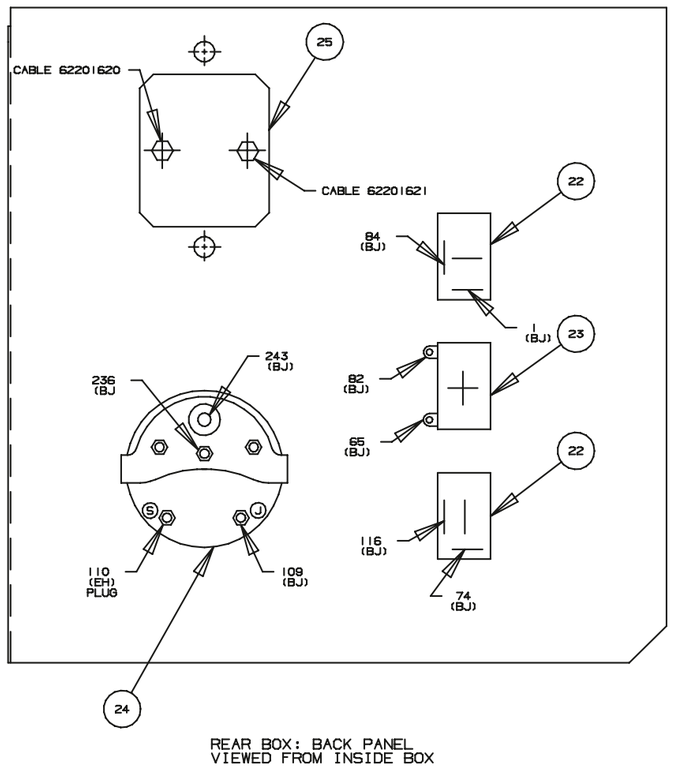

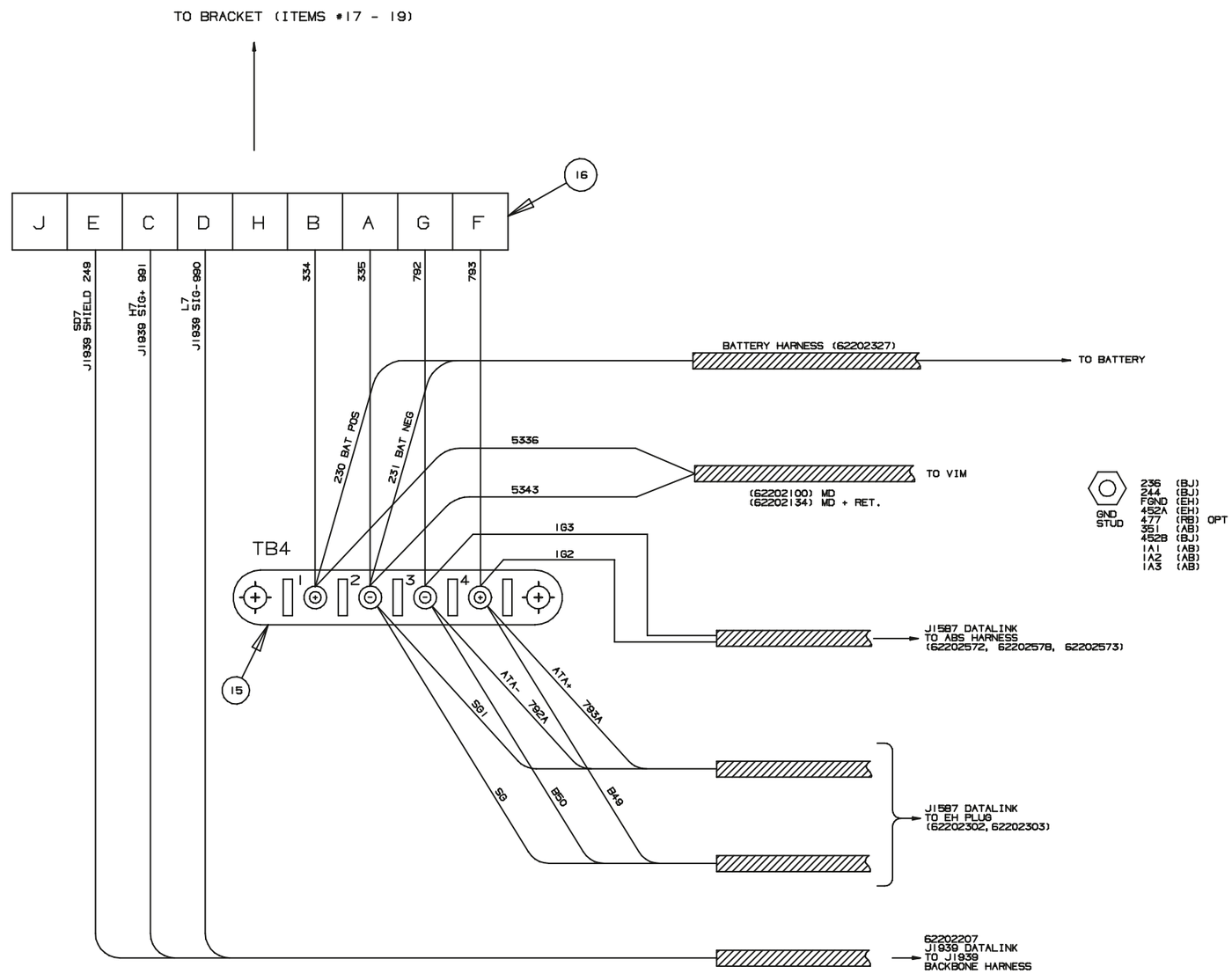

ON BOTTOM OF BOX

SHEET 2 OF 2

Thomas BUILT BUSES

62202585 B

Sheet 2 of 2

ELECT. DIAGRAM MOD.
BOX COMPON. MTG. 98
CUMMINS ISB (CHASSIS)
Effective Date: 08/03/98
End Date: 08/11/98

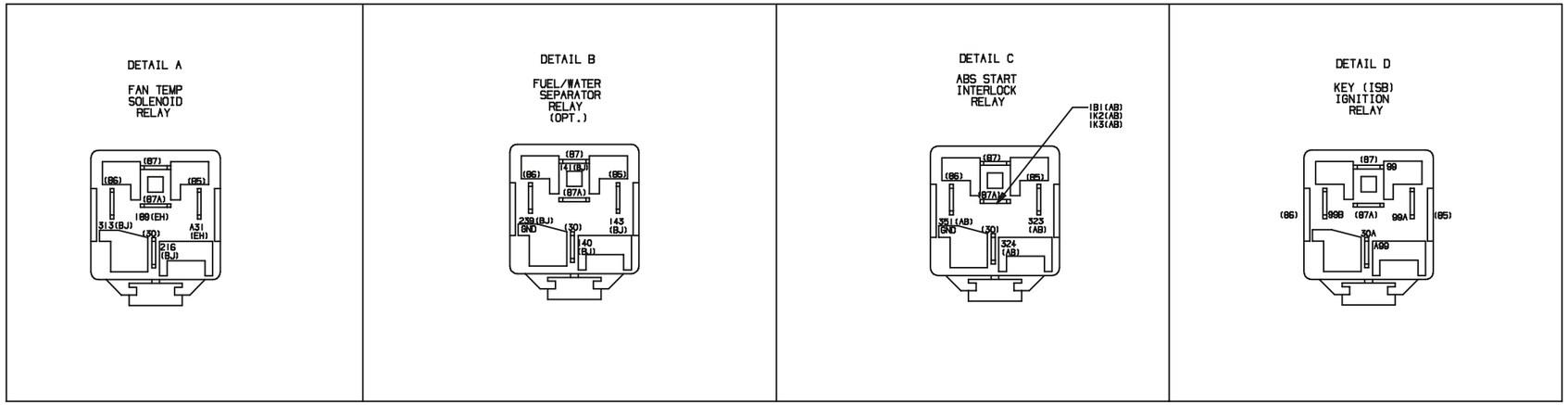

ITEM	QUANTITY	PART NUMBER	DESCRIPTION
1	1	61200100	START SWITCH
2	2	61200116	SWITCH, TOGGLE, SPST
3	3	61200130	BLOCK, JUNCTION - 8 POST FRONT ELECTRICAL CHASSIS
4	1	61200163	SEAL, CABLE ENTRY, 1 1/2 IN.
5	1	61200218	GAUGE - 2 INCH OIL PRESSURE
6	3	61200343	FUSE - 5 AMP AUTOFUSE TYPE,
7	1	61200411	CONTACTOR, POWER, 12 VDC
8	3	61200463	STUD, ELECT. - MOUNTING TERMINAL BD., 3/8-16
9	3	61200709	RELAY - CONTROL WITH MTG. BRACKET,
10	1	61200728	SHUNT, AMMETER
11	1	61201062	FUSE PANEL - 14 POSITION ATC FUSING, DOUBLE BUSS INPUT
12	1	61201095	CIRCUIT BREAKER - 150 AMP 30V DC, MANUAL RESET W/SW.
13	1	61201114	RELAY - CONTROL W/ MTG. BRACKET, COIL SUPPRESS
14	1	61201434	JUNCTION BLOCK, 5 POST, 10-32 STUD TYPE,
15	1	61201442	CIRCUIT BREAKER, 8 AMP 14 VDC, AUTO RESET
16	4	61201443	CIRCUIT BREAKER, 10 AMP 14 VDC, AUTO RESET
17	1	61201445	CIRCUIT BREAKER, 20 AMP 14 VDC, AUTO RESET
18	2	61201447	CIRCUIT BREAKER, 30 AMP 14 VDC, AUTO RESET
19	4	61370026	SCREW - MACHINE, #4-40 X 3/8 ROUND HEAD, ZINC
20	4	61370027	LOCK NUT - NYLON INSERT #4-40, ZINC
21	2	61370036	SCREW-MACHINE, TRUSS HEAD, PHILLIPS (BLACK OXIDE)
22	2	61370039	NUT-LOCK W/ ELASTIC 8-32
23	1	62201573	PANEL, INNER ELECTRICAL MODULAR REAR ELECT. BOX
24	1	62202087	BRACKET-MTG.,OFF BOARD DIAGNOSTIC CONNECTOR PLUG
25	1	62202232	ELECTRICAL BOX, MODULAR REAR WELDED ASSEMBLY, WVP-ER
26	1	62202668	CHART, RELAY LABELS ABS START-INTERLOCK
27	1	62202678	CHART, RELAY LABELS FAN TEMPERATURE SOLENOID
28	1	62202680	CHART, RELAY LABELS FUEL/WATER SEPARATOR
29	1	62202687	CHART, RELAY LABELS KEY IGNITION

NOTE: ADDITIONAL PARTS SHOWN ON SHEETS 2 AND 3

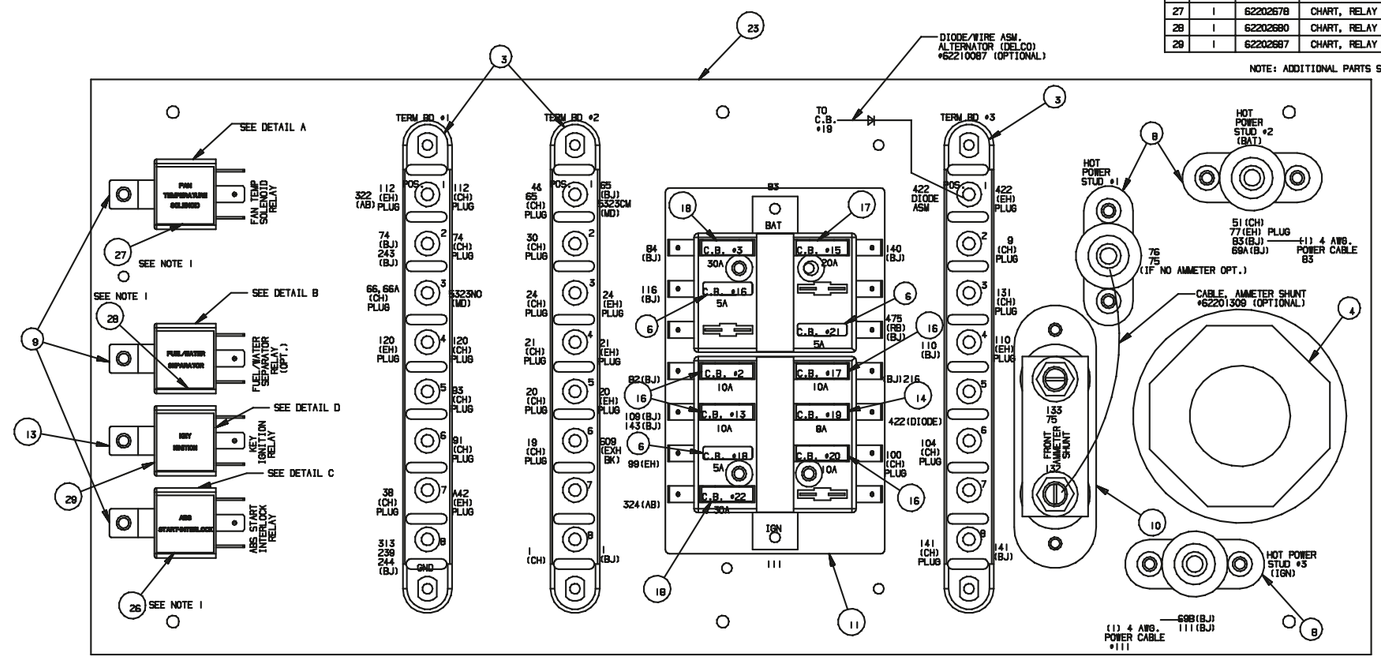

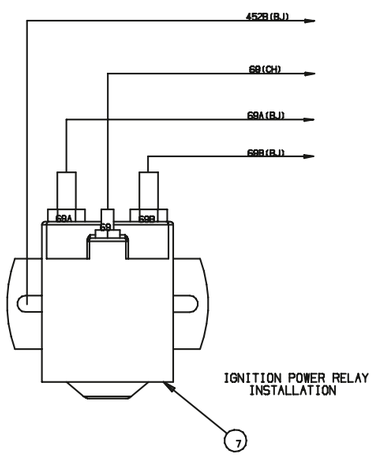

NOTES:
1) TYPICAL RELAY LABEL PLACEMENT: CENTERED ON FRONT FACE OF RELAY, TO READ PARALLEL TO GROUND WHEN MOUNTED.

LEGEND

(CH) - CENTER HARNESS
(EH) - ENGINE HARNESS
(BJ) - MOD. BOX JUMPER
(BD) - BODY DROP-OUT OF REAR BOX
(RB) - ROLL-BACK HARNESS (OPT)
(AB) - ABS
(MD) - MTEC III

Sheet 1 of 3

Thomas BUILT BUSES

62202620 F

ELECT. DIAGRAM MOD. BOX COMPON. MTG. 98 CUMMINS ISB (CHASSIS)

Effective Date: 08/12/98

End Date: 06/14/99

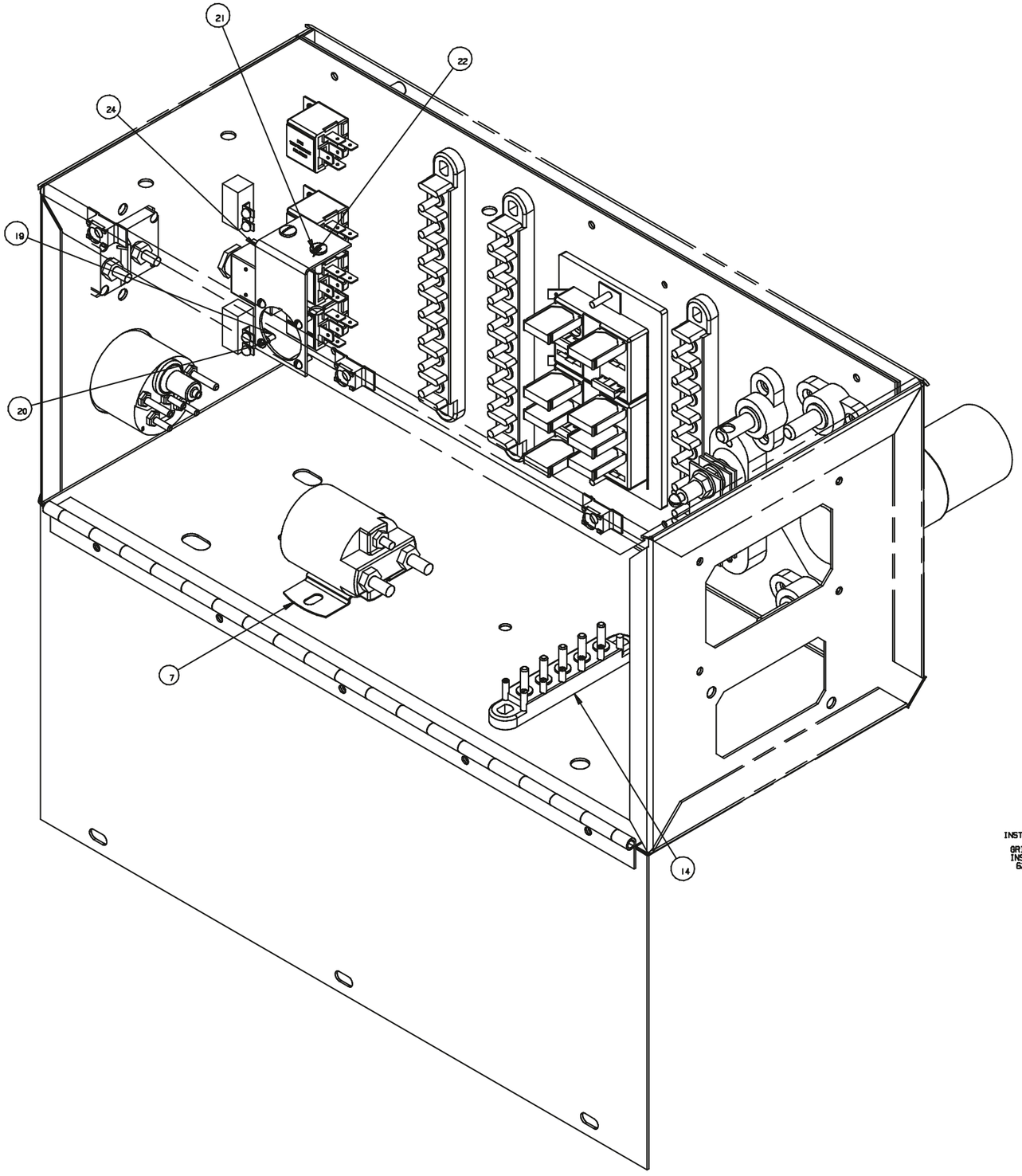

INSTALLATION OF DATA-LINK BRACKET

GRID HTR MTG. BRACKET INSTALLATION, SEE DWG. 62202301.

Sheet 2 of 3

Thomas BUILT BUSES

62202620 F

ELECT. DIAGRAM MOD. BOX COMPON. MTG. 98 CUMMINS ISB (CHASSIS)

Effective Date: 08/12/98

End Date: 06/14/99

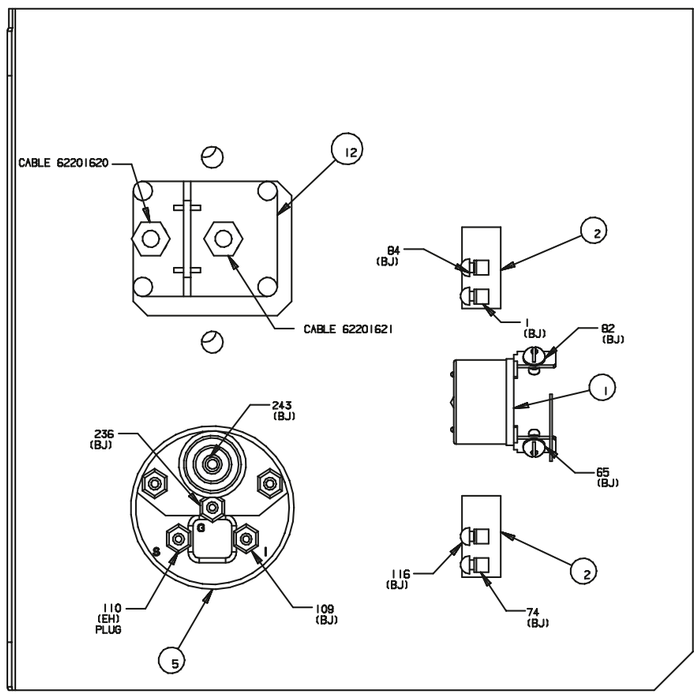

REAR BOX: BACK PANEL
VIEWED FROM INSIDE BOX

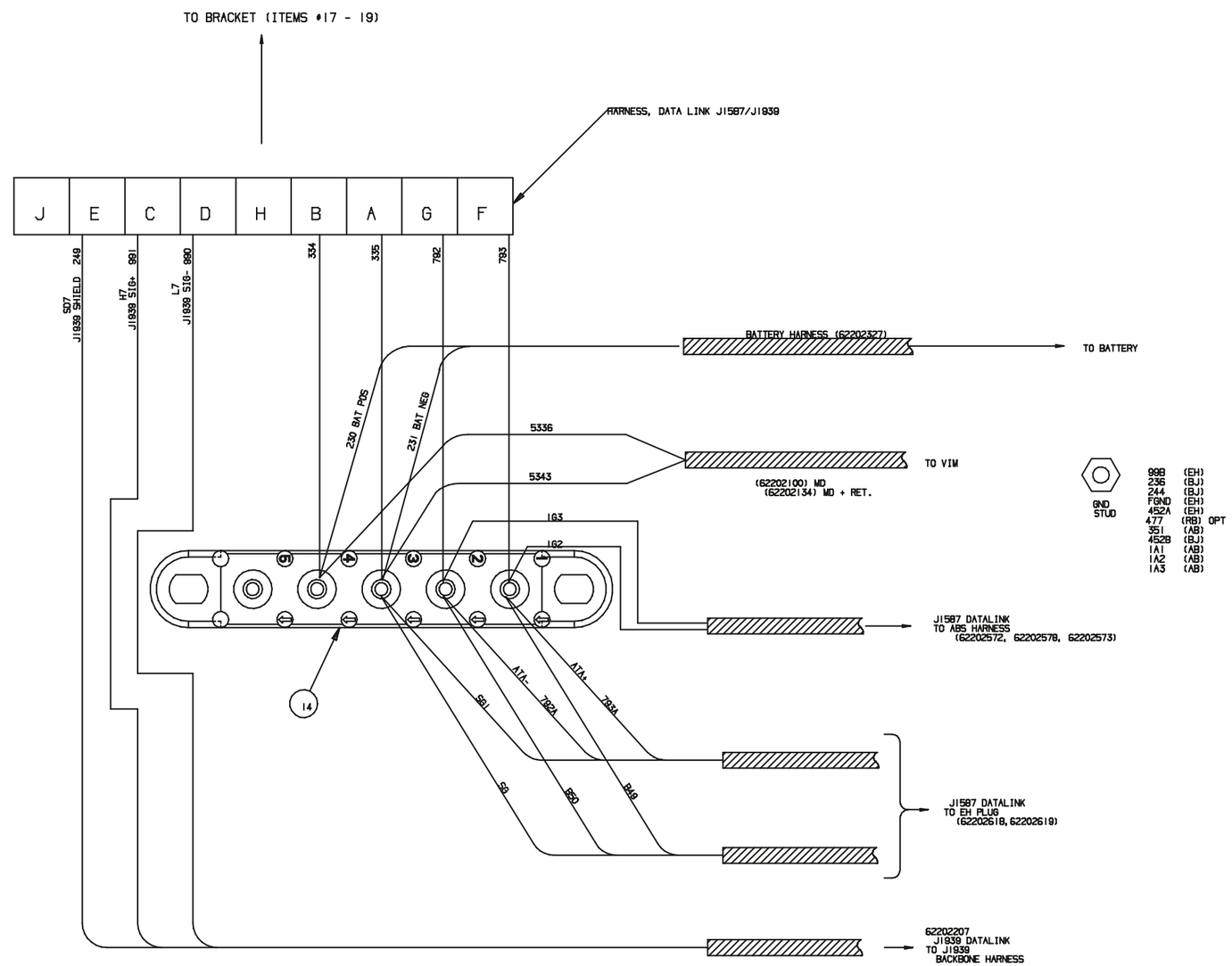

ON BOTTOM OF BOX

Thomas BUILT BUSES

62202620 F

ELECT. DIAGRAM MOD. BOX COMPON. MTG. 98 CUMMINS ISB (CHASSIS)

Effective Date: 08/12/98

End Date: 06/14/99

Sheet 3 of 3

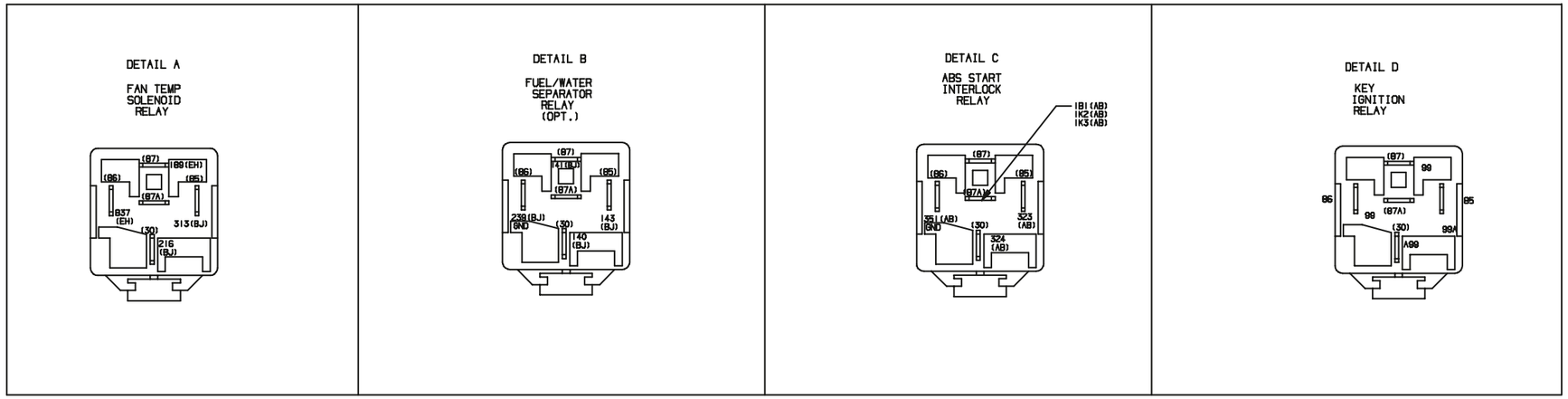

ITEM	QUANTITY	PART NUMBER	DESCRIPTION
1	1	61200100	START SWITCH
2	2	61200116	SWITCH, TOGGLE, SPST
3	3	61200130	BLOCK, JUNCTION - 8 POST
4	1	61200163	SEAL, CABLE ENTRY, 1 1/2 IN.
5	1	61200218	GAUGE - 2 INCH
6	3	61200343	FUSE - 5 AMP
7	1	61200411	CONTACTOR, POWER, 12 VDC
8	2	61200463	STUD, ELECT. - MOUNTING
9	5	61200709	RELAY - CONTROL
10	1	61201062	FUSE PANEL - 14 POSITION
11	2	61201095	CIRCUIT BREAKER - 150 AMP
12	1	61201284	TERMINAL BOARD, FEED-
13	1	61201433	SHUNT, AMMETER, 300 AMP
14	1	61201434	JUNCTION BLOCK, 5 POST,
15	1	61201442	CIRCUIT BREAKER, 8 AMP
16	5	61201443	CIRCUIT BREAKER, 10 AMP
17	2	61201445	CIRCUIT BREAKER, 20 AMP
18	2	61201447	CIRCUIT BREAKER, 30 AMP
19	4	61370026	SCREW - MACHINE, #4-40 X 3/8
20	4	61370027	LOCK NUT - NYLON INSERT
21	2	61370036	SCREW-MACHINE, TRUSS HEAD,
22	2	61370038	NUT-LOCK W/ ELASTIC
23	4	61370040	NUT, HEX HEAD, GRADE 8
24	1	61370042	NUT, LOCKING, HEX HEAD
25	1	61370043	NUT, LOCKING, HEX HEAD
26	3	61370050	NUT, HEX HEAD, GRADE 8
27	2	61370063	NUT, HEX HEAD, GRADE 8
28	3	61370260	LOCKWASHER, 1/4
29	2	61370266	LOCKWASHER, 3/8
30	15	61370334	SCREW-10 X 5/8
31	2	61370337	SCREW - SELF TAPPING, #10 X 1-1/4
32	2	61370802	BOLT, HEX HEAD, 1/4-20 X 3/4
33	1	61370803	BOLT, HEX HEAD, 1/4-20 X 1
34	4	61370850	3/16 - 1 IN. PHILLIPS ROUND HEAD
35	1	62202087	BRACKET-MTG., OFF BOARD
36	1	62202668	CHART, RELAY LABELS
37	1	62202678	CHART, RELAY LABELS
38	1	62202680	CHART, RELAY LABELS
39	1	62202687	CHART, RELAY LABELS
40	1	62202962	ELECTRICAL BOX, MODULAR REAR

NOTE: ADDITIONAL PARTS SHOWN ON SHEETS 2 AND 3

ITEMS NOT SHOWN			
ITEM	QUANTITY	PART NUMBER	DESCRIPTION
41	1	62202615	DIODE WIRE ASM. MOD BOX

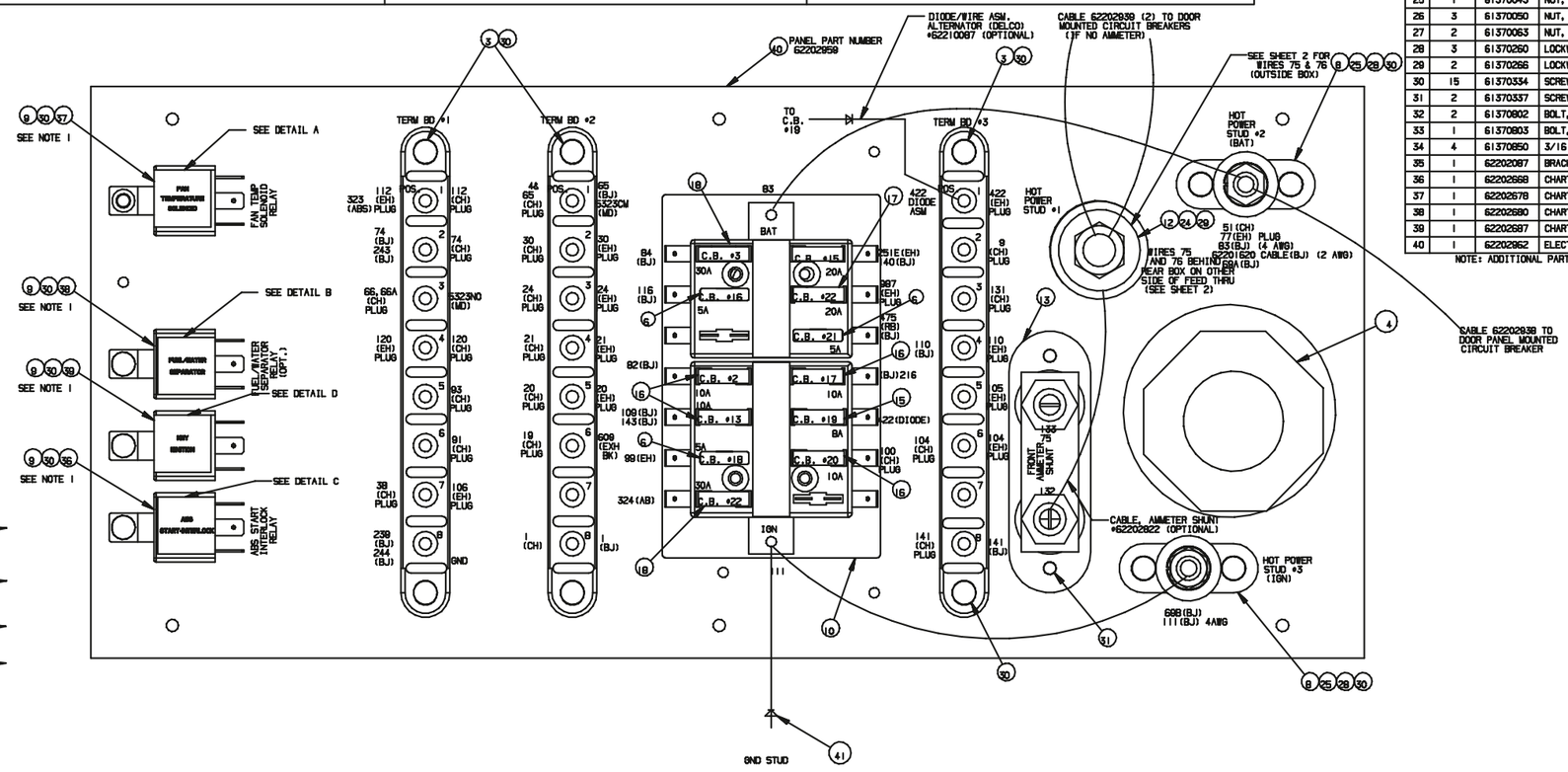

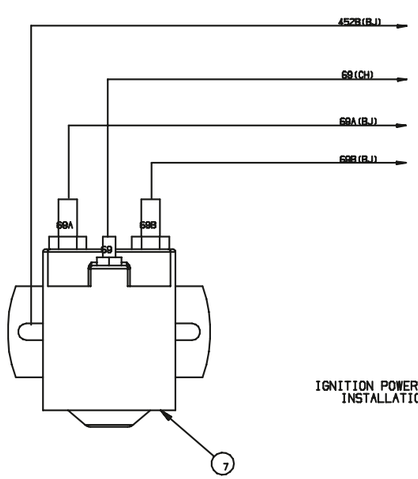

IGNITION POWER RELAY INSTALLATION

NOTES:
1) TYPICAL RELAY LABEL PLACEMENT: CENTERED ON FRONT FACE OF RELAY, TO READ PARALLEL TO GROUND WHEN MOUNTED.

LEGEND

(CH) - CENTER HARNESS
(EH) - ENGINE HARNESS
(BJ) - MOD. BOX JUMPER
(BD) - BODY DROP-OUT OF REAR BOX
(RB) - ROLL-BACK HARNESS (OPT)
(AB) - ABS
(MD) - WTEC III

Sheet 1 of 3

Thomas BUILT BUSES

62202624 A

ELECT. DIAGRAM MOD. BOX COMPON. MTG. 98 CUMMINS ISB (CHASSIS)

Effective Date: 06/15/99

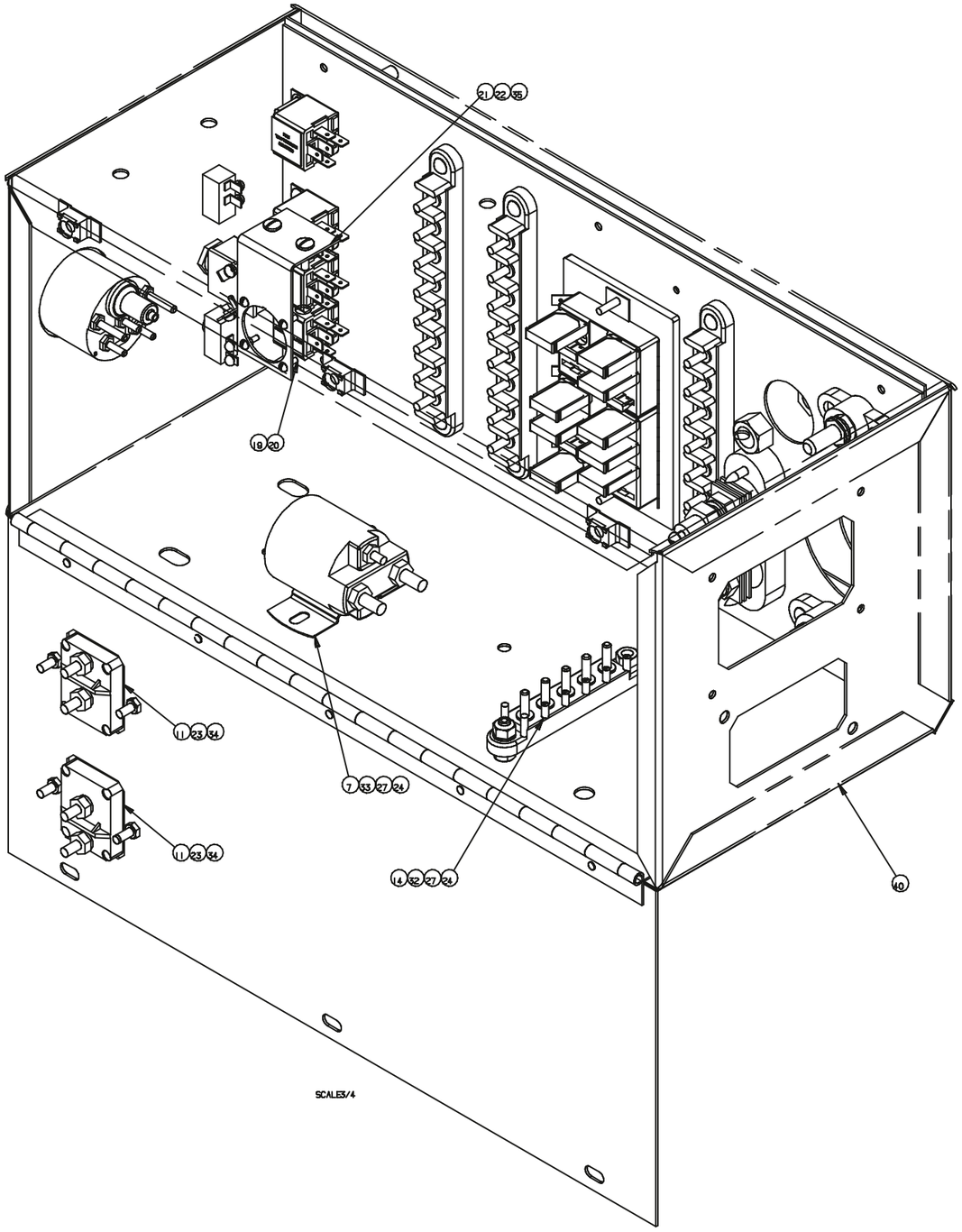

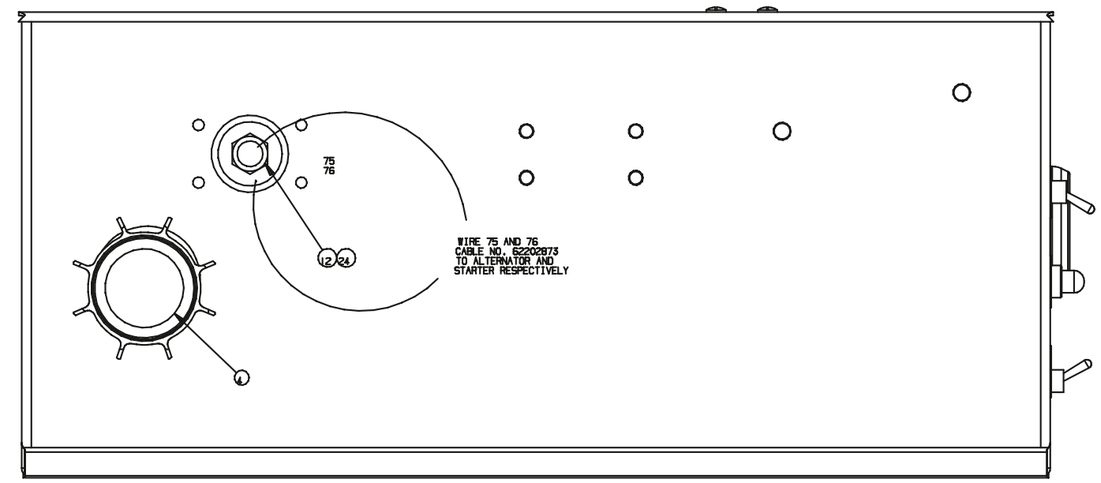

VIEW FROM BACK
SCALE3/4

INSTALLATION OF DATA-LINK BRACKET

GRID HTR MTG. BRACKET
INSTALLATION, SEE DWG.
62202301.

Thomas BUILT BUSES

62202924 A

Sheet 2 of 3

ELECT. DIAGRAM MOD. BOX COMPON. MTG. 98 CUMMINS ISB (CHASSIS)

Effective Date: 06/15/99

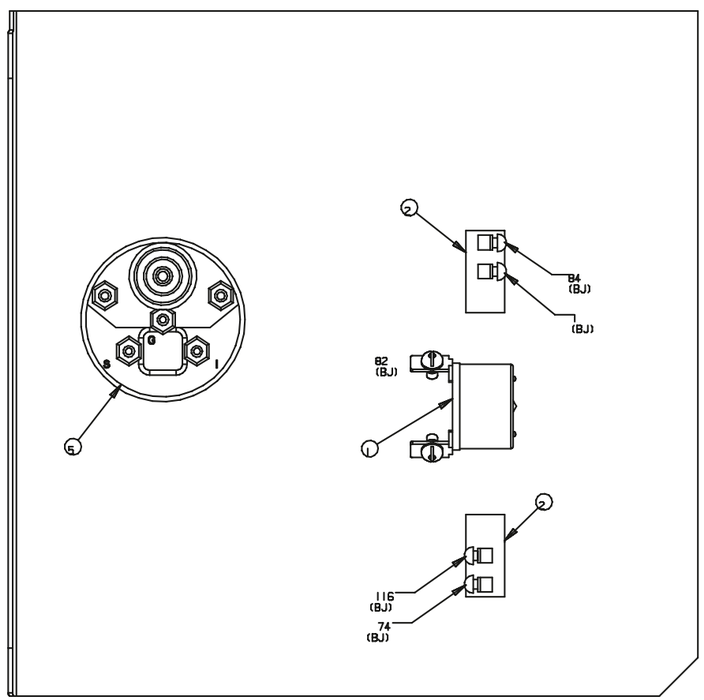

REAR BOX: BACK PANEL
VIEWED FROM INSIDE BOX

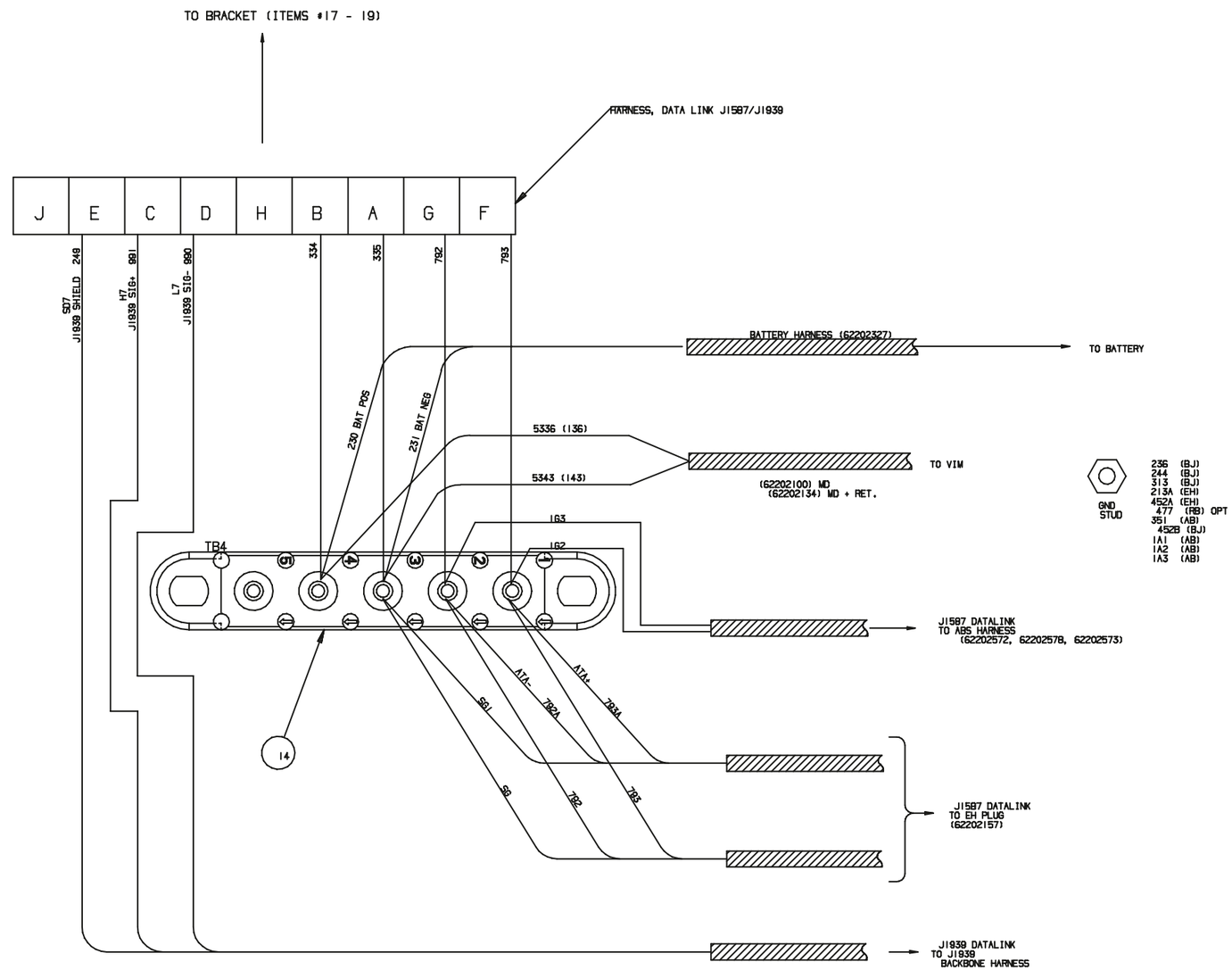

ON BOTTOM OF BOX

Thomas BUILT BUSES

62202696 D

ELECT. DIAGRAM MOD.
BOX COMPON. MTG. 98
CUMMINS ISB (CHASSIS)

Effective Date: 06/15/99

Sheet 3 of 3

FASTENER REQMTS (STANDARD) QTY PER ITEM	FASTENER PART NO.	QTY.	PART NO.	DESCRIPTION	ITEM
-	-	1	62201573	PANEL, INNER ELECTRICAL, MOD. REAR BOX, MVP-ER	1
1	61370334	4	61200709	RELAY - CONTROL, SPDT	2
2	61370334	3	61201491	BLOCK, JUNCTION - 8 POST FRONT ELECTRICAL CHASSIS	3
4	61370385	1	61201062	FUSE PANEL 6/8 POSITION	4
2	61370334	3	61200463	STUD, ELECTRICAL MTG.	5
2	61370337	1	61200728	SHUNT, 150 AMP. - 50 MILLIVOLT	6
-	-	1	61200343	FUSE - 5 AMP.	7
-	-	1	61200343	FUSE - 5 AMP. (OPT B2310-06-000) ONLY	7
-	-	1	61200953	CIRCUIT BREAKER - 8 AMP.	8
-	-	4	61200936	CIRCUIT BREAKER - 10 AMP.	9
-	-	2	61200871	CIRCUIT BREAKER - 20 AMP.	10
-	-	1	61200872	CIRCUIT BREAKER - 30 AMP.	11
-	-	1	61200163	CABLE ENTRY SEAL, 1.5" I.D. (NOT SHOWN)	12
-	-	1	62210087	DIODE/WIRE ASM., ALTERNATOR (DELCO)	13
-	-	1	62201309	CABLE, AMMETER SHUNT (OPT.)	14
-	-	1	61200772	FUSE, 2 AMP (NOT SHOWN) #310	15
-	-	1	61200159	FUSEHOLDER (NOT SHOWN) #310	16

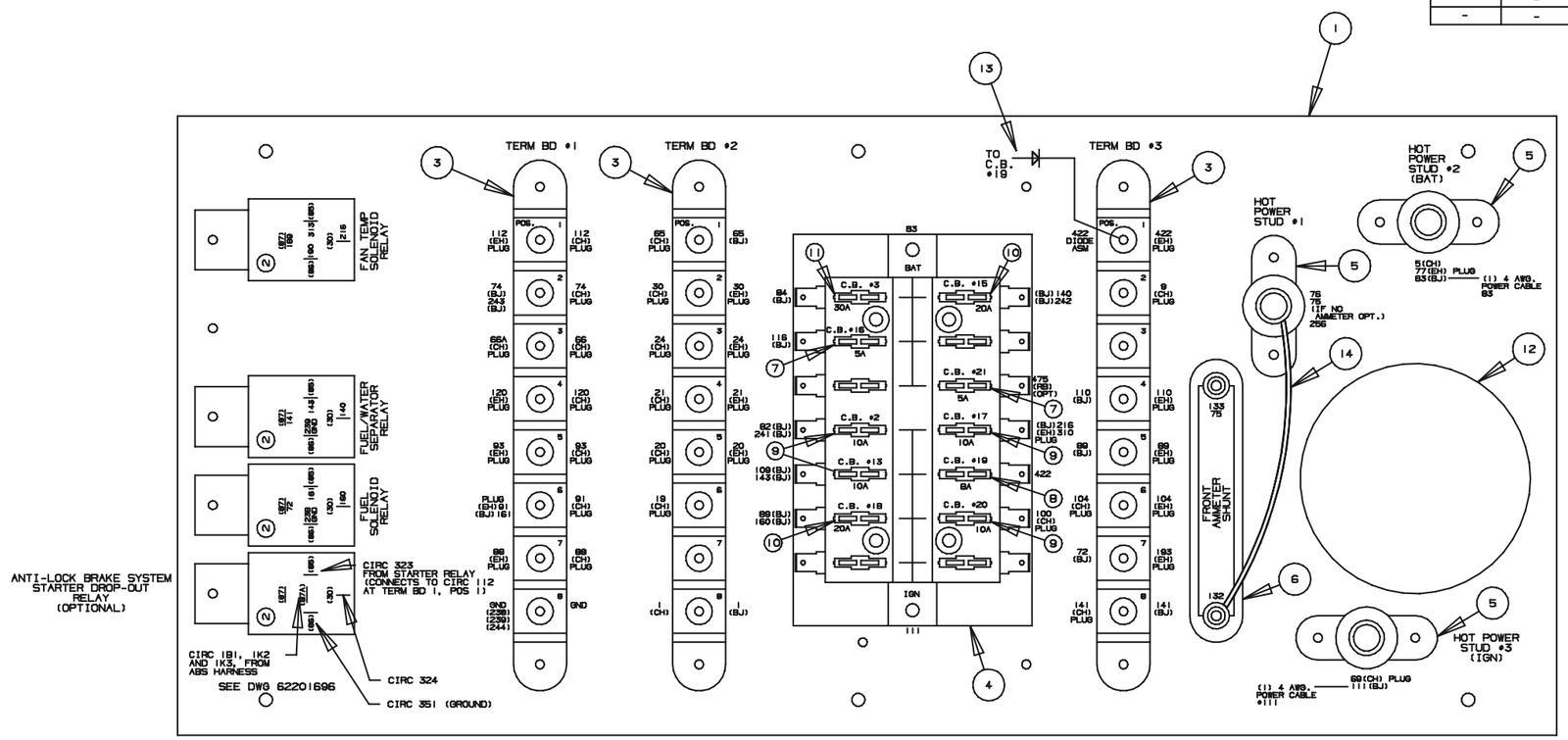

GND STUD IN MOD. REAR BOX

#106
#236
#244
#452A
#477 (RB) (OPT)

LEGEND

(CH) - CENTER HARNESS
(EH) - ENGINE HARNESS
(BJ) - MOD. BOX JUMPER
(BD) - BODY DROP-OUT OF REAR BOX
(RB) - ROLL-BACK ALARM HARNESS (OPT)

Thomas BUILT BUSES

62201743 G

ELECT. DIAGRAM MOD. BOX COMPON. MTG. CUMMINS 6C (CHASSIS)

FASTENER REQMTS (STANDARD) QTY PER ITEM	FASTENER PART NO.	QTY.	PART NO.	DESCRIPTION	ITEM
-	-	1	62201573	PANEL, INNER ELECTRICAL, MOD. REAR BOX, MVP-ER	1
1	61370334	4	61200709	RELAY - CONTROL, SPDT	2
2	61370334	3	61201491	BLOCK, JUNCTION - 8 POST FRONT ELECTRICAL CHASSIS	3
4	61370385	1	61201062	FUSE PANEL 6/8 POSITION	4
2	61370334	3	61200463	STUD, ELECTRICAL MTG.	5
2	61370337	1	61200728	SHUNT, 150 AMP. - 50 MILLIVOLT	6
-	-	1	61200343	FUSE - 5 AMP.	7
-	-	1	61200343	FUSE - 5 AMP. (OPT B2310-06-000) ONLY	7
-	-	1	61200953	CIRCUIT BREAKER - 8 AMP.	8
-	-	4	61200936	CIRCUIT BREAKER - 10 AMP.	9
-	-	2	61200871	CIRCUIT BREAKER - 20 AMP.	10
-	-	1	61200872	CIRCUIT BREAKER - 30 AMP.	11
-	-	1	61200163	CABLE ENTRY SEAL, 1.5" I.D. (NOT SHOWN)	12
-	-	1	62210087	DIODE/WIRE ASM., ALTERNATOR (DELCO)	13
-	-	1	62201309	CABLE, AMMETER SHUNT (OPT.)	14
-	-	1	61200772	FUSE, 2 AMP (NOT SHOWN) #310	15
-	-	1	61200159	FUSEHOLDER (NOT SHOWN) #310	16
-	-	1	61200411	RELAY, IGNITION POWER	17
-	-	1	62202668	RELAY LABEL, ABS START INTERLOCK	18
-	-	1	62202679	RELAY LABEL, FUEL SOLENOID	19
-	-	1	62202681	RELAY LABEL, FUEL/WATER SEPARATOR	20
-	-	1	62202678	RELAY LABEL, FAN TEMP. SOLENOID	21

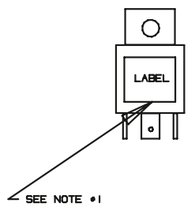

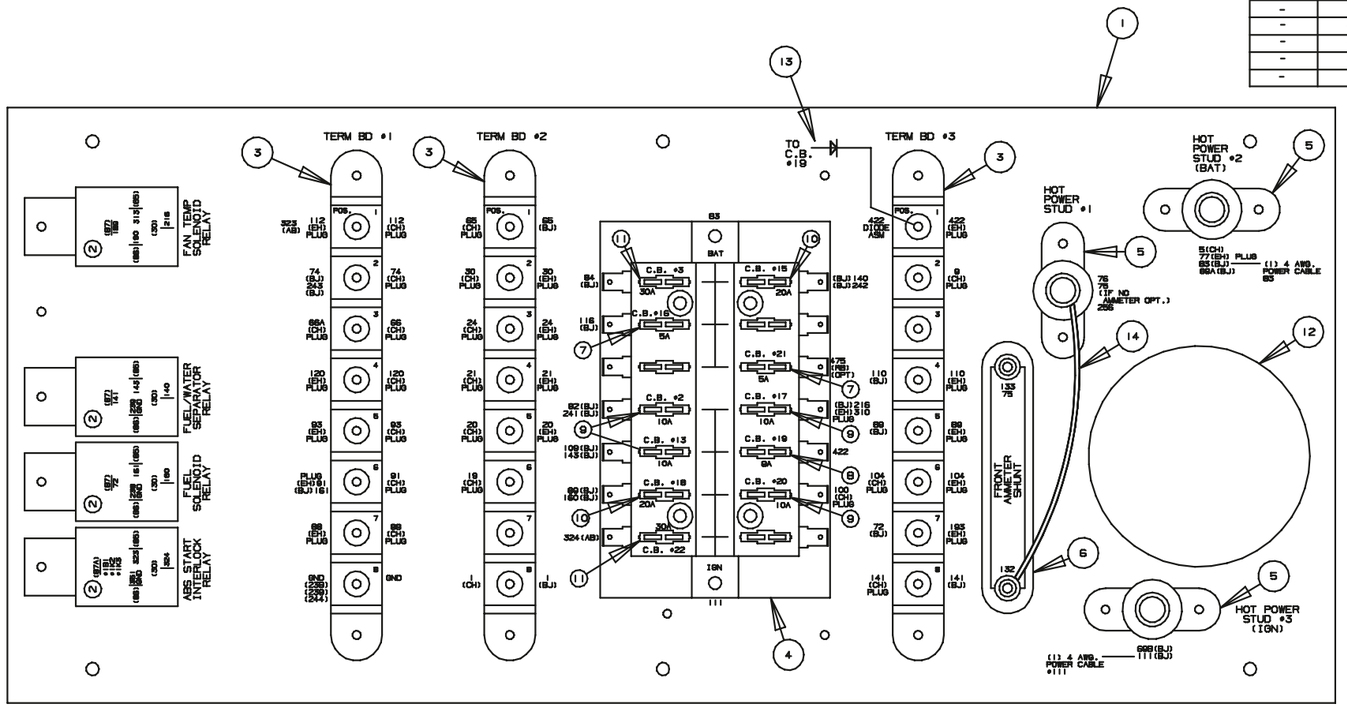

NOTES: 1)TYPICAL LABEL PLACEMENT: CENTERED ON FRONT FACE
2)REFER TO LABEL CALLOUT FOR PROPER LABEL USE

LEGEND

(CH) - CENTER HARNESS
(EH) - ENGINE HARNESS
(BJ) - MOD. BOX JUMPER
(BD) - BODY DROP-OUT OF REAR BOX
(RB) - ROLL-BACK ALARM HARNESS (OPT)
(AB) - ABS(EC-17)

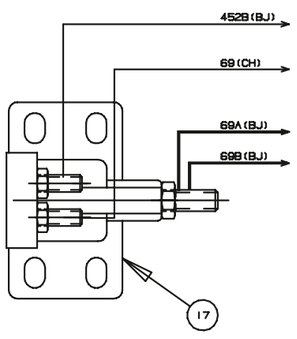

GND STUD IN MOD. REAR BOX

#106
#236
#244
#452A
#477 (RB) (OPT)
#351 (AB)
#452B

Thomas BUILT BUSES

62202614 D

ELECT. DIAGRAM MOD. BOX COMPON. MTG. 97 CUMMINS 6C (CHASSIS)

Effective Date: 05/12/98

DETAIL A

FAN TEMP SOLENOID RELAY

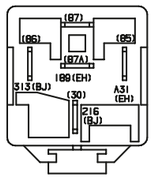

DETAIL B

FUEL/WATER SEPARATOR RELAY (OPT.)

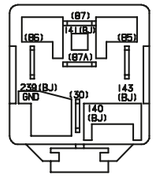

DETAIL C

ABS START INTERLOCK RELAY

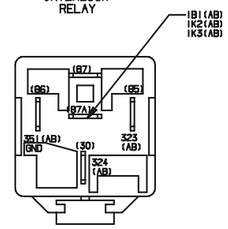

DETAIL D

KEY (ISC) IGNITION RELAY

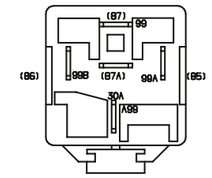

ITEM	QUANTITY	PART NUMBER	DESCRIPTION
1	1	61200100	START SWITCH
2	2	61200116	SWITCH, TOGGLE, SPST
3	3	61200130	BLOCK, JUNCTION - 8 POST FRONT ELECTRICAL CHASSIS
4	1	61200163	SEAL, CABLE ENTRY, 1 1/2 IN.
5	1	61200218	GAUGE - 2 INCH OIL PRESSURE
6	3	61200343	FUSE - 5 AMP AUTOFUSE TYPE,
7	1	61200411	CONTACTOR, POWER, 12 VDC
8	3	61200463	STUD, ELECT. - MOUNTING TERMINAL BD., 3/8-16
9	3	61200709	RELAY - CONTROL WITH MTG. BRACKET,
10	1	61200728	SHUNT, AMMETER
11	1	61201062	FUSE PANEL - 14 POSITION ATC FUSING, DOUBLE BUSS INPUT
12	1	61201095	CIRCUIT BREAKER - 150 AMP 30V DC, MANUAL RESET W/SW.
13	1	61201114	RELAY - CONTROL W/ MTG. BRACKET, COIL SUPPRESS
14	1	61201434	JUNCTION BLOCK, 5 POST, 10-32 STUD TYPE,
15	1	61201442	CIRCUIT BREAKER, 8 AMP 14 VDC, AUTO RESET
16	4	61201443	CIRCUIT BREAKER, 10 AMP 14 VDC, AUTO RESET
17	1	61201445	CIRCUIT BREAKER, 20 AMP 14 VDC, AUTO RESET
18	2	61201447	CIRCUIT BREAKER, 30 AMP 14 VDC, AUTO RESET
19	4	61370026	SCREW - MACHINE, #4-40 X 3/8 ROUND HEAD, ZINC
20	4	61370027	LOCK NUT - NYLON INSERT #4-40, ZINC
21	2	61370036	SCREW-MACHINE, TRUSS HEAD, PHILLIPS (BLACK OXIDE)
22	2	61370038	NUT-LOCK W/ ELASTIC 8-32
23	1	62201573	PANEL, INNER ELECTRICAL MODULAR REAR ELECT. BOX
24	1	62202087	BRACKET-MTG., OFF BOARD DIAGNOSTIC CONNECTOR PLUG
25	1	62202232	ELECTRICAL BOX, MODULAR REAR WELDED ASSEMBLY, MVP-ER
26	1	62202668	CHART, RELAY LABELS ABS START-INTERLOCK
27	1	62202678	CHART, RELAY LABELS FAN TEMPERATURE SOLENOID
28	1	62202680	CHART, RELAY LABELS FUEL/WATER SEPARATOR
29	1	62202687	CHART, RELAY LABELS KEY IGNITION

NOTE: ADDITIONAL PARTS SHOWN ON SHEETS 2 AND 3

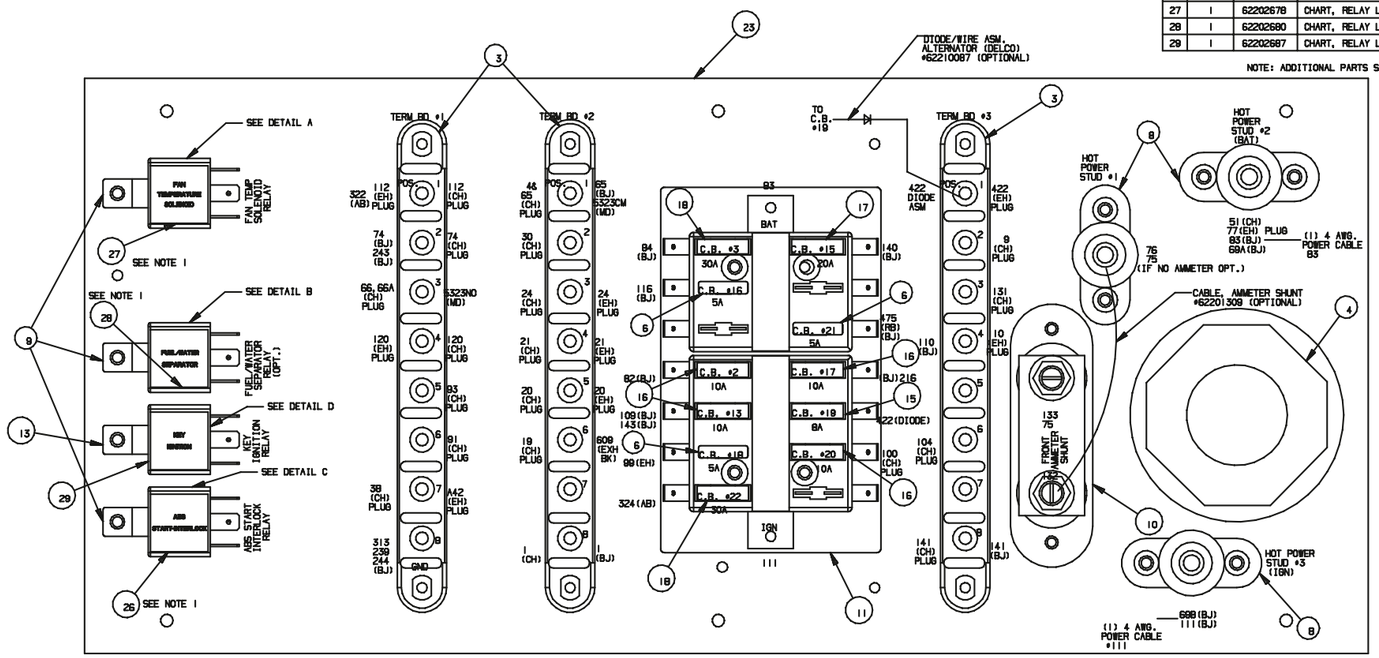

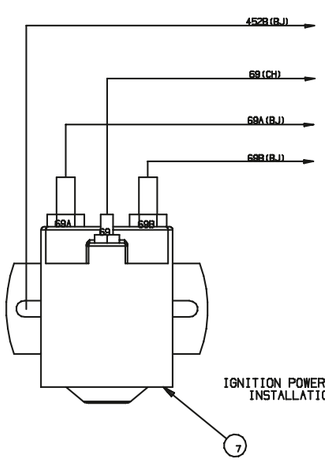

IGNITION POWER RELAY INSTALLATION

NOTES:
1) TYPICAL RELAY LABEL PLACEMENT: CENTERED ON FRONT FACE OF RELAY, TO READ PARALLEL TO GROUND WHEN MOUNTED.

LEGEND

(CH) - CENTER HARNESS
(EH) - ENGINE HARNESS
(BJ) - MOD. BOX JUMPER
(BD) - BODY DROP-OUT OF REAR BOX
(RB) - ROLL-BACK HARNESS (OPT)
(AB) - ABS
(MD) - MTEC III

Sheet 1 of 3

Thomas BUILT BUSES

62202638 G

ELECT. DIAGRAM MOD. BOX COMPON. MTG. 98 CUMMINS ISC (CHASSIS)

Effective Date: 06/15/98

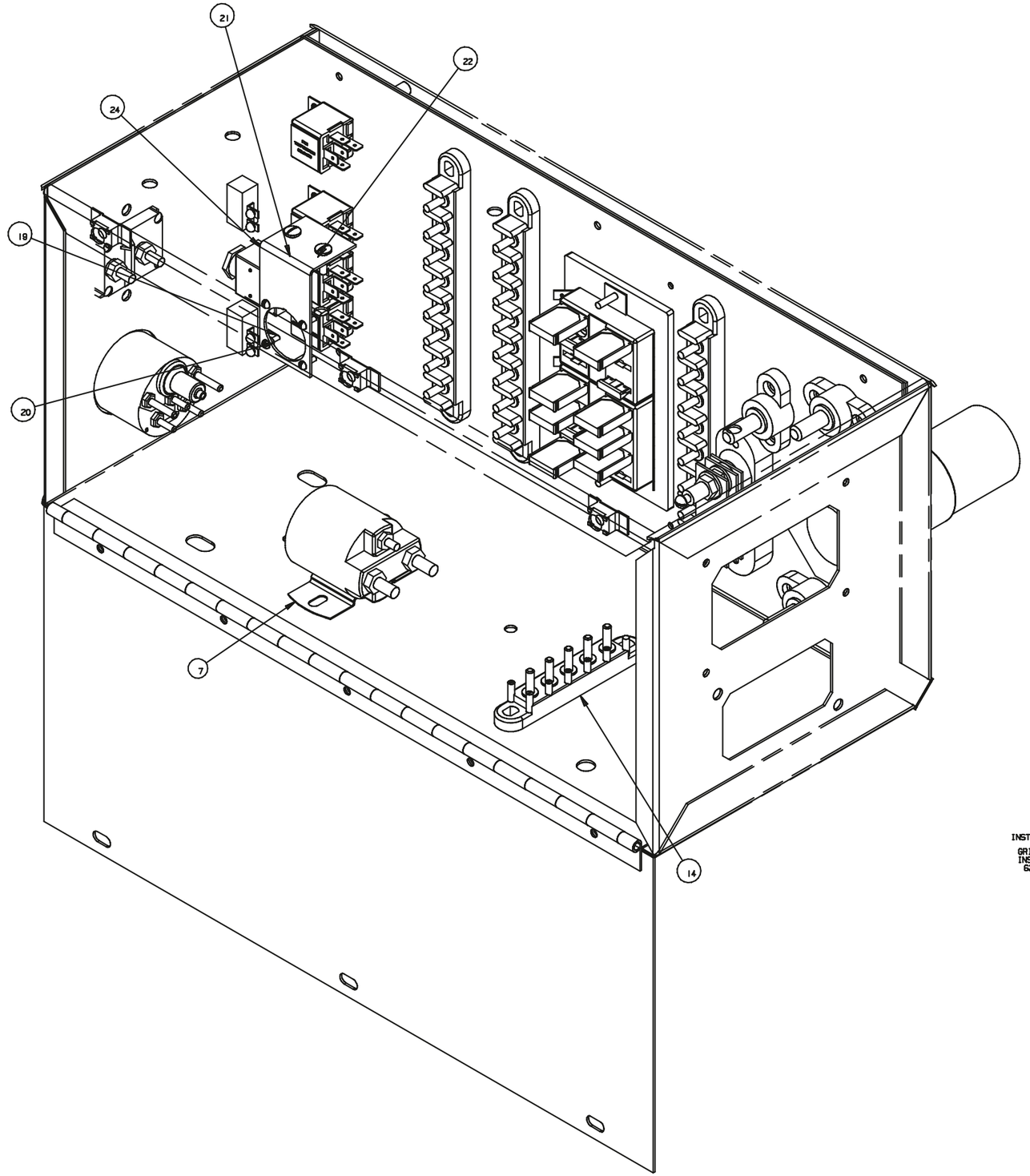

INSTALLATION OF DATA-LINK BRACKET

GRID HTR MTG. BRACKET INSTALLATION, SEE DWG. 62202301.

Sheet 2 of 3

Thomas BUILT BUSES

62202638 G

ELECT. DIAGRAM MOD. BOX COMPON. MTG. 98 CUMMINS ISC (CHASSIS)

Effective Date: 06/15/98

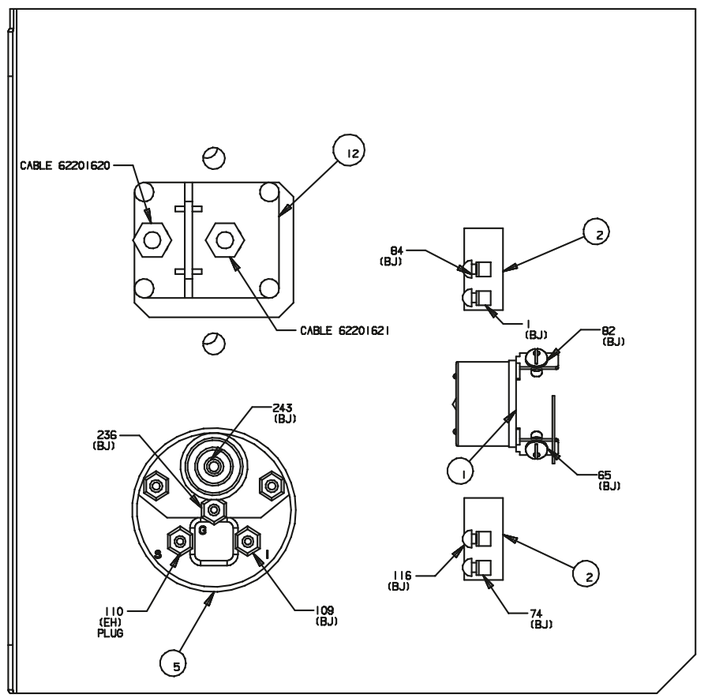

REAR BOX: BACK PANEL
VIEWED FROM INSIDE BOX

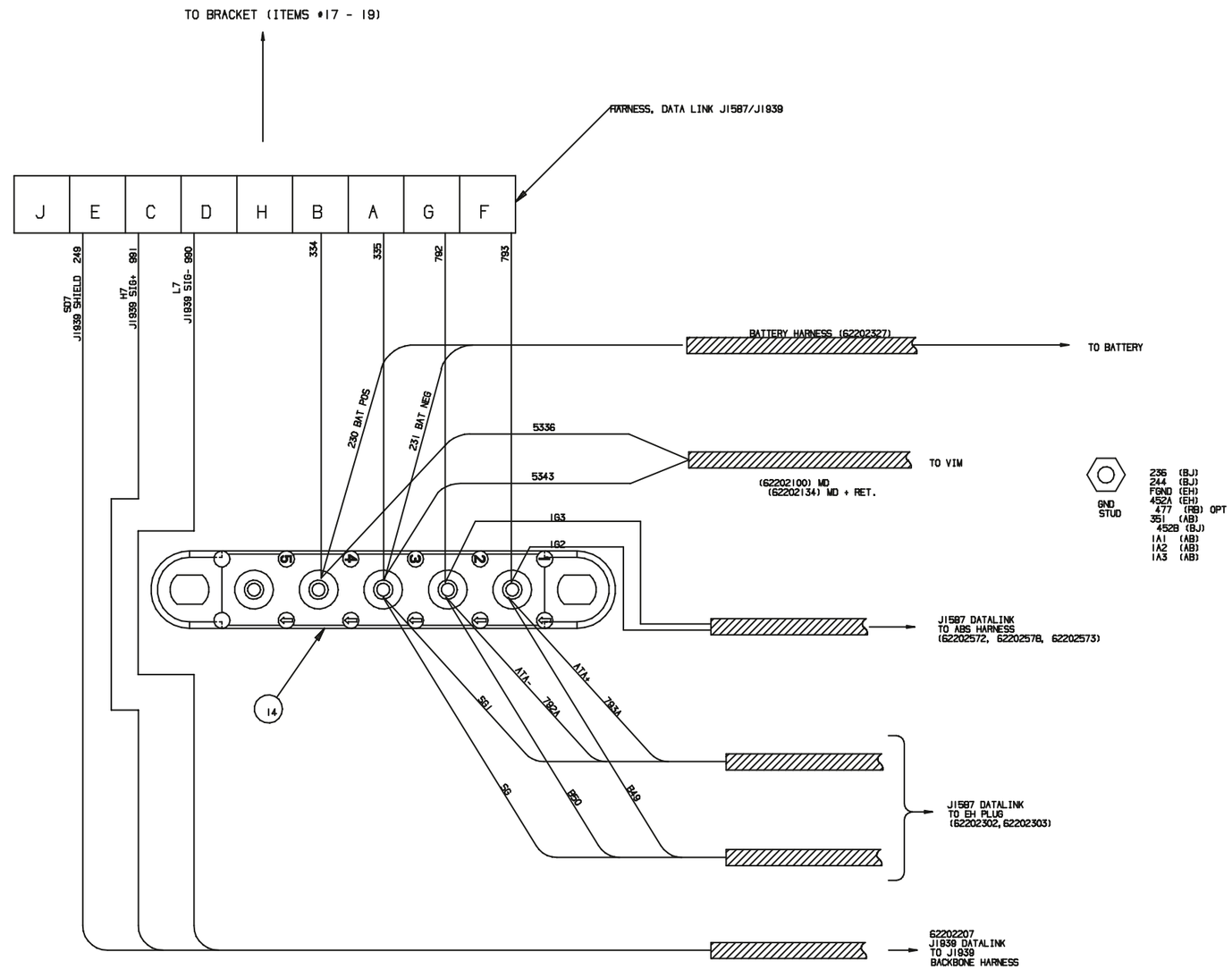

ON BOTTOM OF BOX

Thomas BUILT BUSES

62202638 G

ELECT. DIAGRAM MOD. BOX COMPON. MTG. 98 CUMMINS ISC (CHASSIS)

Effective Date: 06/15/98

Sheet 3 of 3

CIR	GA	COLOR	DESCRIPTION
1	12	BLACK	LEFT REAR WARNING LIGHT (RED)
2	12	BROWN	RIGHT FRONT WARNING LIGHT (RED)
3	12	ORANGE	RIGHT REAR WARNING LIGHT (RED)
			RIGHT RED WARNING LIGHT FEED
4	12	YELLOW	LEFT FRONT WARNING LIGHT (RED)
5	12	BLUE	LEFT REAR WARNING LIGHT (AMBER)
			LEFT AMBER WARNING LIGHT FEED
6	12	WHITE	RIGHT FRONT WARNING LIGHT (AMBER)
			FRONT AMBER WARNING LIGHT FEED
7	12	RED	RIGHT REAR WARNING LIGHT (AMBER)
			RIGHT AMBER WARNING LIGHT FEED
8	12	GREEN	LEFT FRONT WARNING LIGHT (AMBER)
9	16	DARK GREEN	RIGHT TURN SIGNAL (REAR & FRONT SIDE)
10	16	YELLOW	LEFT TURN SIGNAL (REAR & FRONT SIDE)
11	16	BROWN	RIGHT TAIL LIGHT
12	16	BROWN/WHITE	LEFT TAIL LIGHT
13	16	BLUE	RIGHT BACK-UP LIGHT
14	16	BLUE/WHITE	LEFT BACK-UP LIGHT
15	16	RED	RIGHT BRAKE LIGHT
16	16	RED/WHITE	LEFT BRAKE LIGHT
17	16	WHITE	MARKER LIGHTS (REAR)
18	16	WHITE/BLACK	PANEL LIGHTS
19	12	BLACK	INTERIOR LIGHTS
20	16	WHITE/BLACK	INTERIOR LIGHTS
21	12	BLACK	INTERIOR LIGHTS
22	16	BLUE	POWER VENT OR EXTRA
23	16	RED/BLACK	POWER VENT OR EXTRA
24	16	GREEN/WHITE	POWER VENT OR EXTRA
25	16	GREEN/BLACK	POWER VENT OR EXTRA
26	16	WHITE/BLACK	REAR DESTINATION SIGN
27	16	WHITE/BLACK	FRONT DESTINATION SIGN
28	16	YELLOW	RADIO POWER (BATT.)
29	16	DARK BLUE	REAR DOOR BUZZER (GND)
30	16	LIGHT BLUE	PULL CORD OR PUSH OUT SASH (GND)
31	16	WHITE/BLACK	SIDE DOOR BUZZER (GND)
32	16	YELLOW	VANDALOCK (GND)
33	16	WHITE	BUZZER FEED (REAR OR SIDE DOOR)
34	14	RED	FAN (OVERHEAD) OR EXTRA
35	14	WHITE	FAN (OVERHEAD) OR EXTRA
36	14	YELLOW	FAN (OVERHEAD) OR EXTRA
37	14	GREEN	FAN (OVERHEAD) OR EXTRA
38	16	PURPLE/BLACK	STROBE LIGHT OR EXTRA
39	16	PURPLE/WHITE	EXTRA
40	16	WHITE	MARKER LIGHTS (FRONT)
41	12	GREEN/WHITE	DEFROST LEFT (LOW) - ER
42	12	GREEN/BLACK	DEFROST LEFT (HIGH) - ER
43	12	RED/WHITE	DEFROST RIGHT (LOW) - ER
44	12	RED/BLACK	DEFROST RIGHT (HIGH) - ER
45	14	BLUE	STEPWELL HEAT (LOW) - ER
46	14	BLUE/WHITE	STEPWELL HEAT (HIGH) - ER
47	14	YELLOW	DRIVER'S HEAT (LOW) - ER
48	14	YELLOW/WHITE	DRIVER'S HEAT (HIGH) - ER
49	16	YELLOW	FRONT LEFT TURN SIGNAL (ER ONLY)
50	16	DK. GREEN	FRONT RIGHT TURN SIGNAL (ER ONLY)

CIR	GA	COLOR	DESCRIPTION
51	16	BROWN/WHITE	PARKING LIGHTS
52	16	BLUE/WHITE	STEPWELL LIGHT (DOOR SWITCH)
52A	16	BLUE/WHITE	STEPWELL LIGHT (DOOR SWITCH)
52B	16	BLUE/WHITE	STEPWELL LIGHT (DOOR SWITCH)
53	16	BLUE	WARNING LIGHT DOOR SWITCH TO GROUND
54	16	PURPLE	EXTRA
55	16	YELLOW	WARNING LIGHT PILOT LIGHT (AMBER) - 5
56	16	RED	WARNING LIGHT & STOP LIGHT PILOT LIGHT
			(RED) - 3
57	16	RED	WARNING LIGHT & STOP LIGHT PILOT LIGHT
			(RED) - 1
58	16	YELLOW	WARNING LIGHT PILOT LIGHT (AMBER) - 7
59	14	RED/BLACK	DOOR SW SIGNAL (GROUND) TO WARN LT FLASHER
60	14	RED/WHITE	LEFT WINDSHIELD WIPER (HIGH)
61	14	RED	RIGHT WINDSHIELD WIPER (HIGH)
62	14	GREEN/WHITE	LEFT WINDSHIELD WIPER (LOW)
63	14	GREEN	RIGHT WINDSHIELD WIPER (LOW)
64	14	BLACK/WHITE	LEFT WINDSHIELD WIPER (PARK)
65	14	BLACK	RIGHT WINDSHIELD WIPER (PARK)
66	14	BROWN	EXTRA
67	14	PURPLE/BLACK	WINDSHIELD WASHER
68	14	BLACK/WHITE	COLD IGNITION (ACC)
69	14	YELLOW/BLACK	FAN (NEW JERSEY DOOR SWITCH)
70	14	WHITE/BLACK	PANEL LIGHTS
71	14	BLACK	BOOSTER PUMP
72	16	BLACK/WHITE	WINDSHIELD WIPER SWITCH LIGHT
73	14	BROWN/WHITE	FAN
74	16	BLACK	STEPLIGHT
75	8	GREEN	GROUND
76	6	RED	CHASSIS TO BODY FEED
77	10	RED	FEED (WARNING LIGHTS)
78	14	BLACK	MASTER SWITCH TERMINAL ON WELDON
			FLASHER TO MASTER SWITCH
79	14	BLACK	MASTER SWITCH TO START SWITCH
80	14	GREEN	START SWITCH TO START SWITCH (+12V)
			TERMINAL ON FLASHER
81	14	BLUE	COLD IGNITION
82	14	BROWN	STOP ARM SWITCH TO STOP ARM SOLENOID
			TERMINAL ON FLASHER
83	14	BROWN/WHITE	STOP ARM SWITCH TO FUSE PANEL
84	12	WHITE	MASTER SWITCH TO FUSE PANEL
85	14	BLACK	REAR UNDERSEAT HEATER (HIGH)
86	14	RED	REAR UNDERSEAT HEATER (LOW)
87	14	GREEN	REAR UNDERSEAT HEATER (HIGH)
88	14	WHITE	REAR UNDERSEAT HEATER (LOW)
89	14	BLACK	FRONT UNDERSEAT HEATER (HIGH)
90	14	RED	FRONT UNDERSEAT HEATER (LOW)
91	14	GREEN	FRONT UNDERSEAT HEATER (HIGH)
92	14	WHITE	FRONT UNDERSEAT HEATER (LOW)
93	16	YELLOW	COWL MOUNTED LEFT TURN SIGNAL LIGHT
94	16	BROWN	STEPLIGHT FEED (OPTION 329)
95	16	RED	BRAKE PILOT LIGHT
96	16	BLACK	JUMPER FOR 358 - (3,4,5,& 6) WITH FLASHER
97	16	BLACK	JUMPER TO START SWITCH
98	16	RED	ELECTRIC STOP SIGN SWITCH
99	16	BROWN	WINDSHIELD WIPER FEED
100	16	YELLOW	HEATER FEED

CIR	GA	COLOR	DESCRIPTION
101	16	GREEN	DOOR SWITCH TO GROUND
102	16	RED	WINDSHIELD WASHER FEED
103	14	GREEN	DIMMER SWITCH TO CLEARANCE LIGHT SWITCH
104	14	WHITE	DIMMER SWITCH (COMMON) TO CLEARANCE LIGHTS
105	14	RED	DIMMER SWITCH TO ELECTRONIC FLASHER
106	14	RED	ROOF MOUNTED AIR CONDITIONER
107	14	WHITE	ROOF MOUNTED AIR CONDITIONER
108	14	GREEN	ROOF MOUNTED AIR CONDITIONER
109	18	VIOLET/BLACK	RIGHT REAR SPEAKER (-)
110	18	VIOLET	RIGHT REAR SPEAKER (+)
111	18	GREEN	LEFT REAR SPEAKER (+)
112	18	GREEN/BLACK	LEFT REAR SPEAKER (-)
113	16	DARK BLUE	ESCAPE HATCH BUZZER
114	14	RED	RIGHT FRONT HEATER (LOW) - CONV.
115	14	RED/BLACK	RIGHT FRONT HEATER (HIGH) - CONV.
116	14	YELLOW	RIGHT FRONT HEATER (LOW) - CONV.
117	14	YELLOW/BLACK	RIGHT FRONT HEATER (HIGH) - CONV.
118	14	GREEN	RIGHT FRONT DEFROSTER (LOW) - CONV.
119	14	GREEN/BLACK	RIGHT FRONT DEFROSTER (HIGH) - CONV.
120	14	RED	STEPWELL DEFROSTER (LOW) - CONV.
121	14	RED/BLACK	STEPWELL DEFROSTER (HIGH) - CONV.
122	14	GREEN	STEPWELL HEATER (LOW) - CONV.
123	14	GREEN/BLACK	STEPWELL HEATER (HIGH) - CONV.
124	12	BLACK	FUSE PANEL FEED
125	16	GREEN	RIGHT FRONT HEATER (LOW) - MMFC
126	16	GREEN/BLACK	RIGHT FRONT HEATER (HIGH) - MMFC
127	16	RED	RIGHT FRONT HEATER (LOW) - MMFC
128	16	RED/BLACK	RIGHT FRONT HEATER (HIGH) - MMFC
129	16	YELLOW	RIGHT FRONT DEFROSTER (LOW) - MMFC
130	16	YELLOW/BLACK	RIGHT FRONT DEFROSTER (HIGH) - MMFC
131	16	BLUE	RIGHT FRONT DEFROSTER (LOW) - MMFC
132	16	BLUE/BLACK	RIGHT FRONT DEFROSTER (HIGH) - MMFC
133	16	PURPLE/WHITE	ROLL SIGN
134	16	PURPLE	ROLL SIGN
135	16	PURPLE	ROLL SIGN LIGHT
136	16	GREEN/BLACK	BODE DOOR (FRONT)
137	16	GREEN/WHITE	BODE DOOR (FRONT)
138	14	BROWN	EVAPORATOR COOLER
139	14	BROWN/WHITE	EVAPORATOR COOLER
140	14	GREEN	CHIME
141	14	GREEN/WHITE	REAR WINDOW WINDSHIELD WIPER
142	14	WHITE/BLACK	BODE DOOR (SIDE)
143	14	RED	BODE DOOR (SIDE)
144	14	ORANGE	BODE DOOR (SIDE)
145	14	GREEN	BODE DOOR (SIDE)
146	16	GREEN	SIGN OR CLEARANCE LIGHT
147	16	WHITE	SIGN OR CLEARANCE LIGHT
148	16	BLUE	FAN - CONV.
149	14	BLACK	RELAY TO FUSE PANEL TO FLASHER MOTOR
150	16	RED	FREQ. CONVERTER TO COLD IGNITION
			TO TACHOGRAPH

Thomas BUILT BUSES

52001068 H

CHART - CIRCUITS, ELECTRICAL (BODY)

SHEET 1 OF 5

CIR	GA	COLOR	DESCRIPTION
151	16	WHITE	FREQ. CONVERTER TO SPEEDOMETER
152	16	BLUE	FREQ. CONVERTER TO SPEEDOMETER
153	16	BLACK	TACHOGRAPH TO HOT FEED (BATTERY)
154	16	GRAY	TACHOGRAPH TO HEADLIGHT SWITCH
155	14	BLACK	RELAY TO 358 HARNESS
156	16	YELLOW	HI-BEAM HEADLIGHT
157	16	YELLOW/BLACK	LO-BEAM HEADLIGHT
158	16	WHITE	HEADLIGHT GROUND
159	16	WHITE/BLACK	TURN SIGNAL LIGHT GROUND
160	14	BLACK	WARNING LIGHT MONITOR FEED (RED) - 1
161	14		
162	14	ORANGE	WARNING LIGHT MONITOR FEED (RED) - 3
163	14		
164	14	BLUE	WARNING LIGHT MONITOR FEED (AMBER) - 5
165	14		
166	14	RED	WARNING LIGHT MONITOR FEED (AMBER) - 7
167	14		
168	14	BROWN	TAIL LIGHT FEED
169	16	BROWN/BLACK	TAIL LIGHT (CHASSIS TO TAIL LIGHT RELAY)
170	14	BLUE	BACK-UP LIGHT FEED
171	14		
172	14	RED	BRAKE LIGHT FEED
173	14		
174	14	YELLOW	LEFT TURN SIGNAL FEED
175	14	DARK GREEN	RIGHT TURN SIGNAL FEED
176	16	BLACK	DORAN FEED
177	16	WHITE	DORAN GROUND
178	14	BLACK	REMOTE CONTROL VENT SPEED CONTROL SW. (GND)
179	14	WHITE	REMOTE CONTROL VENT DIRECTION SWITCH
180	18	GREEN	REMOTE CONTROL VENT INDICATOR LIGHT
181	18	WHITE	REMOTE CONTROL VENT GROUND
182	18	RED	REMOTE CONTROL VENT MOTOR CONTROL SW.
183	18	ORANGE	REMOTE CONTROL VENT MOTOR CONTROL SW.
184	18	BROWN	REMOTE CONTROL VENT MOTOR CONTROL SW.
185	18	BLACK	REMOTE CONTROL VENT MOTOR CONTROL SW.
186	14	RED	T2 A.C. UNIT DRIVER'S SWITCH (8)
187	14	YELLOW	T2 A.C. UNIT HIGH - LOW SWITCH (8A)
188	14	ORANGE	T2 A.C. UNIT AUTO SWITCH (14)
189	14	GREEN/BLACK	T2 A.C. UNIT AUTO SWITCH (14A)
190	14	GREEN/WHITE	T2 A.C. UNIT AUTO SWITCH (10A)
191	14	GREEN	T2 A.C. UNIT AUTO SWITCH (10)
192	14	BLUE	T2 A.C. UNIT DRIVER'S ON LIGHT (36D)
193	14	BLUE/BLACK	T2 A.C. UNIT DRIVER'S ON LIGHT (CH)
194	14	BLUE/WHITE	T2 A.C. UNIT ON-OFF SWITCH (8AA)
195	14	BLACK	SWITCH TO #9 TERMINAL ON FLASHER
196	14	BLACK	SWITCH TO RELAY
197	14	GREEN	FEED TO SWITCH
198	14	YELLOW	PILOT LIGHT (AMBER) TO GROUND
199	14	GREEN	AMBER LIGHT SWITCH TO #11 TERMINAL ON FLASHER
200	16	YELLOW	PILOT LIGHT (AMBER) TO #6 TERMINAL ON FLASHER

CIR	GA	COLOR	DESCRIPTION
201	16	RED	PILOT LIGHT (RED) TO #1 TERMINAL ON FLASHER
202	16	WHITE	STOP ARM SWITCH TO RELAY (86)
203	16	WHITE	RELAY (86) TO RELAY (87)
204	14	RED	STOP ARM SWITCH TO RELAY (30)
205	14	RED	RELAY (30) TO #3 TERMINAL ON FLASHER
206	14	BLACK	RELAY GROUND
207	14	BLACK	PILOT LIGHT RELAY TO MASTER SWITCH ON FLASHER - MARYLAND
208	16	RED	PILOT LIGHT (RED) TO GROUND
209	16	RED	JUMPER FOR PILOT LIGHT
210	16	GREEN	GROUND JUMPER
211	10	RED	FUSE PANEL TO #6 TERMINAL ON FLASHER
212	10	BLUE	FUSE PANEL TO #12 TERMINAL ON FLASHER
213	10	ORANGE	FUSE PANEL TO #1 TERMINAL ON FLASHER
214	10	BLACK	FUSE PANEL TO #7 TERMINAL ON FLASHER
215	14	BLACK	LEFT REAR WARNING LIGHT (RED) TO MONITOR
216	14	BROWN	RIGHT FRONT WARNING LIGHT (RED) TO MONITOR
217	14	ORANGE	RIGHT REAR WARNING LIGHT (RED) TO MONITOR
218	14	YELLOW	LEFT FRONT WARNING LIGHT (RED) TO MONITOR
219	14	BLUE	LEFT REAR WARNING LIGHT (AMBER) TO MONITOR
220	14	WHITE	RIGHT FRONT WARNING LIGHT (AMBER) TO MONITOR
221	14	RED	RIGHT REAR WARNING LIGHT (AMBER) TO MONITOR
222	14	GREEN	LEFT FRONT WARNING LIGHT (AMBER) TO MONITOR
223	14	RED	FEED TO OVERRIDE SWITCH
224	14	WHITE	OVERRIDE SWITCH TO #3 TERMINAL ON FLASHER
225	16	RED	START SWITCH PILOT LIGHT TO #12 TERMINAL ON FLASHER
226	16	WHITE	PILOT LIGHT (RED) TO #7 TERMINAL ON FLASHER
227	14	BLUE	LIFTS, MEMORY RADIO, BUZZER, SIDE LIGHTS & A/C
228	14	BLACK	A.C. & FANS (BONDED)
229	14	WHITE	A.C. & FANS (BONDED)
230	18	ORANGE	EXTERNAL HORN(+)
231	18	WHITE/BLACK	EXTERNAL HORN (-)
232	10	YELLOW	ELECTRICAL STEP
233	14	BLACK	A.C. & CHIME
234	8	RED	A.C. TO EVAPORATOR GROUND
235	14	BLACK	EVAPORATOR RELAY TO PRESSURE SWITCH
236	16	RED	A.C. SWITCH TO MAIN RELAY
237	16	BLUE	COLD SIDE OF FAN HI - LO SWITCH TO FAN RELAY LS EVAPORATOR
238	14	GREEN	COLD SIDE THERMOSTAT TO R.H. EVAPORATOR FREEZE SWITCH
239	14	BLUE	14 AMP FEEDER BREAKER (FIREWALL) TO HOT SIDE THERMOSTAT
240	16	YELLOW	MAIN SWITCH TO ENGINE SPEED SOLENOID (CARB)
241	14	BLACK	HI-LO PRESSURE SWITCH (CONDENSOR) TO COMPRESSOR RELAY (FIREWALL)
242	8	BLUE	MAIN RELAY (FIREWALL) TO HI-LO RELAY "BATT" LS EVAPORATOR
243	8	BLUE	HI-LO RELAY "BATT" TO CONDENSOR FANS
244	8	BLUE	HI-LO RELAY "BATT" TO LO SPEED FANS RS EVAPORATOR
245	8	BLACK	HI-LO RELAY "COLD" TO HI SPEED FANS RS EVAPORATOR
246	14	GREEN	FREEZE L.S. EVAPORATOR TO FREEZE SWITCH SWITCH RS EVAPORATOR
247	14	WHITE	FREEZE SWITCH L.S. EVAPORATOR TO HI-LO PRESSURE SW. (CONDENSOR)
248	16	RED	14 AMP BREAKER, SW. CABINET (COLD SIDE IGN. RELAY) TO A.C. SW. (DASH)
249	16	BLUE	COLD SIDE CONTROL RELAY TO "BATT" SIDE OF 14 AMP BREAKER
250	16	WHITE	AUX. SIDE OF 14 AMP BREAKER TO "BATT" SIDE CLUTCH RELAY

CIR	GA	COLOR	DESCRIPTION
251	16	WHITE	COLD SIDE CLUTCH RELAY TO COMPRESSOR CLUTCH
252	14	YELLOW	GROUND JUMPER FOR ENGINE SPEED SOLENOID
253	16	BLUE	COLD SIDE OF THERMOSTAT TO FEED SIDE FAN HIGH-LOW SWITCH
254	10	BLACK	SWAMP COOLER
255	14	WHITE	WELDON STROBE LIGHT SYSTEM FEED
256	14	BLACK	WELDON STROBE LIGHT SYSTEM GROUND
257	16	RED	STROBE LIGHT DOOR SWITCH FEED
258	16	BLACK	STROBE LIGHT DOOR SWITCH COMMON
259	16	WHITE	STROBE LIGHT DOOR SWITCH NEGATIVE
260	16	WHITE	STROBE LIGHT FOOT SWITCH
261	16	BLACK	STROBE LIGHT FOOT SWITCH
262	14	RED	CONTROL TO POWER SUPPLY (FEED)
263	14	BLACK	CONTROL TO POWER SUPPLY (COMMON)
264	16	WHITE	CONTROL TO POWER SUPPLY (NEGATIVE)
265	16	ORANGE	CONTROL TO POWER SUPPLY (RED LIGHTS)
266	16	GREEN	CONTROL TO POWER SUPPLY (AMBER LIGHTS)
267	14	GREEN	RELAY (1) TO REMOTE REGULATOR (+)
268	14	RED	RELAY (2) TO ALTERNATOR (+)
269	14	BROWN	RELAY (3) TO IGNITION SWITCH
270	14	BLUE	REMOTE REGULATOR (F) TO ALTERNATOR (F)
271	14	BLACK	REMOTE REGULATOR (-) TO ALTERNATOR (-)
272	14	GREEN	REMOTE REGULATOR (+) TO ALTERNATOR (F)
273	14	WHITE	TIME DELAY RELAY (2) TO GREEN READY PILOT LIGHT
274	14	BROWN	TIME DELAY RELAY (8) TO WAVE SWITCHES
275	14	GREEN	WAVE SWITCHES TO TIME DELAY RELAY (7)
276	14	YELLOW	RELAY (85) TO EMERGENCY RELEASE PRESSURE SWITCH
277	16	RED	ENGINE COMP LT. SW. TO ENGINE COMP LIGHTS
278	16	RED	CON 6, PIN 1, FRONT DOOR #1 PILOT
279	16	BLUE	CON 6, PIN 2, REAR DOOR #2 PILOT
280	16	BLACK	CON 6, PIN 3, SPARE
281	16	RED/WHITE	CON 6, PIN 4, FRONT & REAR DOOR PILOTS
282	16	GREEN	CON 6, PIN 5, PASSENGER STOP LAMP
283	16	RED/BLACK	CON 6, PIN 6, A/C FROM A/C POWER SWITCH
284	16	BROWN	CON 6, PIN 7, DEST. SIGN (FRONT) SWITCH
285	16	YELLOW	CON 6, PIN 8, DEST. SIGN (SIDE) SWITCH
286	16	PURPLE	CON 6, PIN 9, FOG LAMP SWITCH
287	16	ORANGE	CON 6, PIN 10, EMERGENCY SIDE EXIT SWITCH
288	16	WHITE	CON 6, PIN 11, GROUND (MAIN IN)
289	16	YELLOW/BLACK	CON 6, PIN 12, GROUND (MAIN IN)
290	16	BROWN/WHITE	CON 6, PIN 13, SPARE
291	16	BLACK/WHITE	CON 6, PIN 14, SPARE
292	16	ORANGE/BLACK	CON 6, PIN 15, PASSENGER STOP LAMP
293	16	GREEN/WHITE	CON 6, PIN 16, SPARE
294	14	RED	CON 7, PIN 1, +12V POWER (DRIVERS DOME)
295	16	GREEN	CON 7, PIN 2, +12V LIGHT DIMMER IN (TB7)
296	14	RED/WHITE	CON 7, PIN 4, +12V POWER (INTERIOR LIGHT)
297	16	BROWN	CON 7, PIN 5, GROUND LIGHT DIMMER IN (TB2)
298	14	RED/BLACK	CON 7, PIN 7, +12V POWER (INTERIOR LIGHT)
299	14	ORANGE	CON 7, PIN 8, SPARE
300	14	WHITE/BLACK	CON 8, PIN 1, MARKER LIGHT SWITCH

Thomas BUILT BUSES

52001068 H

CHART - CIRCUIT, ELECTRICAL (BODY)

SHEET 2 OF 5

CIR	GA	COLOR	DESCRIPTION
301	14	BLACK	CON #8, PIN 1, MARKER LIGHT SWITCH
302	14	BLACK/WHITE	CON #8, PIN 4, LIGHT DIMMER GROUND (TB5)
303	14	RED	CON #8, PIN 6, LIGHT DIMMER +12V (TB7)
304	14	RED/WHITE	CON #8, PIN 7, DOOR POWER (FEED +12 V.)
305	14	BLUE	CON #8, PIN 8, DOOR POWER (FROM SWITCH)
306	14	BROWN	CON #8, PIN 9, SPARE
307	14	BROWN/WHITE	CON #8, PIN 10, FRONT DESTINATION SIGN (FEED + 12V)
308	14	BLUE/WHITE	CON #8, PIN 11, FRONT DESTINATION SIGN (FROM SWITCH)
309	14	PURPLE	CON #8, PIN 12, SPARE
310	14	GREEN	CON #8, PIN 13, SPARE
311	14	GREEN/WHITE	CON #8, PIN 14, T2 FAN SWITCH (LOW)
312	14	ORANGE	CON #8, PIN 15, T2 FAN SWITCH (POWER IN)
313	14	YELLOW	CON #8, PIN 16, BOOSTER HEAT PUMP SWITCH (+12V)
314	14	YELLOW/WHITE	CON #8, PIN 17, DEFROST MIRROR #1 (FEED +12V)
315	14	GREEN/BLACK	CON #8, PIN 18, DEFROST MIRROR #1 (FROM SWITCH)
316	14	BROWN/BLACK	CON #8, PIN 19, T2 FAN SWITCH (HIGH)
317	14	ORANGE/WHITE	CON #8, PIN 20, OVERHEAD FAN #1 (FEED +12V)
318	14	YELLOW/BLACK	CON #8, PIN 21, BOOSTER HEAT PUMP POWER OUT
319	14	BLUE/BLACK	CON #8, PIN 23, OVERHEAD FAN #2 SWITCH (FEED +12V)
320	14	YELLOW/BLACK	CON #9, PIN 1, STEPWELL HEATER (+12V)
321	14	WHITE	CON #9, PIN 5, DRIVER'S HEATER (+12V)
322	14	BROWN	CON #13, PIN 16, SPARE
323	14	YELLOW	CON #10, PIN 1, UNDERSEAT HEATER (+12V)
324	14	ORANGE	CON #10, PIN 2, UNDERSEAT HEATER (+12V)
325	14	YELLOW/BLACK	CON #13, PIN 11, SPARE
326	14	BROWN/BLACK	CON #11, PIN 1, LIGHT DIMMER (POWER IN)
327	14	ORANGE/BLACK	CON #11, PIN 2, REAR UNDERSEAT HEATER
328	14	RED	CON #11, PIN 4, LIGHT DIMMER GROUND
329	14	GREEN	CON #12, PIN 1, RIGHT SIDE DEFROSTER
330	14	WHITE	CON #12, PIN 2, LEFT SIDE DEFROSTER
331	14	RED/WHITE	CON #13, PIN 3, A/C CONTROL SWITCH FAN ONLY
332	14	RED/BLACK	CONN. #13, PIN 2, SPARE
333	14	BLUE	CONN. #13, PIN 4, LIGHT DIMMER POWER HEAT SWITCH (TB4)
334	14	BLUE/WHITE	CONN. #13, PIN 5, LIGHT DIMMER GROUND HEAT SWITCH (TB 2)
335	14	BLUE/BLACK	CON #13, PIN 6, LAMP DIMMER (+12 V. IN)
336	14	GREEN	CON #13, PIN 8, A/C CONTROL SWITCH PILOT LIGHT OUT
337	14	GREEN/WHITE	CON #13, PIN 9, A/C CONTROL SWITCH PILOT LIGHT (+12 V. IN)
338	14	GREEN/BLACK	CON #13, PIN 10, LAMP DIMMER GND (TB5)
339	14	BROWN	CON #13, PIN 12, T2 A/C POWER SWITCH PILOT LIGHT OUT
340	14	BROWN/WHITE	CON #13, PIN 13, T2 A/C POWER SWITCH (TO CONTROLS OUT)
341	14	BROWN/BLACK	CON #13, PIN 14, LAMP DIMMER LOAD OUT (TB 4)
342	14	YELLOW	CON #13, PIN 15, T2 A/C POWER SWITCH (+ 12 V IN)
343	16	BLUE	HEADLIGHT RELAY (87A) TO FOG LIGHTS
344	14	RED	DOOR POWER SWITCH TO LS1
345	14	BLUE	LS1 TO R5 RELAY (85)
346	14	BROWN	R4 RELAY (87) TO REAR DOOR OPEN MAG VALVE
347	14	ORANGE	R3 RELAY (87) TO EXIT DOOR UNLOCK SOLENOID
348	14	YELLOW	5 POSITION DOOR SWITCH DECK NO. 2 (B) R3 RELAY (85)
349	14	WHITE	CON #8, PIN 2, MARKER LT. SWITCH (REAR)
350	14	WHITE	CON #8, PIN 3, MARKER LT. SWITCH (FRNT)

CIR	GA	COLOR	DESCRIPTION
351	14	GREEN	CON #8, PIN 5, SPARE
352	14	YELLOW	CON #8, PIN 22, WINDSHIELD DEFROST FAN SWITCN #1 (LOW)
353	14	YELLOW/BLACK	CON #8, PIN 24, WINDSHIELD DEFROST FAN SWITCH #1 (HIGH)
354	14	ORANGE/BLACK	CON #8, PIN 25, WINDSHIELD DEFROST FAN SWITCH #2 (LOW)
355	14	RED/BLACK	CON #8, PIN 26, WINDSHIELD DEFROST FAN SWITCH #2 (HIGH)
356	14	BLACK	CON #13, PIN 7, A/C CONTROL SWITCH A/C/ & FAN)
357	16	PINK	SWITCH CABINET JUMPERS
358	16	ORANGE	SWITCH CABINET JUMPERS
359	1	BLACK	BATTERY (+) TO EXTERNAL JUMP START BUTTON
360	1	BLACK	BATTERY (-) TO EXTERNAL JUMP START BUTTON
361	14	BLACK	5 POSITION DOOR SWITCH DECK NO. 2 TO LS2
362	14	GREEN	LS2 TO R4 RELAY (85)
363	14	BLACK/WHITE	BOOSTER PUMP FEED
364	14	ORANGE	DRIVERS UNDERSEAT HEATER FEED
365	14	BROWN	LEFT SIDE DEFROSTER FEED
366	14	BROWN/WHITE	RIGHT SIDE DEFROSTER FEED
367	14	YELLOW	SIGN SWITCH FEED
368	14	YELLOW/BLACK	INTERIOR LIGHT FEED
369	14	BLACK	R5 RELAY (87) & R6 RELAY (87) TO BRAKE OVERRIDE SW
370	14	WHITE	R1 RELAY (85) TO MORSE SHIFTER (CIRC #87)
371	14	BLUE/WHITE	R2 RELAY (87) TO FRONT DOOR SOLENOID VALVE
372	14	BROWN/WHITE	5 POS DOOR SW DECK NO. 1 (B) TO R2 & R6 RELAYS
373	14	GREEN	GROUND FOR DOOR RELAYS (86)
374	16	YELLOW	START SW PT LIGHT TO STOP ARM RELAY (30)
375	16	BROWN	STOP ARM SWITCH TO STOP ARM RELAY (86)
376	4	RED	CNTRL PANEL JUNCT. BLK. #1 TO ALT #2
377	4	RED	CNTRL PANEL JUNCTION BLOCK #5 TO ALT #1
378	4	BLACK	CNTRL PANEL GROUND STUD TO ALT GND STUD
379	8	WHITE	CNTRL PANEL TERM ST #7 TO CB ON REAR PANEL
380	14	RED	CNTRL PANEL TERM ST #3 TO ALT #1
381	14	WHITE	CNTRL PANEL TERM ST #6 TO AIR SOLENOID
382	14	BLACK	CNTRL PANEL TERM ST #4 TO ALT #2
383	4	RED	EVAP PANEL JB #7 TO CONDENSOR PANEL GND
384	8	WHITE	EVAP PANEL JB #6 TO CONTROL PANEL JB #6
385	8	GREEN	EVAP PANEL JB #4 TO CONTROL PANEL JB #4
386	16	BLUE	STOP ARM SOLENOID
387	14	BROWN	LEFT WIPER FEED - VISTA
388	14	TAN	RIGHT WIPER FEED - VISTA
389	14	BROWN/WHITE	LEFT WIPER SWITCH TO LEFT WIPER
390	14	TAN/WHITE	RIGHT WIPER SWITCH TO RIGHT WIPER
391	16	WHITE/BLACK	BACK LIGHTED LABEL LIGHTS
392	12	BLACK/WHITE	INTERIOR LIGHTS
393	8	RED	CHASSIS RELAY TO BODY RELAY (RHD)
394	16	BLUE	DOOR SWITCH RELAY (87) TO GROUND
395	16	DK GREEN	COWL MOUNTED RIGHT TURN SIGNAL LIGHT
396	12	RED	WTHR PACK CON (POS B) TO POS TERM ON BATT
397	12	BROWN	WTHR PACK CON (POS A) TO NEG TERM ON BATT
398	12	RED	WTHR PACK CON (POS. A) TO 72 HR. POS 1 TIMER (RD) AMP CON POS 1 TO ON-OFF SW
399	12	BLACK	WTHR PACK CON (POS. B) TO ON-OFF SWITCH
400	14	YELLOW	WTHR PACK CON (POS. C) TO 72 HR. TIMER (YE) AMP CONN. POS. 2
401	14	GREEN	WEATHER PACK CONN. (POS. D) TO ON-OFF SWITCH INDICATOR LIGHT (+12V)
402	14	BLUE	WEATHER PACK CONN. (POS. E) TO ON-OFF SWITCH INDICATOR LIGHT (GND)
403	14	BROWN	WEATHER PACK CONN. (POS. F) TO 72 HR. TIMER (BR) AMP CON. POS 3
404	16	GREEN/WHITE	MASTER SW., OVERRIDE SW., START SW., GROUND JUMPER CHAIN
405	16	WHITE/BLACK	PILOT LT. RELAY TO DOOR SWITCH RELAY (30)
406	16	ORANGE/WHITE	PILOT LT. RELAY TO DOOR SWITCH RELAY (85)
407	14	BLACK	FOOTWARMER (HIGH)
408	14	WHITE	FOOTWARMER (LOW)
409	16	GREEN/WHITE	MASTER SW., OVERRIDE SW., START SW., GROUND JUMPER CHAIN

CIR	GA	COLOR	DESCRIPTION
410	16	WHITE/BLACK	PILOT LT. RELAY TO DOOR SWITCH RELAY (30)
411	16	ORANGE	PILOT LT. RELAY (COIL) TO DOOR SWITCH RELAY (85)
412	16	RED	MASTER SW. RELAY (86) TO START SW. (3)
413	16	RED	START SW. (3) TO STOP SIGN FLASHER
414	16	RED	STOP SIGN FLASHER TO STOP SIGN SOLENOID
415	16	WHITE	MASTER SW. TO START SW. RELAY (86) RELAY (86)
416	16	GREEN	MASTER SW. RELAY (86) TO START SW. (1)
417	16	GREEN	START SW. (1) TO START SW. RELAY (87a)
418	16	YELLOW	MASTER SW. RELAY (85) TO GND
419	16	YELLOW	START SW. RELAY (85) TO GND
420	16	GREEN	START SW. RELAY (30) TO START SW. TERM. ON FLASHER
421	16	BLUE	START SW. (5) TO GROUND
422	16	RED	START SW. (6) TO DOOR SW. TERM. ON FLASHER
423	16	BLACK	START SW. (2) TO MASTER SW.
424	16	BLACK	MASTER SW. TO MASTER SW. RELAY (87)
425	16	BLACK	MASTER SW. RELAY (30) TO MASTER SW. TERM ON FLASHER
426	14	BLACK	DOOR CONTROLLER (OPEN)
427	14	WHITE	DOOR CONTROLLER (CLOSE)
428	14	BLUE	ELECTRIC DOOR SWITCH FEED
429	14	DARK BLUE	ELECTRIC DOOR SWITCH GROUND
430	16	RED	DOOR AIR PRESS SWITCH TO DOOR RELAY (30)
431	16	WHITE	DOOR RELAY (30) TO DOOR RELAY (85) TO OVERRIDE RELAY (86) TO GROUND
432	16	BLUE	DOOR AIR PRESS. SWITCH TO DOOR RELAY (87)
433	16	BLUE	ACTIVATION SWITCH ("OVERRIDE" SWITCH) TO LATCH RELAY (GROUND SIGNAL)
433A	16	BLUE	LATCH RELAY GROUND SIGNAL TO WARNING LIGHT FLASHER DOOR TERM
434	14	BLACK	ELECTRIC VANDALOCK (FUSE TO KEYSWITCH)
435	14	WHITE	ELECTRIC VANDALOCK (KEYSWITCH TO MOTOR)
436	14	GREEN	ELECTRIC VANDALOCK (FUSE TO MOTOR)
437	16	RED	DOOR SWITCH ON FLASHER TO FAIL-SAFE SW.
438	16	GREEN	FAIL-SAFE SWITCH TO GROUND
439	16	YELLOW	OVERRIDE SWITCH TO OVERRIDE RELAY (87 AND 85) TO DOOR RELAY (86)
440	16	GREEN	OVERRIDE SWITCH TO OVERRIDE RELAY (30)
441	16	GREEN	NC AIR SWITCH TO LATCH RELAY (86) (MANUAL ACTIVATION ("OVERRIDE") SWITCH)
442	16	BLACK	OVERRIDE AIR PRESSURE SWITCH TO +12V (HOT) (MANUAL ACTIVATION SYS. POWER FEED)
443	16	BLUE	STOP SIGN (WALK GATE) TO CONTROLLER OR ACTIVATING SWITCH
444	16	WHITE	STOP SIGN (WALK GATE) TO GROUND
445	16	WHITE/BLACK	3 POSITION SWITCH (1) TO MASTER SWITCH TERMINAL OF FLASHER
446	16	WHITE/BLACK	MASTER SWITCH TERMINAL OF FLASHER TO START SWITCH TERMINAL OF FLASHER
447	16	GREEN	START SWITCH TERMINAL OF FLASHER TO DOOR SWITCH RELAY (87)
448	16	WHITE	RELAY (87) TO CHIME (STOP ARM OVERRIDE)FF
449	16	RED	RADIO ACCESSORY POWER
450	16	BLACK	CHIME RELAY (86) TO CHIME

Thomas BUILT BUSES

52001068 H

CHART - CIRCUITS, ELECTRIC (BODY)

SHEET 3 OF 5

CIR	GA	COLOR	DESCRIPTION
451	16	WHITE	RESET SWITCH TO SWITCH RELAY (86 & 87) TO CHIME RELAY (87)
452	16	RED	RESET SWITCH TO SWITCH RELAY (30) TO CHIME RELAY (30)
453	16	GREEN	RESET SWITCH TO FUSE PANEL (+12 V.)
454	16	GREEN	RESET SWITCH TO CHIME RELAY (85)
455	16	GREEN	RESET SWITCH TO CHIME
456	16	BLUE	SWITCH RELAY (85) TO GROUND
457	16	DARK GREEN	RIGHT COWL MOUNTED TURN SIGNAL
458	16	ORANGE	STARTER INTERRUPT
459	16	ORANGE/BLACK	STARTER INTERRUPT
460	10	RED	FUSE PANEL TO FLASHER MOTOR
461	10	BLUE	FUSE PANEL TO RELAY
462	18	GRAY	RIGHT FRONT SPEAKER (+)
463	16	BLACK	RADIO GROUND
464	18	GRAY/BLACK	RIGHT FRONT SPEAKER (-)
465	18	WHITE	LEFT FRONT SPEAKER (+)
466	18	WHITE/BLACK	LEFT FRONT SPEAKER (-)
467	--	----------	----------
468	16	ORANGE	L.S. HEATED MIRROR
469	16	BLUE	R.S. HEATED MIRROR
470	12	GREEN	PUSHER HEATER GROUND
471	12	GREEN	F.C. HEATER GROUND, DEFROSTER
472	12	GREEN	F.C. HEATER GROUND, STEP
473	12	RED	F.C. HEATER, DEFROSTER, HIGH
474	12	YELLOW	F.C. HEATER, STEP, HIGH
475	14	BROWN	F.C. HEATER, DEFROSTER, LOW
476	14	WHITE	F.C. HEATER, STEP, LOW
477	16	BLACK	HEATER PILOT LIGHT
478	16	GREEN	HEATER PILOT LIGHT GROUND
479	14	RED/BLACK	DEFROSTER HIGH CONTROL
480	14	YELLOW/WHITE	STEP HEAT HIGH CONTROL
481	16	BLACK	PANEL LIGHT JUMPER
482	16	GREEN	PANEL LIGHT GROUND JUMPER
483	8	RED	JUMPER, SOLENOID-TO-HOT FUSE BLOCK
484	2	RED	JUMPER, CHASSIS SOLENOID-TO-TERM. POST
485	4	RED	JUMPER, TERM. POST-TO-SOLENOIDS
486	4	RED	JUMPER, SOLENOID COLD-TO-FUSE BLOCKS
487	16	GREEN/BLACK	INTERMITTENT WIPER/S.C. HEADLIGHT INTERLOCK FEED
488	16	RED/BLACK	INTERMITTENT WIPER/S.C. HEADLIGHT INTERLOCK FEED
489	16	ORANGE/WHITE	ADDITIONAL SIDE DOOR BUZZER GROUND
490	16	RED	REAR STOP SIGN FEED
491	16	GREEN	REAR STOP SIGN SOLENOID
492	16	BLACK	REAR STOP SIGN PILOT LIGHT
493	16	WHITE	REAR STOP SIGN PILOT LIGHT
494	16	BROWN	DOOR LIGHT FEED
495	12	BLACK	WARNING LIGHT MONITOR FEED (RED)
496	12	ORANGE	WARNING LIGHT MONITOR FEED (RED)
497	12	BLUE	WARNING LIGHT MONITOR FEED (AMBER)
498	12	RED	WARNING LIGHT MONITOR FEED (AMBER)
499	12	WHITE	BOOSTER PUMP SWITCH FEED
500	12	WHITE	INTERIOR LIGHT SWITCH FEED

CIR	GA	COLOR	DESCRIPTION
501	16	WHITE	EMERGENCY EXIT PILOT LIGHT GROUND
502	16	YELLOW	BUZZER FEED
503	12	WHITE	MARKER LIGHT SWITCH FEED
504	16	RED	AIR HORN
505	12	WHITE	REAR HEATER SWITCH FEED
506	12	WHITE	REAR HEATER SWITCH FEED
507	16	WHITE	EMERGENCY EXIT PILOT LIGHT FEED
508	16	WHITE	COMPARTMENT LIGHT SWITCH FEED
509	14	RED	WARNING SYSTEM POWER FEED
509A	14	RED	POWER FEED TO FLASHER
509C	14	RED	POWER FEED TO LATCH RELAY (WARN SYS)
510	16	RED/BLACK	OVERRIDE SWITCH TO DOOR SWITCH TERMINAL ON WARNING SYSTEM FLASHER
511	16	RED/GREEN	LATCH RELAY COIL TO DE-LATCH RELAY N.C. TERM
512	16	WHITE	WARNING SYSTEM GROUND
513	16	RED/BLACK	DOOR SWITCH TO DE-LATCH RELAY & DIODE
514	16	GREEN/BLACK	RIGHT COWL MOUNTED WARNING LIGHT
515	16	YELLOW/BLACK	LEFT COWL MOUNTED WARNING LIGHT
516	16	RED	BODE SIDE EXIT DOOR SWITCHES
517	16	WHITE	BODE SIDE EXIT DOOR SWITCHES
518	16	GREEN	BODE SIDE EXIT DOOR SWITCHES
519	16	BLACK	BODE SIDE EXIT DOOR SWITCHES
520	16	WHITE	(SED) STEPWELL LIGHT (STANDARD)
521	16	WHITE/BLUE	(SED)STEPWELL LIGHT(CONT STEPWELL ILLUM)
522	16	ORANGE	MIRAGE LIFT
523	14	RED	DUAL CHIME SYSTEM POWER
524	14	WHITE	DUAL CHIME SYSTEM GROUND
525	16	YELLOW/WHITE	DUAL CHIME SYSTEM DOOR SIGNAL
526	16	RED	DUAL CHIME SYSTEM CHIME SIGNAL(TO TIMER)
527	16	YELLOW/WHITE	DUAL CHIME SYSTEM NON ADA STOP REQ SIG
528	16	YELLOW/BLACK	DUAL CHIME SYSTEM ADA STOP REQ SIG
529	16	BLUE	DUAL CHIME SYSTEM NON-ADA PILOT
530	14	RED	DUAL CHIME SYSTEM ADA PILOT
531	16	RED	DUAL CHIME SYSTEM LIFT DOOR SIGNAL
532	14	ORANGE	READING LIGHT POWER
533	14	BLACK	READING LIGHT GROUND
534	16	WHITE	DOOR INHIBIT GROUND
535	14	RED	DOOR INHIBIT POWER FEED
536	14	RED	T2 AC UNIT (AUTO)
537	14	YELLOW	T2 AC UNIT(COOL)
538	14	ORANGE	T2 AC UNIT(HEAT)
539	14	GREEN/BLACK	T2 AC UNIT (VENT)
540	14	GREEN/WHITE	T2 AC UNIT (FAN SPEED)
541	14	GREEN	T2 AC UNIT (DRIVER'S DEFROST)
542	14	BLUE	T2 AC UNIT(WATER TEMPERATURE)
543	14	BLUE/BLACK	T2 AC UNIT(BOOST PUMP)
544	14	BLUE/WHITE	T2 AC UNIT AC FAILURE LIGHT
545	14	ORANGE/WHITE	T2 AC UNIT COOLANT VALVE
546	16	YELLOW	24 V ALT IGN WIRE
547	12	RED	FUSE PANEL (BATT.) TO SPLICE A
547A	14	RED	SPLICE A TO CONN.2,PIN 2
547B	14	RED	SPLICE A TO CONN.1,PIN A
547C	12	RED	SPLICE A TO SPLICE B
547D	14	RED	SPLICE B TO CONN. 2,PIN 6

CIR	GA	COLOR	DESCRIPTION
547E	12	RED	SPLICE B TO SPLICE C
547F	14	RED	SPLICE C TO CONN. 1,PIN E
547G	14	RED	SPLICE C TO CONN. 1,PIN F
548	14	ORANGE	FUSE PANEL (ACCY) TO CONN. 2,PIN 4
549	12	BROWN	GROUND TO SPLICE D
549A	14	BROWN	SPLICE D TO CONN. 2,PIN 5
549B	12	BROWN	SPLICE D TO SPLICE E TO SPLICE F
549C	14	BROWN	SPLICE E TO CONN. 1,PIN J
549D	14	BROWN	SPLICE F TO CONN. 1,PIN G
549E	14	BROWN	SPLICE F TO CONN. 1,PIN H
550	14	GREEN	CONN. 2 PIN 3 TO CONN.1,PIN C
551	14	BLACK	CONN. 2 PIN 7 TO CONN. 1,PIN B
552	16	WH/BK	PANEL LIGHTS TO CONN. 2,PIN 8
553	14	WHITE(YELLOW)	HEATED MIRROR + 12V (FAN POWER)
554	16	GREEN	HEATED MIRROR GROUND
555	16	BLUE	GROUND SIGNAL TO WARNING SYS FLASHER
556	--	----------	----------
557	--	----------	----------
558	--	----------	----------
559	--	----------	----------
560	--	----------	----------
561	--	----------	----------
562	--	----------	----------
563	--	----------	----------
564	--	----------	----------
565	--	----------	----------
566	--	----------	----------
567	--	----------	----------
568	--	----------	----------
569	--	----------	----------
570	--	----------	----------
571	--	----------	----------
572	--	----------	----------
573	--	----------	----------
574	--	----------	----------
575	18	RED	FROM SP1(-) TO SP3(+)
576	18	ORANGE	FROM SP2(-) TO SP4(+)
577	18	BLUE	FROM SP5(-) TO SP7(+)
578	18	YELLOW	FROM SP6(-) TO SP8(+)
579	2	RED	BRAUN LIFT 12 V BATT POWER
580	12	RED	BRAUN LIFT TBB SOLN COIL PWER (COLD IGN)
581	12	BLACK	BRAUN LIFT TBB SOLN GND
582	--	----------	----------
583	--	----------	----------
584	--	----------	----------
585	--	----------	----------
586	--	----------	----------
587	--	----------	----------
588	--	----------	----------
589	--	----------	----------
590	--	----------	----------
591	--	----------	----------
592	--	----------	----------
593	--	----------	----------
594	--	----------	----------
595	--	----------	----------
596	--	----------	----------
597	--	----------	----------
598	--	----------	----------
599	--	----------	----------

SHEET 4 OF 5

Thomas BUILT BUSES

52001068 H

CHART - CIRCUITS, ELECTRICAL (BODY)

CIR	GA	COLOR	DESCRIPTION
600	--	----------	----------
601	--	----------	----------
602	--	----------	----------
603	--	----------	----------
604	--	----------	----------
605	--	----------	----------
606	--	----------	----------
607	--	----------	----------
608	--	----------	----------
609	--	----------	----------
610	--	----------	----------
611	--	----------	----------
612	--	----------	----------
613	--	----------	----------
614	--	----------	----------
615	--	----------	----------
616	--	----------	----------
617	--	----------	----------
618	--	----------	----------
619	--	----------	----------
620	--	----------	----------
621	--	----------	----------
622	--	----------	----------
623	--	----------	----------
624	--	----------	----------
625	--	----------	----------
626	--	----------	----------
627	--	----------	----------
628	--	----------	----------
629	--	----------	----------
630	--	----------	----------
631	--	----------	----------
632	--	----------	----------
633	--	----------	----------
634	--	----------	----------
635	--	----------	----------
636	--	----------	----------
637	--	----------	----------
638	--	----------	----------
639	--	----------	----------
640	--	----------	----------
641	--	----------	----------
642	--	----------	----------
643	--	----------	----------
644	--	----------	----------
645	--	----------	----------
646	--	----------	----------
647	--	----------	----------
648	--	----------	----------
649	--	----------	----------
650	--	----------	----------
651	--	----------	----------
652	--	----------	----------
653	--	----------	----------
654	--	----------	----------
655	--	----------	----------
656	--	----------	----------
657	--	----------	----------
658	--	----------	----------

CIR	GA	COLOR	DESCRIPTION
659	--	----------	----------
660	--	----------	----------
661	--	----------	----------
662	--	----------	----------
663	--	----------	----------
664	--	----------	----------
665	--	----------	----------
666	--	----------	----------
667	--	----------	----------
668	--	----------	----------
669	--	----------	----------
670	--	----------	----------
671	--	----------	----------
672	--	----------	----------
673	--	----------	----------
674	--	----------	----------
675	--	----------	----------
676	--	----------	----------
677	--	----------	----------
678	--	----------	----------
679	--	----------	----------
680	--	----------	----------
681	--	----------	----------
682	--	----------	----------
683	--	----------	----------
684	--	----------	----------
685	--	----------	----------
686	--	----------	----------
687	--	----------	----------
688	--	----------	----------
689	--	----------	----------
690	--	----------	----------
691	--	----------	----------
692	--	----------	----------
693	--	----------	----------
694	--	----------	----------
695	--	----------	----------
696	--	----------	----------
697	--	----------	----------
698	--	----------	----------
699	--	----------	----------
700	--	----------	----------
701	--	----------	----------
702	--	----------	----------
703	--	----------	----------
704	--	----------	----------
705	--	----------	----------
706	--	----------	----------
707	--	----------	----------
708	--	----------	----------
709	--	----------	----------
710	--	----------	----------
711	--	----------	----------
712	--	----------	----------
713	--	----------	----------
714	--	----------	----------
715	--	----------	----------
716	--	----------	----------
717	--	----------	----------

CIR	GA	COLOR	DESCRIPTION
GND	16	BLACK	COMMON GROUND
SR	14	YELLOW	STOP REQUEST
SP1	16	YELLOW	TIMEDELAY TO FRT & REAR DOOR MOTORS
SP2	16	BLUE	T.B. TO TO DOOR VLV TO W/C
SP3	16	ORANGE	EXTRA WIRE
SP4	16	GREEN	EXTRA WIRE
SP5	16	BLUE	EXTRA WIRE
SP6	16	YELLOW	EXTRA WIRE
SP7	16	BLACK	EXTRA WIRE
010A	16	WHITE	SIDE EXIT DOOR
2101	16	RED/WHITE	SIDE EXIT DOOR
6009	16	GREEN	SIDE EXIT DOOR
6010	16	BLUE	SIDE EXIT DOOR
9141	16	BLACK	SIDE EXIT DOOR
9143	16	ORANGE	SIDE EXIT DOOR
9145	16	GREEN	SIDE EXIT DOOR
9146	16	ORANGE	SIDE EXIT DOOR
9147	16	GREEN	SIDE EXIT DOOR
9150	16	YELLOW	FRONT DOOR ALARM
9201	16	ORANGE	SPEAKER (-) (CURB SIDE FRONT)
9202	16	BLUE	SPEAKER (+) (CURB SIDE FRONT)
9203	16	YELLOW	SPEAKER (-) (STREET SIDE FRONT)
9204	16	GREEN	SPEAKER (+) (STREET SIDE FRONT)
9205	16	YELLOW	SPEAKER JUMPER (CURB SIDE FRONT)
9206	16	GREEN	SPEAKER JUMPER (CURB SIDE REAR)
9207	16	ORANGE	SPEAKER JUMPER (STREET SIDE FRONT)
9208	16	BLUE	SPEAKER JUMPER (STREET SIDE REAR)
9211	16	ORANGE	SPEAKER (-) (CURB SIDE REAR)
9212	16	BLUE	SPEAKER (+) (CURB SIDE REAR)
9213	16	YELLOW	SPEAKER (-) (STREET SIDE REAR)
9214	16	GREEN	SPEAKER (+) (STREET SIDE REAR)
---	--	----------	----------
---	--	----------	----------
---	--	----------	----------

CIRC #	AWG	COLOR	CIRCUIT DESCRIPTION
1	10	VIOLET	IGNITION SW. (BAT) TO REAR IGN. TOGGLE SWITCH
2	10	VIOLET/WHITE	IGNITION SW (IGN) TO IGN. POWER RELAY (IGN)
3	16	RED	CIRCUIT BREAKER #8 TO FUEL GAGE (I)
4	14	VIOLET/WHITE	IGNITION SWITCH (ST) TO NEUTRAL SWITCH
5	2	RED	CIRCUIT BREAKER #1 (LOAD) TO HOT BUSS BAR
6	16	LT. GREEN/BLACK	FUEL GAGE (S) TO FUEL SENDER
7	16	RED/WHITE	FUEL GAGE (I) TO SPEEDOMETER (+)
8	16	RED/WHITE	SPEEDOMETER (+) TO VOLTMETER (I)
9	14	RED	SPARE LEAD (DASH PANEL TO ENGINE)
10	16	WHITE/BLACK	SPEEDOMETER (-) TO VOLTMETER GROUND
11	16	WHITE	SPEEDOMETER (-) TO LEFT FRONT WHEEL (GND)
12	16	LT. GREEN	SPEEDOMETER (TACH. INPUT) TO LEFT FRONT WHEEL (SPEED)
13	16	RED/BLACK	VOLTMETER (I) TO WARNING BUZZER
14	16	RED/BLACK	VOLTMETER (I) TO OIL PRESSURE GAGE (I)
15	16	WHITE/BLACK	VOLTMETER GROUND TO GROUND LUG ON DASH
16	10	WHITE	GROUND LUG ON DASH TO GROUND ON FRAME
17	16	WHITE/BLACK	LOW AIR SWITCHES (GROUND) TO GROUND LUG ON DASH
18	16	WHITE	GROUND LUG ON DASH TO TACHOMETER (-)
19	14	YELLOW	SPARE LEAD (DASH PANEL TO ENGINE)
20	16	LT. GREEN/WHITE	TACHOMETER (+) TO ALTERNATOR
21	16	LT. GREEN/BLACK	OIL PRESSURE GAGE (S.) TO OIL PRESSURE SENDER
22	16	RED/WHITE	OIL PRESSURE GAGE (I) TO WATER TEMP. GAGE (I)
23	16	RED/WHITE	OIL PRESSURE GAGE (I) TO WARNING LIGHT (POWER)
24	16	LT. GREEN	WATER TEMP. GAGE (I) TO WATER TEMP. SENDER
25	16	RED/BLACK	WATER TEMP. GAGE (I) TO EXHAUST BRAKE DASH SW.
26	16	GRAY	LOW AIR SWITCHES TO WARNING BUZZER
27	16	GRAY/BLACK	LOW AIR SWITCHES TO WARNING LIGHT
28	16	GRAY/WHITE	LOW AIR SWITCH TO LOW AIR SWITCH (GROUND JUMPER)
29	16	GRAY	LOW AIR SWITCH TO LOW AIR SWITCH (HOT JUMPER)
30	16	PINK	WARNING LIGHT TO LOW OIL PRESSURE SWITCH
31	10	RED/BLACK	CIRCUIT BREAKER #4 TO HEADLIGHT SWITCH (BAT.)
32	14	YELLOW/BLACK	HEADLIGHT SWITCH (H) TO TURN SIGNAL SWITCH
33	14	BROWN	HEADLIGHT SWITCH (P) TO PK. LT. SERVICE TERM.
34	14	BROWN/WHITE	HEADLIGHT SWITCH (T) TO TAIL LIGHT SERVICE TERM.
35	14	LT. BLUE	HEADLIGHT SWITCH (D) TO DASH LIGHT SERVICE TERM.
36	16	LT. BLUE/WHITE	HEADLIGHT SWITCH (D) TO DASH LIGHT JUNCTION #1
37	16	LT. BLUE/BLACK	DASH LIGHT JUNCTION #1 TO DASH LIGHT JUNCTION #2
38	14	DK. BLUE	EXHAUST BRAKE DASH SW. TO MICROSWITCH OR JAKE BRAKE DASH SW TO THROTTLE MICROSWITCH
39	16	PINK/BLACK	HI-BEAM INDICATOR LIGHT TO DIMMER SWITCH
40	16	PINK	LEFT TURN INDICATOR LIGHT TO TURN SIGNAL SWITCH
41	16	PINK/WHITE	RIGHT TURN INDICATOR LIGHT TO TURN SIGNAL SWITCH
42	14	ORANGE	TURN SIGNAL SW. TO LEFT SIGNAL SERVICE TERM.
43	14	ORANGE/BLACK	TURN SIGNAL SW. TO RIGHT SIGNAL SERVICE TERM.
44	14	ORANGE/WHITE	TURN SIGNAL SW. TO TURN SIGNAL FLASHER
45	14	PINK/WHITE	HORN BUTTON LEAD TO HORN RELAYS (S)
46	14	YELLOW	HAZARD LIGHT SW. (YELLOW) TO HAZARD LT FLASHER
47	16	RED/WHITE	WATER TEMP. GAGE (I) TO TRANSMISSION TEMP. GAGE (I)
48	14	RED/BLACK	CIRCUIT BREAKER #7 TO HORN RELAY (CENTER LUG)
49	14	PINK/WHITE	HORN RELAY (H) TO RIGHT HORN
50	14	PINK/BLACK	HORN RELAY (H) TO LEFT HORN
51	14	YELLOW/WHITE	HEADLIGHT RELAY TO HI-BEAM
52	14	YELLOW/BLACK	HEADLIGHT RELAY TO LO-BEAM
53	14	RED/BLACK	CIRCUIT BREAKER #8 TO TURN SIGNAL FLASHER
54	14	RED/BLACK	CIRCUIT BREAKER #6 TO HAZARD LIGHT FLASHER
55	16	LT. GREEN	TRANSMISSION TEMP. GAGE (S) TO TRANSMISSION TEMP. SENDER
56	14	BLACK JUMPER	DIODE 6220078! TO HEADLIGHT RELAY NO. 30 (OPTIONAL)
57	14	RED	CIRCUIT BREAKER # 14 TO "BATT." LIGHT RELAY
58	14	YELLOW	
59	14	RED/BLACK	CIRCUIT BREAKER #5 TO FRONT STOPLIGHT SW. (POWER)
60	14	ORANGE/WHITE	FRONT STOPLIGHT SWITCH TO STOPLIGHT SERVICE TERMINAL
61	14	ORANGE	FRONT STOPLIGHT SW. TO REAR STOPLIGHT SW. (HOT JUMPER)
62	14	ORANGE/BLACK	FRONT STOPLIGHT SW. TO REAR STOPLIGHT SW. (SERVICE JUMPER)
63	16	LT. BLUE	DASH LIGHT SERVICE TERMINAL TO SHIFT TOWER LIGHT
64	16	WHITE/BLACK	REVERSE PILOT LIGHT TO GROUND ON FRAME
65	14	VIOLET/WHITE	REAR START BUTTON TO NEUTRAL SWITCH
66	14	VIOLET	NEUTRAL SW. TO REAR DOOR STARTER INTERLOCK SW.
67	14	RED/BLACK	CIRCUIT BREAKER #9 TO REVERSE SWITCH
68	14	BLACK	REVERSE SWITCH TO BACK UP LIGHT SERVICE TERMINAL
69	10	RED	IGN. POWER RELAY (LOAD) TO CIRC. BREAKER #2 (BAT)
70	4	RED/WHITE	IGN. POWER RELAY (BAT) TO HOT BUSS BAR
71	4	RED/BLACK	IGN. POWER RELAY (LOAD) TO COLD BUSS BAR
72	14	VIOLET/WHITE	FUEL RELAY (87) TO FUEL SOLENOID
73	16	RED	ENGINE COMPARTMENT LT. SW. TO ENGINE COMP. LIGHTS
74	16	PINK/WHITE	HIGH WATER TEMP. SW. TO LOW OIL PRESSURE SWITCH
75	4	RED	ALTERNATOR OUTPUT TO CIRC. BREAKER #1 (BAT)
76	2	RED/WHITE	STARTER SOLENOID (BAT.) TO CIRCUIT BREAKER #1 (BAT.)
77	10	RED/WHITE	CIRCUIT BREAKER #1 (LOAD) TO STARTER RELAY (BAT)
78	10	RED/BLACK	STARTER RELAY (LOAD) TO STARTER SOLENOID SWITCH
79	14	DK. BLUE/WHITE	CIRCUIT BREAKER #2 TO "IGN" ON BLOWER DRIVEN ALTERNATOR
81	10	GRAY/BLACK	HEATED DRAIN TANK HOT JUMPER
82	14	RED/WHITE	CIRCUIT BREAKER #2 (LOAD) TO REAR START BUTTON
83	10	RED/WHITE	CIRC. BREAKER #1 (LOAD) TO CIRCUIT BREAKER #3 (BAT.)
84	10	RED/BLACK	CIRC. BREAKER #3 (LOAD) TO REAR IGN. TOGGLE SWITCH
85	10	GRAY	CIRC. BREAKER #12 (LOAD) TO HEATED AIR TANK DRAIN
86	2	RED/BLACK	MASTER SWITCH TO CIRCUIT BREAKER #1
87	16	DK. BLUE/WHITE	NEUTRAL SWITCH TO FAST IDLE DASH SWITCH
88	16	DK. BLUE/WHITE	FAST IDLE DASH SWITCH TO FAST IDLE SOLENOID
89	14	RED/BLACK	CIRCUIT BREAKER #2 (LOAD) TO KYSOR ALARMSTAT (c)
90	14	DK. GREEN/WHITE	KYSOR PRESSURESTAT (c) TO KYSOR ALARMSTAT (NC)
91	14	DK. GREEN	KYSOR PRESSURESTAT (NO) TO KYSOR MODULE (3)
92	14	DK. GREEN/WHITE	KYSOR PRESSURESTAT (NC) TO KYSOR ALARMSTAT (NO)
93	14	DK. GREEN/WHITE	KYSOR ALARMSTAT (NO) TO KYSOR BELL (POWER)
94	14	DK. GREEN	KYSOR BELL (POWER) TO KYSOR LIGHT (POWER)
95	14	DK. GREEN	KYSOR LIGHT (GROUND) TO KYSOR BELL (GROUND)
96	14	DK. GREEN/BLACK	KYSOR BELL (GROUND) TO KYSOR MODULE (4)
97	14	DK. GREEN/BLACK	KYSOR MODULE (4) TO GROUND IN FRONT PANEL
98	14	DK. GREEN/WHITE	KYSOR MODULE (2) TO FRONT PANEL (CIRC. #4)

CIRC #	AWG	COLOR	CIRCUIT DESCRIPTION
99	14	RED	CIRC. BREAKER #10 TO KYSOR MODULE FUSE
100	14	GRAY	CIRC. BREAKER #13 (LOAD) TO AIR DRYER
101	14	DK. BLUE	EXHAUST BRAKE MICROSWITCH TO BRAKE SOLENOID
103	14	DK. BLUE/BLACK	CIRCUIT BREAKER #11 TO ETHER START SWITCH
104	14	DK. BLUE/WHITE	ETHER START SWITCH TO ETHER VALVE SOLENOID
105	14	DK. BLUE/WHITE	ETHER VALVE SOLENOID TO OVERRIDE THERMOSTAT
106	14	WHITE/BLACK	OVERRIDE THERMOSTAT TO GROUND ON ALTERNATOR (NEG)
107	14	BLACK/WHITE	REVERSE SWITCH TO BACK-UP ALARM (+)
108	14	WHITE/BLACK	BACK ALARM (-) TO GROUND
109	16	RED	CIRC. BREAKER #2 TO REAR PANEL GAUGES (HOT)
110	14	LT. GREEN/BLACK	ENG. COMP. OIL PRESSURE GAGE TO ADDED SENDER
111	10	RED/WHITE	CIRC. BREAKER #2 TO CIRC. BREAKER #13 (HOT JUMPER)
112	14	VIOLET/WHITE	REAR DOOR STARTER INTERLOCK SW. TO STARTER RELAY
113	16	WHITE/BLACK	FAST IDLE INDICATOR LIGHT TO GND. AT BUZZER
115	14	PINK/WHITE	IGN. SWITCH (ACCC) TO SERVICE TERM. #10
116	14	LT. GREEN/WHITE	CIRC. BREAKER #5 TO ENG. COMP. LIGHT SW.
117	16	WHITE/BLACK	FAST IDLE SOLENOID TO GROUND ON DASH
118	14	DK. GREEN	CIRC. BREAKER #11 TO KYSOR COOLANT LEVEL MODULE (1)
119	14	WHITE	GROUND IN FRONT PANEL TO COOLANT MODULE (4)
120	14	DK. GREEN/WHITE	COOLANT PROBE TO COOLANT MODULE (2)
121	14	VIOLET/WHITE	STARTER RELAY (LOAD) TO FUEL START SOLENOID (CATERPILLAR TURBO ONLY)
122	14	DK. BLUE	JAKE BRAKE DASH SW. (#1) TO LEFT CYLINDER BANK
123	14	DK. BLUE/WHITE	JAKE BRAKE DASH SW. (#2) TO RIGHT CYLINDER BANK
124	14	DK. BLUE	CIRC. BREAKER #13 TO JAKE BRAKE TRANS. PRESSURE SW.
125	14	DK. BLUE/BLACK	JAKE BRAKE TRAN. SW. TO THROTTLE MICROSWITCH
126	10	VIOLET/WHITE	MASTER CONTROL SWITCH (1) TO IGN. SW. (B)
127	14	BROWN/WHITE	MASTER CONTROL SWITCH (2) TO PARK & TAIL LIGHT RELAY (COIL)
128	14	YELLOW/BLACK	MASTER CONTROL SWITCH (3) TO HEADLIGHT RELAY (COIL)
129	10	YELLOW	HEADLIGHT RELAY TO PK. & TAIL LT. RELAY (HOT JUMPER)
130	14	WHITE	HEADLIGHT GROUND TO FRAME GROUND
131	14	RED	CIRC. BREAKER NO. 13 TO REVERSE SWITCH AT TRANSMISSION
132	16	LT. GREEN	AMMETER SHUNT TO FRONT DASH AMMETER (+)
133	16	LT. GREEN/WHITE	AMMETER SHUNT TO FRONT DASH AMMETER (-)
134	16	LT. GREEN	AMMETER SHUNT TO REAR DASH AMMETER (+)
135	16	LT. GREEN/BLACK	AMMETER SHUNT TO REAR DASH AMMETER (-)
136	16	RED/BLACK	WATER TEMP. GAGE (I) TO TACHOMETER
137	16	RED/WHITE	WATER TEMP. GAGE (I) TO TEMP. & PRESSURE WARNING LIGHT
138	16	PINK	TEMP. & PRESSURE WARNING LIGHT TO WARNING BUZZER
139	14	RED	CIRC. BREAKER NO. 1 (LOAD) TO CIRC. BREAKER NO. 15 (BATT.)
140	14	RED/WHITE	CIRC. BREAKER NO. 15 (LOAD) TO FUEL HEATER RELAY NO. 30
141	14	RED	FUEL HEATER RELAY (NO. 87) TO FUEL HEATER
142	14	WHITE	FUEL HEATER RELAY (NO. 86) TO FUEL HEATER.
143	16	RED	FUEL HEATER RELAY (NO. 85) TO CIRCUIT BREAKER #13
144	14	WHITE	FUEL HEATER RELAY (NO. 86) TO GND. AT ELEC. PANEL LOWER ANGLE
145	16	WHITE	FUEL GAGE SENDER MTG. SCREW TO FRAME GROUND
146	16	RED	KYSOR LOW COOLANT MODULE (1) TO WARNING LIGHTS
147	16	DK. GREEN/WHITE	KYSOR LOW COOLANT MODULE (3) TO WARNING LIGHTS
148	16	LT. BLUE/BLACK	TAIL/MARKER LT. JUNCTION TO FRONT STEP LIGHT
149	14	YELLOW/WHITE	DIMMER SW. (32) TO HD.LT. RELAY TERMINAL NO. 30
150	14	RED/WHITE	CIRC. BREAKER NO. 4 TO VISUAL HORN FEED
151	14	RED/BLACK	CIRC. BREAKER NO. 4 TO VISUAL HORN RELAY TERM. #30
152	14	YELLOW/BLACK	TURN SIGNAL SW. TO HD. LT. RELAY COIL
153	14	YELLOW/BLACK	HD. LT. RELAY COIL TO VISUAL HORN RELAY COIL
154	14	YELLOW/WHITE	HD. LT. RELAY (N.O.) TO VISUAL HORN RELAY (N.O.)
155	14	ORANGE/BLACK	DROP FOR HAZARD SWITCH
156	14	ORANGE	DROP FOR HAZARD SWITCH
157	14	WHITE	VISUAL HORN RELAY TO HD. LT. RELAY TERM. #86
158	14	WHITE	HD. LT. RELAY TO GROUND STUD
159	16	BLACK/WHITE	REVERSE PILOT LIGHT FEED
160	14	RED/WHITE	CIRCUIT BREAKER #13 TO FUEL RELAY (30)
161	14	DK. BLUE/WHITE	FUEL RELAY COIL (85) TO SERVICE TERMINAL #91
162	14	RED/WHITE	CIRCUIT BREAKER #16 TO RETARDER POWER SWITCH
163	14	RED/BLACK	CIRCUIT BREAKER #16 TO RETARDER ON SWITCH
164	14	RED	CIRCUIT BREAKER #16 TO RETARDER OVERHEAT PILOT LT.
165	14	DK. BLUE	RETARDER ON SWITCH TO RETARDER ON PILOT LIGHT
166	14	DK. BLUE/WHITE	RETARDER POWER SWITCH TO ACCELERATOR INTERLOCK
167	14	DK. BLUE/BLACK	RETARDER OVERHEAT PILOT LIGHT TO TRANSMISSION SENSOR
168	14	WHITE/BLACK	RETARDER POWER SWITCH TO DASH GROUND
169	14	WHITE	RETARDER ON PILOT LIGHT TO DASH GROUND
170	3/0	BLACK	BATTERY (NEG) TO STARTER
171	2	BLACK	STARTER TO CIRCUIT BREAKER #17
172	16	BLACK/WHITE	ALTERNATOR FIELD CIRCUIT
173	16	BLACK/WHIE	ALTERNATOR FIELD CIRCUIT
174	14	BLACK	CIRC. BKR. #16 TO BRAKE & AIR ACCELERATOR INTERLOCK SW.
175	10	VIOLET/WHITE	FUEL SOLENOID TO GROUND
176	14	VIOLET/WHITE	FUEL SOLENOID RELAY WITH KYSOR SHUTDOWN
177	14	WHITE	AIR INTAKE HEATER CONTROLLER PILOT LT TO CIRC. #19
178	16	BLUE	AIR INTAKE HEATER CONTROLLER TO CIRCUIT BKR. #2
179	8	BLUE	AIR INTAKE HEATER TO 150 AMP BREAKER
180	8	BLUE/WHITE	AIR INTAKE HEATER TO ALTERNATOR GROUND
181	14	WHITE	BODY BLOCK HEATER RECEPTICAL TO TANK TYPE BLOCK HT.
182	14	GREEN	BODY BLOCK HEATER RECEPTICAL TO GROUND
183	14	BLACK	BODY BLOCK HEATER RECEPTICAL TO TANK TYPE BLOCK HTR.
184	14	WHITE	TRANSMISSION SENSOR TO GND ON TRNS. FILTER BRACKET.
185	16	PINK	AIR DUMP SWITCH TO PILOT LIGHT (4" JUMPER)
186	16	LT. GREEN/BLACK	SPEEDOMETER TO (SIGNAL) SENDING UNIT
187	16	LT. GREEN/WHITE	SPEEDOMETER TO (SIGNAL GROUND) SENDING UNIT
188	16	GREEN	GAUGES TO REAR PANEL GROUND
189	16	BROWN/BLACK	FAN RELAY (87) TO FAN SOLENOID
190	16	BROWN/WHITE	FAN RELAY (85) TO FAN TEMP. SENSOR
191	14	VIOLET/BLACK	FUEL SHUTDOWN SOLENOID TO GROUND ON REAR PNL.
192	10	VIOLET/WHITE	STARTER RELAY TO FUEL SHUTDOWN SOLENOID
193	14	VIOLET	FUEL SHUTDOWN SOLENOID TO FUEL RELAY (87)
194	10	WHITE	ALTERNATOR GND. TO GROUND STUD ON REAR PANEL
195	16	LT. GREEN/WHITE	REAR WATER TEMP. GAUGE TO WATER TEMP. SENSOR
196	14	DK. BLUE/WHITE	RETARDER ON SWITCH TO RETARDER STOP LIGHT SW.
197	14	DK. BLUE	RETARDER STOP LIGHT SWITCH TO BRAKE LT. SW. (62)

CIRC #	AWG	COLOR	CIRCUIT DESCRIPTION
198	16	RED	COLD IGNITION TO FREQUENCY CONVERTER
199	14	WHITE	BRAKE RETARDER TO FOOT TREADLE
200	14	BLACK	BRAKE RETARDER TO FOOT TREADLE
201	14	YELLOW/BLACK	HEADLIGHT DIODE TO HEADLIGHT RELAY
202	14	ORANGE	DIMMER SWITCH TO TURN SIGNAL CONNECTOR (PIN 7)
203	14	ORANGE/WHITE	TURN SIGNAL CONNECTOR (PIN 8) TO DIMMER SWITCH
204	14	PINK\BLACK	HORN RELAY TO TURN SIGNAL CONNECTOR (PIN 6)
205	16	RED	COLD IGNITION TO PARK BRAKE CONTROL PRESSURE STAT. SW.
206	16	LT. GREEN/WHITE	PARK BRAKE CONTROL PRESSURE STAT SW. TO LOWER DASH PILOT LT.
207	10	RED	MISCELLANEOUS WIRING
208	14	RED	MISCELLANEOUS WIRING
209	14	BLACK	MISCELLANEOUS WIRING
210	16	GREEN/BLACK	RIGHT TURN INDICATIOR LIGHT TO RIGHT REAR LAMP
211	16	GREEN/WHITE	LEFT TURN INDICATOR LIGHT TO LEFT REAR LAMP
212	16	YELLOW	TRANS. MODULATOR RELAY TO SKINNER SOLENOID
213	16	RED	TRANS. MODULATOR TO CIRCUIT BREAKER #13
214	14	YELLOW/BLACK	HEADLIGHT HAZARD FLASHER INPUT TERMINAL
215	16	BLUE	CIRCUIT BREAKER #13 TO FAN RELAY (30)
216	16	WHITE	FAN RELAY (86) TO FAN RELAY (30)
217	16	WHITE	FUEL RELAY (86) TO GROUND ON REAR PANEL
218	16	BROWN	CONNECTOR 5, PIN 12 TO DOOR RELAY
219	16	YELLOW	CONNECTOR 5, PIN 5 TO LIFT PILOT LIGHT
220	16	GREEN	CONNECTOR 5, PIN 9 TO SERVICE TERMINAL 220
221	16	ORANGE	CONNECTOR 5, PIN 10 TO LOW ALTERNATOR LAMP
222	14	WHITE	CONNECTOR 5, PIN 13 TO GROUND AT DASH
223	16	BLUE	VOLTMETER GROUND TO VOLTMETER GAUGE (S)
224	14	ORANGE	WATER TEMP. GAUGE GROUND TO ENGINE OIL PRESSURE GAUGE GROUND TO VOLTMETER GROUND
225	14	BROWN	TACHOMETER GROUND TO SPEEDOMETER GROUND
226	14	BLACK	FUEL GAUGE GROUND TO TRANSMISSION OIL TEMPERATURE GAUGE GROUND TO SPEEDOMETER GROUND
227	16	YELLOW	SPEEDOMETER LIGHT TO #37 JUNCTION
228	16	ORANGE	TACHOMETER LIGHT TO #36 JUNCTION
229	10	GREEN	VOLTMETER GROUND TO TERMINAL BOARD #1 (TB1)
230	8	RED	BATTERY (+) TO BUSS BAR (+)
231	8	GREEN	BATTERY (-) TO BUSS BAR (-)
232	14	ORANGE	TB4 TO TB7, CPC CONNECTOR PANEL (JUMPER)
233	14	WHITE	TB2 TO TB1, CPC CONNECTOR PANEL (JUMPER)
234	14	BLUE	TB6 TO TB2, CPC CONNECTOR PANEL (JUMPER)
235	14	RED	TB5 TO TB6, CPC CONNECTOR PANEL (JUMPER)
236	14	BLACK/WHITE	REAR PANEL ENG. OIL PRESS GA. GND TO TERM. BD #1 (POS. B)
237	14	RED	IGN. HOT POWER STUD NO. 3 TO CIRCUIT BREAKER NO. 2 (BATT.)
238	14	GREEN/WHITE	FUEL SOLENOID RELAY GND. (86) TO TERM. BD NO. 1 (POS. B)
239	14	YELLOW/WHITE	FUEL/WATER SEP. RELAY GND (86) TO TERM. BD NO. 1 (POS. B)
240	14	ORANGE/WHITE	AIR INLET HEATER RELAY GND (86) TO TERM. BD NO. 1 (POS B)
241	14	BLACK	AIR INLET HEATER RELAY (85) TO CIRCUIT BREAKER NO. 2 (LOAD)
242	14	RED/WHITE	AIR INLET HEATER RELAY (30) TO CIRCUIT BREAKER NO. 15 (LOAD)
243	14	WHITE	TERM. BD #3 (POS. B) GND TO REAR PANEL GND, STUD
244	14	BLACK/WHITE	TERM. BD #1 (POS. B) GND TO REAR PANEL GND, STUD
245	16	BLACK	INLET AIR HEATER RELAY (87) TO INLET AIR HEATER OIL PRESS. SW
246	16	RED	STARTER RELAY (LOAD) TO INLET AIR HEATER CONTROL MODULE (B)
247	16	BLUE	INLET AIR HEATER CONTROL MODULE (A) TO TERM BD. NO. 3 (POS. B)
248	2	RED	INLET AIR HEATER 105 AMP CB TO INLET AIR HEATER CONTACTOR (LOAD)
249	16	ORANGE	INLET AIR HEATER WATER TEMP SW TO INLET AIR HEATER CONTROL MODULE (E)
250	16	YELLOW	INLET AIR HEATER CONTACTOR TO INLET AIR HEATER CONTROL MODULE (D)
251	16	GREEN	INLET AIR HEATER CONTROL RELAY (87) TO INLET AIR HEATER CONTACTOR (COIL)
252	16	BLACK	INLET AIR HEATER CONTROL RELAY (87) TO INLET AIR HEATER CONTROL MODULE (F)
253	16	WHITE	INLET AIR HEATER WATER TEMP SW TO GND STD IN REAR PANEL
254	16	GREEN	INLET AIR HEATER OIL PRESS SW TO INLET AIR HEATER CONTROL MODULE (C)
255	14	WHITE	FUEL SOLENOID GND TO GND STUD IN REAR PANEL
256	2	RED	AMP SHUNTOR HOT POWER STUD #1 TO 105 AMP CB AIR INLET HEATER
257	14	WHITE	FAN SOLENOID TO FRAME GND (JUMPER)
258	14	BROWN/WHITE	CIRCUIT BREAKER #11 TO DRL TAILLIGHT RELAY CONTACT TERM. 87A
259	14	YELLOW	CIRCUIT BREAKER #11 TO DRL HEADLIGHT DIODE
260	14	YELLOW/WHITE	DRL HEADLIGHT DIODE TO DRL HEADLIGHT RELAY CONTACT TERM. 30
261	14	YELLOW/BLACK	DRL HEADLIGHT RELAY CONTACT TERM. 30 TO HEADLIGHT RELAY CONTACT TERM. 30
262	14	BROWN	DRL TAILLIGHT RELAY CONTACT TERM. 30 TO TAILLIGHT SERVICE TERM.
263	14	BROWN	CIRCUIT BREAKER #11 TO DRL PARK LIGHT RELAY CONTACT TERM. 87A
264	14	BROWN/WHITE	DRL PARK LIGHT RELAY CONTACT TERM. 30 TO PARK LIGHT SERVICE TERM.
265	14	BROWN	HEADLIGHT SW (T) TO DRL TAILLIGHT RELAY COIL TERM. 85
266	14	BROWN/WHITE	HEADLIGHT SW (P) TO DRL PARK LIGHT RELAY COIL TERM. 85
267	14	YELLOW	HEADLIGHT SW. (H) TO DRL HEADLIGHT RELAY COIL TERM. 85

NOTES:

1.) WIRING COLORS-FIRST COLOR INDICATES BASE COLOR OF WIRE.
ONE DIAGONAL SLASH INDICATES ONE TRACER STRIPE, TWO DIAGONAL SLASH MARKS INDICATE TWO TRACER STRIPES USED.

2.) COLOR CODES ARE DIVIDED INTO GROUPS AS FOLLOWS:
RED-GENERATOR & MAIN FEED CIRCUITS
VIOLET-ENGINE CONTROL CIRCUITS
DK BLUE-ENGINE ACCESSORY CIRCUITS
YELLOW-HEADLIGHT CIRCUITS
BROWN-CLEARANCE IDENTIFICATION MARKER & TAIL LIGHTS CIRCUIT
LIGHT BLUE-INTERIOR LIGHTING CIRCUITS
ORANGE-TURN SIGNAL, HAZARD & STOP LIGHTS CIRCUITS
LIGHT GREEN-INSTRUMENT CIRCUITS
GRAY-BRAKE SYSTEMS CIRCUIT
BLACK-BACK UP LIGHTS
PINK-DRIVE AID CIRCUITS
DK GREEN-KYSOR PROTECTION CIRCUITS
WHITE-GROUND CIRCUITS

SHEET 1 OF 3

Thomas BUILT BUSES

62201002 L

CHART - ELECTRICAL CIRCUITS w/COLOR CODES, 1990 (CHASSIS)

CIRC #	AWG	COLOR	CIRCUIT DESCRIPTION
268	14	YELLOW	HEADLIGHT SOLENOID (COIL) TO DRL HEADLIGHT RELAY COIL TERM. 85
269	14	BROWN/WHITE	PARK AND TAIL LIGHT SOLENOID (COIL) TO DRL PARK LIGHT RELAY COIL TERM. 85
270	14	BROWN	PARK AND TAIL LIGHT SOLENOID (COIL) TO DRL TAIL LIGHT RELAY COIL TERM. 85
271	14	RED	CIRCUIT BREAKER #13 TO ALTERNATOR OIL PRESS/EXT EXCITER RELAY TERM. 85 & 30
272	2/0	RED	ALTERNATOR OUTPUT POSITIVE (B+) TO 150 AMP CHASSIS CIRCUIT BREAKER
273	4/0	BLACK	STARTER NEGATIVE POST TO FRAME GND
274	4/0	BLACK	ALTERNATOR NEGATIVE POST TO STARTER NEGATIVE POST
275	4/0	RED	ALTERNATOR OUTPUT POSITIVE (B+) TO STARTER POSITIVE POST
276	14	RED	CIRCUIT BREAKER #11 TO W/S WIPER/HEADLIGHT INTERLOCK RELAY TERM. 87
277	14	RED/BLACK	CIRCUIT BREAKER #11 TO W/S WIPER/PARK LIGHT INTERLOCK RELAY TERM. 87
278	14	RED/WHITE	CIRCUIT BREAKER #11 TO W/S WIPER/TAIL LIGHT INTERLOCK RELAY TERM. 87
279	14	RED	CIRCUIT BREAKER #11 TO W/S WIPER/LIGHTING CONTROL RELAY TERM. 30
280	14	YELLOW	W/S WIPER/HEADLIGHT INTERLOCK RELAY TERM. 30 TO ANTI-FEEDBACK DIODE
281	14	BROWN	W/S WIPER/PARK LIGHT INTERLOCK RELAY TERM. 30 TO PARK LIGHT SERVICE TERM.
282	14	BROWN/BLACK	W/S WIPER/TAIL LIGHT INTERLOCK RELAY TERM 30 TO TAIL LIGHT SERVICE TERM.
283	14	ORANGE	W/S WIPER/LIGHTING CONTROL RELAY TERM. 87 TO HEADLIGHT, TAIL, PARK INTERLOCK RELAY TERM. 85
284	14	BLACK	W/S WIPER/LIGHTING CONTROL RELAY TERM. 85 TO W/S WIPER SW. DIODES
285	14	RED	W/S WIPER SW DIODE TO W/S WIPER SW LEFT MOTOR (HIGH)
286	14	RED/WHITE	W/S WIPER SW DIODE TO W/S WIPER SW LEFT MOTOR (LOW)
287	12	RED	WEATHER PACK CONNECTOR (POS. B) BAT. +12V TO MAIN CIRCUIT BREAKER (150 AMP) NO. 1. (LOAD)
288	12	BROWN	WEATHER PACK CONNECTOR (POS. A) BAT. GND TO REAR ELECT. PANEL GND STD.
289	14	RED	WEATHER PACK CONNECTOR (POS. A) TO 72 HR TIMER (RED) & (RED) TO ON-OFF SW
290	14	BLACK	WEATHER PACK CONNECTOR (POS. B) TO ON-OFF SW
291	14	YELLOW	WEATHER PACK CONNECTOR (POS. C) TO 72 HR TIMER (YELLOW)
292	14	GREEN	WEATHER PACK CONNECTOR (POS. D) TO ON-OFF SW INDICATOR LIGHT (+12V)
293	14	BLUE	WEATHER PACK CONNECTOR (POS. E) TO ON-OFF SW INDICATOR LIGHT (GND)
294	14	BROWN	WEATHER PACK CONNECTOR (POS. F) TO 72 HR TIMER (BROWN)
295	14	RED	CHASSIS ELECT SIDE PANEL CONNECTION TO PALL FILTER PRESS. SW. B (RED)
296	14	WHITE	CHASSIS ELECT SIDE PANEL CONNECTION TO PALL FILTER PRESS. SW. A (WHITE)
297	14	BLACK	CHASSIS ELECT SIDE PANEL GND. STUD TO PALL FILTER PRESS. SW. C (BLACK)
298	14	RED/WHITE	CHASSIS ELECT SIDE PANEL CIRCUIT BREAKER NO. 7 TO PALL LED DASH SW. RESISTOR
299	14	BLACK	FEMALE CONNECTOR #4 (61200632) POS. 5 TO MASTER CONTROL SW. (G)
300	14	BLACK	FEMALE CONNECTOR #4 (61200628) POS. 5 TO CHASSIS SIDE PANEL TB #3, POS.1
301	2	RED	INLET AIR HEATER CONTACTOR (LOAD) TO INLET AIR HEATER ELEMENT
302	14	BLACK/WHITE	INLET AIR HEATER CONTROL RELAY TERM. 87 TO TERM. BD. 2 (POS.7)
303	16	BLACK	WIPER PILOT LIGHT TO WASHER PILOT LIGHT TO DASH LIGHT JUNCTION #1 (+12V)
304	16	WHITE	WIPER PILOT LIGHT TO WASHER PILOT LIGHT TO SPEEDOMETER GA. BRACKET GND.
305	16	BLACK	FUEL GA. GND TO LEFT TURN SIGNAL INDICATOR GND, TO LOW WATER INDICATOR GND, TO HI BEAM GND, TO RIGHT TURN SIGNAL INDICATOR GND.
306	16	BLACK	FAST IDLE SWITCH INDICATOR LAMP GND TO TACHOMETER GA. GND
307	14	YELLOW	HEADLIGHT SWITCH (H) TO HEADLIGHT SW. MASTER RELAY COIL TERM. 85
308	14	BROWN	FUEL SOLENOID PULL-IN RELAY (ENG COMPT.) COIL TO STARTER SOLENOID
309	10	BLUE	FUEL SOLENOID PULL-IN RELAY (ENG. COMPT.) POWER SIDE TO STARTER/BATTERY POSITIVE JUNCTION.
310	14	RED	CIRCUIT BREAKER TO NO. 13 TO FAN RELAY CONTACT TERM. 30
311	14	BLUE	AIR TEMP SENSOR PLUG-IN (POS. B) TO FAN RELAY COIL TERMINAL 86
312	14	BLACK	AIR TEMP SENSOR PLUG-IN (POS C) TO FAN WATER TEMP SENSOR
313	14	WHITE	FAN RELAY COIL TERM 85 (GND) TO GND STUD IN REAR ELECT. BOX
314	14	RED	CIRCUIT BREAKER NO 13 TO FAN RELAY CONTACT TERM 30
315	14	BROWN	LOW/HIGH PRESSURE GAS VALVE RELAY TERM 85 TO STARTER SOLENOID TERM (R)
316	14	BLACK	LOW/HIGH PRESSURE GAS VALVE RELAY TERM 30 TO OIL PRESSURESTAT (GAS VALVE) 12V FEED
317	14	WHITE	OIL PRESSURESTAT (GAS VALVE) +12V RETURN TO TERM BD. NO. 3 POS. 2
318	14	RED	CIRCUIT BREAKER NO 2 TO ENGINE IGNITION COIL (POS)
319	14	BLUE	LOW PRESSURE GAS SHUTOFF VALVE TO +12V TO TERM BD. NO. 3 POS 2
320	14	WHITE	LOW PRESSURE GAS SHUTOFF VALVE GND TO GND STUD IN REAR ELECT. BOX
321	14	BROWN	LOW/HIGH PRESSURE GAS VALVE RELAY TERM 87 TO TERM BD NO. 3 POS. 1
322	14	BLACK	TERM. BD. NO. 2 POS. 6 (WITH CIRC. # 19 TO TERM. BD. NO. 3 POS. 1
323	14	RED	MODULAR REAR ELECT. BOX TERM BD. NO. 1 POS. 1 TO CRANK INTERLOCK/POWER INPUT RELAY TERM 85
324	10	RED	CIRCUIT BREAKER NO. 19 (30 AMP) TO CRANK INTERLOCK/POWER INPUT RELAY TERM 85
325	10	RED	HOT POWER STUD NO. 3 TO CIRCUIT BREAKER NO. 19
326	14	BROWN	ABS WARNING LAMP RELAY TERM 87A TO ABS DASH WARNING LAMP
327	14	BLUE	CIRCUIT BREAKER NO 11 TO ABS WARNING LAMP RELAY TERM 85 AND 30
328	14	RED	CIRCUIT BREAKER NO 11 TO RETARDER INTERLOCK RELAY TERM 85 AND 30
329	14	BLACK	RETARDER INTERLOCK RELAY TERN 87A TO RETARDER IN USE CIRCUIT (IN SERIES)
330	14	BLACK	(JUMPER) FRONT ELECTRIC SIDE PANEL TERM. BD. POS. 6 TO #19
331	14	RED	CN9 ELECTRONIC OVERSPEED GOVERNOR (RED WIRE) TO CIRCUIT BREAKER NO. 15 (LOAD)
332	14	GREEN	TERM. BD. NO. 3, POS. 7 TO CN9 ENGINE IGNITION COIL (BROWN WIRE)
333	14	BLACK	CN9 ELECTRONIC OVERSPEED GOVERNOR (BLACK WIRE) TO GND STUD IN MODULAR REAR ELECT BOX
334	14	RED	BATTERY (+) FUSED, 10 AMP, UNCONDITIONED, UNSWITCHED (ANTI-LOCK DIAGNOSTIC PLUG)
335	14	BLACK	BATTERY (-) (ANTILOCK DIAGNOSTIC CONNECTOR PLUG)
336	14	WHITE	SPARE (ANTILOCK DIAGNOSTIC CONNECTOR PLUG)
337	14	BLUE	ENGINE PROGRAMMING (ANTILOCK DIAGNOSTIC CONNECTOR PLUG)
338	14	WHITE	REVERSE RELAY (TERM. 86) GND TO FRONT SIDE ELECT. PANEL TERM. BD. (BACK-UP LIGHTS)
339	14	RED	CIRCUIT BREAKER NO. 8 TO REVERSE RELAY (TERM. 30)
340	14	RED	REVERSE RELAY (TERM. 87) TO FRONT SIDE ELEC. PANEL TERM. BD. (BAK-UP LIGHTS)
341	14	BLACK	(JUMPER) 5 AMP FUSE & FUSE HOLDER TO FAST IDLE SYSTEM PRESSURESTAT (PARK BRAKE SHIFTER)
342	14	BLACK	(JUMPER) FAST IDLE SYSTEM PRESSURESTAT (PARK BRAKE SHIFTER) TO FRONT SIDE PANEL TERM. BD. #87
343	14	RED	CIRCUIT BREAKER NO. 12 TO DRAINS MOMENTARY SW. INPUT
344	14	BLUE	DRAINS MOMENTARY SW. OUTPUT (RS) TO RS SOLENOID DRAIN VALVES
345	14	BROWN	DRAINS MOMENTARY SW. OUTPUT (LS) TO LS SOLENIOID DRAIN VALVES
346	14	BLACK	LS SOLENOID DRAIN VALVES GND TO GND ON FRAME
347	14	BLACK	RS SOLENOID DRAIN VLAVES GND TO GND ON FRAME
348	14	BLACK	SERIAL A (+) TERMINAL BD. (REAR BOX) TO SERIAL B (+) DIAGNOSTIC CONNECTOR PLUG, PIN A
349	14	WHITE	SERIAL B (-) TERMINAL BD. (REAR BOX) TO SERIAL B (-) DIAGNOSTIC CONNECTOR PLUG, PIN B
350	16	WHITE	ABS DASH WARNING LAMP GND TO GAUGE GND
351	16	WHITE	CRANK INTERLOCK/POWER INPUT RELAY TERM. 86 TO GND
352	16	RED	GFI IGNITON RELAY NO. 1, TERM. 85 TO FUSE NO. 3 (3 AMP)
353	16	RED	GFI IGNITION RELAY NO. 1, TERM. 30 TO FUSE NO. 2 (10 AMP)
354	16	RED	GFI HARNESS CONNECOTR P12, PIN A TO FUSE NO. 1 (3 AMP)
355	16	BLUE	GFI HARNESS CONNECTOR P12, PIN B TO IGNITION RELAY NO. 1, TERM. 87
356	16	GREEN	GFI HARNESS CONNECTOR P12, PIN C TO TGNITION RELAY NO. 1, TERM. 87
357	16	BROWN	GFI HARNESS CONNECTORS J21/J22 TO IGNITION RELAY NO. 1, TERM.87
358	16	GREEN	GFI HARNESS CONNECOTR J9 TO MODULAR REAR ELECT. BOX TO FRONT, FUEL GAUGE (#122)
359	16	WHITE	GFI HARNESS CONNECTOR J9 TO MODULAR REAR ELECT. BOX TO FRONT, FUEL GAUGE (#123)
360	16	BLUE	GFI HARNESS CONNECTOR J11 TO MODULAR REAR ELECT. BOX, TERM. BD. NO. 1, POS. 1 (#112)
361	16	RED	ALTRONIC IGNITION MODULE (+12V) TO FUSE NO.4 (10 AMP) AT CIRCUIT BREAKER NO.15(SW/ +12V IGN.)
362	16	WHITE	ALTRONIC IGNITION MODULE (GND) TO GND STUD IN MOD. REAR BOX, FUSED AT 10 AMP
363	16	RED	SIGNAL GENERATOR (+12V INPUT) TO C.B. NO.15, SWITCHED +12V IGNIITION
364	10	RED	CIRCUIT BREAKER NO.4 TO HIGH BEAM HEADLIGHT RELAY TERM. 30
365	18	GREEN	CONNECTOR P3, PIN B, MATES TO GFI HARNESS CONNECTOR J3, PIN B TO CONNECTOR P3A, PIN B
366	18	RED	CONNECTOR P3, PIN C, MATES TO GFI HARNESS CONN. J3, PIN C TO CONN. P3A, PIN C TO REGULATOR
367	18	BLACK	CONNECOTR P3, PIN E, MATES TO GFI HARNESS CONN. J3, PIN E, TO CONN. P3A, PIN E TO REGULATOR
368	16	BLACK	CONNECTOR P3, PIN F, MATES TO GFI HARNESS CONN. J3, PIN F, TO CONN. P3A, PIN F TO REGULATOR
369	16	BLACK	CONNECTOR P3, PIN G, MATES TO GFI HARNESS CONN. J3, PIN G, TO CONN. P3A, PIN G TO REGULATOR
370	18	BLUE	CONN. P1, PIN B, MATES TO GFI HARNESS CONN. J1, PIN B TO CONN. P1A, PIN B TO INTAKE AIR SENSOR
371	18	BLUE	CONN. P1, PIN A, MATES TO GFI HARNESS CONN. J1, PIN A TO CONN. P1A, PIN A TO INTAKE AIR TEMP. SENSOR
372	18	2 WIRE SHLD.	CABLE CONN. P5, PIN A, MATES TO GFI HARNESS CONN. J5, PIN A, TO SIGNAL GENERATOR CONN., PIN C
373	18	2 WIRE SHLD.	CABLE CONN. P5, PIN B, MATES TO GFI HARNESS CONN. J5, PIN B, TO SIGNAL GENERATOR CONN., PIN A
374	18	WHITE	CONN. P5, PIN F , MATES TO GFI HARNESS CONN. J5, PIN F, TO ALTRONIC IGN. MODULE 3 WAY CONN., PIN C
375	18	RED	CONN. P5, PIN G, MATES TO GFI HARNESS CONN. J5, PIN G TO ALTRONIC IGN. MODULE 3 WAY CONN. PIN A
376	18	WHITE	CONN. P5, PIN H, MATES TO GFI HARNESS CONN. J5, PIN H TO GND (SAME POINT AS RLI ON GFI HARNESS)
377	16	WHITE	SIGNAL GENERATOR CONN., PIN B TO GND (SAME POINT AS RLI ON GFI HARNESS)
378	16	BLACK	ALTRONIC IGNITION MODULE 4 WAY CONN. PIN A TO 6 - TOWER COIL MODULE CONN. PIN B
379	16	BLACK	ALTRONIC IGNITION MODULE 4 WAY CONNECTOR PIN B TO 6-TOWER COIL MODULE CONN. PIN C
380	16	BLACK	ALTRONIC IGNITION MODULE 4 WAY CONNECTOR PIN C TO 6- TOWER COIL MODULE CONNECTOR PIN C
381	16	BLACK	ALTRONIC IGNITION MODULE 4 WAY CONNECTOR PIN D TO 6- TOWER COIL MODULE CONNECTOR PIN D
382	14	WHITE	GND STUD IN MODULAR REAR BOX TO GND POST STUD ON GFI COMPU VALVLE MTG. BRACKET
383	18	YELLOW	VEHICLE INTERFACE CONNECTOR (F-2) FAST IDLE RELAY (SF3) COMMON TO CIRCUIT #67 (AT DASH PANEL)
384	18	RED	VEHICLE INTERFACE CONNECTOR (F-3) FAST IDLE RELAY (SF3) N.O. TO CIRCUIT #87 (AT DASH PANEL)
385	14	BLACK	FUEL FILL DOOR SW. (CNG) TO MODULAR REAR ELECT. BOX TERM. BD. NO. 3, POS. 5
386	14	WHITE	FUEL FILL DOOR SW. (CNG) TO MODULAR REAR ELECT. BOX TERM. BD. NO. 1, POS. 1
387	14	YELLOW	FRONT SIDE ELECT. PANEL DROP OUT TO LUGGAGE COMPARTMENT LAMP(S) DROP OUT
388	14	BLACK	MOD. REAR ELECT. BOX POWER TERM. BD. (BAT. POS. +12V) TO FRONT SIDE PANEL GAS SENSOR TERM.BD.
389	14	WHITE	MOD. REAR ELECT. BOX POWER TERM. BD. (BAT. NEG GND) TO FRONT SIDE PANEL GAS SENSOR TERM. BD.
390	14	LT. BLUE	SIDE PANEL CIRCUIT BREAKER NO. 19 TO HEADLIGHT SW. (5) (TAIL/MARKER LGT. INPUT)
391	14	RED	SIDE PANEL CIRCUIT BREAKER NO.22 TO DUAL ALARM WARNING BUZZER (BAT) TERM. (W/#13)
392	14	RED	HEATED AIR TANK RELAY COIL (85) TO SIDE PANEL CIRCUIT BREAKER NO.13
393	10 OR 12	RED	FRONT PANEL CIRCUIT BREAKER NO.22 TO HYDRO-MAX RESERVE PUMP RELAY (30)
394	14	RED	FRONT PANEL CIRCUIT BREAKER NO.23 TO ELECT. FAN CONTROL RELAY (30)
395	2	RED	FRONT PANEL MAIN 150 AMP CIRCUIT BREAKER TO BODY MAIN POWER SOLENOID (BAT. HOT FEED)
396	14	WHITE	FRONT PANEL GND STUD TO SIDE PANEL GND STUD
397	10	WHITE	SIDE PANEL GND STUD TO FRAME GND
398	14	GREEN	BRAKE WARNING LAMP TO HYDRO-MAX CONTROL MODULE (C)
399	14	BROWN	DUAL ALARM WARNING BUZZER(S) TO HYDRO-MAX CONTROL MODULE(C)
400	14	ORANGE/WHITE	FRONT PANEL CIRCUIT BREAKER NO.5 TO HYDRAULIC BRAKE SWITCH (INPUT)
401	14	ORANGE/BLACK	STOP LIGHT SWITCH TO HYDRO-MAX CONTROL MODULE (H)
402	14	RED	DIODE ASM. 1 & 2 (OUTPUT) TO HYDRO-MAX RESERVE PUMP MOTOR RELAY (85)
403	14	WHITE	GND STUD ON FRONT PANEL TO HYDRO-MAX CONTROL MODULE (D)
404	14	RED/BLACK	DIODE ASM. 1 & 2 (OUTPUT) TO HYDRO-MAX CONTROL MODULE (E)
405	14	WHITE	HYDRO-MAX RESERVE PUMP MOTOR RELAY (86) TO HYDRO-MAX CONTROL MODULE (A)
406	10	RED	HYDRO-MAX RESERVE PUMP MOTOR RELAY (87) TO HYDRO-MAX RESERVE PUMP MOTOR
407	14	RED	HYDRO-MAX RESERVE PUMP MOTOR TO HYDRO-MAX CONTROL MODULE (F)
408	14	WHITE/BLACK	HYDRO-MAX CONTROL MODULE (A) TO PRESSURE DIFFERENTIAL SWITCH
409	14	WHITE	PRESSURE DIFFERENTIAL SWITCH TO FLOW SWITCH
410	14	ORANGE/BLACK	DIODE ASM./(INPUT) TO HYDRO-MAX CONTROL MODULE (G)
411	14	RED	PARK BRAKE WARNING LAMP TO BRAKE WARNING LAMP
412	14	WHITE	IGNITION SW. (GND) POS. TO PARK BRAKE WARNING LAMP (INPUT)
413	14	BLUE	PARK BRAKE SWITCH TO PARK BRAKE WARNING LAMP
414	16	RED	ELECT. FAN CONTROL RELAY (87A) TO DIODE ASM.
415	14	RED	IGNITION SW. (IGN. RUN) POS. TO ALTERNATOR EXTERNAL IGN. POST
416	16	BLUE	BRAKE WARNING LAMP (+12V) TO LOW BRAKE FLUID WARNING LAMP
417	16	BLUE/WHITE	LOW BRAKE FLUID WARNING LAMP TO LOW LEVEL SW. IN BRAKE FLUID RESERVOIR
418	16	WHITE	LOW LEVEL SW. IN BRAKE FLUID RESERVOIR TO GND STUD ON FRONT PANEL
419	14	WHITE	STOP LAMP RELAY GND TO GND STUD ON FRONT PANEL
420	14	WHITE	HEATED AIR TANK DRAIN RELAY GND TO GND STUD ON FRONT PANEL
421	14	GRAY/WHITE	HEATED AIR TANK DRAIN RELAY (87) TO AIR TANK HEATED DRAINS
422	14	BLACK	DIODE ASM. (OUTPUT) TO DELCO 21SI ALTERNATOR TERMINAL "I"
423	14	RED	DIODE ASM. NO. 1 & 2 (OUTPUT) JUMPER
424	16	WHITE	PARK BRAKE SW. AND HYD. BRAKE FLOW SW. (GND) TO GND STUD ON SIDE ELECT. PANEL
425	16	RED	2 AMP INLINE FUSE HOLDER TO INDEX FAN/SHUTTER SENSOR (+12V) POS. A
426	16	BLACK	INDEX FAN/SHUTTER SENSOR (GND) POS. B TO GND STUD ON FRONT PANEL
427	16	BLUE	INDEX FAN/SHUTTER SENSOR (175°F NC) POS. C TO INDEX SHUTTER INLET AIR TEMP. SENSOR POS. A
428	16	RED	7.5 AMP INLINE FUSEHOLDER TO SHUTTER CONTROL RELAY (+12V) TERM. 30
429	16	BLUE	INDEX SHUTTER INLET AIR TEMP. SENSOR (POS. B) TO SHUTTER CONTROL RELAY TERM. 85
430	16	WHITE	INDEX SHUTTER INLET AIR TEMP. SENSOR (POS. C) TO GND STUD ON FRONT PANEL
431	16	WHITE	ELECT. FAN CONTROL RELAY TERM. 86 TO GND STUD ON FRONT PANEL
432	16	WHITE	SHUTTER CONTROL RELAY TERM. 86 TO GND STUD ON FRONT PANEL
433	16	BLUE	SHUTTER CONTROL RELAY TERM. 87 TO SHUTTER SOLENOID (+12V)
434	16	WHITE	ELECT. FAN CLUTCH (GND) POS. B TO GND STUD ON FRONT PANEL
435	14	RED	FRONT PANEL CIRCUIT BREAKER NO.24 TO 7.5 AMP INLINE FUSE HOLDER
436	14	RED	FRONT PANEL CIRCUIT BREAKER NO.24 TO 2 AMP INLINE FUSE HOLDER
437	16	WHITE	SHUTTER SOLENOID GND TO FRAME GND
438	14	WHITE	STARTER RELAY COIL GND TO FRONT PANEL GND STUD
439	16	WHITE	SPEEDOMETER GA "GND" TERM. TO RIGHT TURN SIGNAL DASH INDICATOR GND
440	16	WHITE	RIGHT TURN SIGNAL DASH IND. GND TO HI-BEAM DASH INDICATOR GND
441	16	WHITE	HI-BEAM DASH IND. GND TO LEFT TURN SIGNAL DASH INDICATOR GND
442	16	BLACK	SIDE PANEL CIRCUIT BREAKER NO. TO AIR DRYER RELAY COIL 85
443	16	WHITE	AIR DRYER RELAY 86 TO FRONT PANEL GND STUD
444	14	RED/WHITE	FRONT PANEL MAXIFUSE CIRCUIT BREAKER NO. TO AIR DRYER RELAY 30
445	14	WHITE	AIR DRYER HEATER GND TO FRAME GND
446	14	BROWN	PARK LAMPS (ER) LS
447	14	BROWN	PARK LAMPS (ER) RS
448	14	WHITE	AUDIBLE TURN SIGNAL BUZZER GND TO GND STUD ON SIDE PANEL
449	14	WHITE	W/S WIPER LIGHTING CONTROL RELAY TERM. 86 TO GND LUG SIDE PANEL
450	14	WHITE	W/S WIPER HEAD LIGHT RELAY TERM. 86 TO GND LUG SIDE PANEL
451	14	WHITE	W/S WIPER TAIL LIGHT RELAY TERM. 86 TO GROUND LUG SIDE PANEL
452	16	WHITE	FAN (AIR) SOLENOID VALVE GND TO STARTER RELAY MTG. BRACKET
453	16	WHITE	STARTER RELAY COIL GND TO MTG. BRACKET

NOTES:

1.) WIRING COLORS-FIRST COLOR INDICATES BASE COLOR OF WIRE.
ONE DIAGONAL SLASH INDICATES ONE TRACER STRIPE, TWO DIAGONAL SLASH MARKS INDICATE TWO TRACER STRIPES USED.

2.) COLOR CODES ARE DIVIDED INTO GROUPS AS FOLLOWS:
RED-GENERATOR & MAIN FEED CIRCUITS
VIOLET-ENGINE CONTROL CIRCUITS
DK BLUE-ENGINE ACCESSORY CIRCUITS
YELLOW-HEADLIGHT CIRCUITS
BROWN-CLEARANCE IDENTIFICATION MARKER & TAIL LIGHTS CIRCUIT
LIGHT BLUE-INTERIOR LIGHTING CIRCUITS
ORANGE-TURN SIGNAL, HAZARD & STOP LIGHTS CIRCUITS
LIGHT GREEN-INSTRUMENT CIRCUITS
GRAY-BRAKE SYSTEMS CIRCUIT
BLACK-BACK UP LIGHTS
PINK-DRIVE AID CIRCUITS
DK GREEN-HYSOR PROTECTION CIRCUITS
WHITE-GROUND CIRCUITS

SHEET 2 OF 3

Thomas BUILT BUSES

62201002 L

CHART - ELECTRICAL CIRCUITS w/COLOR CODES, 1990 (CHASSIS)

CIRC #	AWG	COLOR	CIRCUIT DESCRIPTION
454	18	RED	VEHICLE INTERFACE CONNECTOR RETARDER IN-USE RELAY (86) TO RETARDER IN-USE LAMP
455	18	RED	VEHICLE INTERFACE CONN. (E-1) RETARDER VIM BRAKE LIGHT RELAY TO RETARDER IN
	14	BROWN	USE LAMP AND RELAY (86)
456	18	YELLOW	JUMPER DASH GAUGE (+12V) IGN TO TRANS. TEMP. OVERHEAT LAMP (+12V IN)
457	18	WHITE	VEHICLE INTERFACE CONN. (D-1) RETARDER IN-USE TO RETARDER VIM BRAKE LIGHT RELAY
	16		(NC) TO DASH GAUGE GND
458	16		JUMPER, C.B. NO. 5 (BAT) TO RETARDER IN-USE RELAY (30)
459	16		JUMPER, C.B. NO.11 (SW. IGN) TO RETARDER IN-USE RELAY (85)
460	16		JUMPER, SIDE PANEL TERMINAL BOARD BRAKE LIGHTS TO RETARDER IN-USE RELAY (87)
461	14	GREEN	CKT. BREAKER NO.29 IN SIDE ELECT. PANEL TO SHIFT UNIT SWITCH HARNESS (2 SPD AXLE)
462	14	RED	SHIFT UNIT SWITCH HARNESS TO PACKARD 3-WAY WEATHERPACK CONN. (POS. A)
463	14	BLACK	SHIFT UNIT SWITCH HARNESS TO PACKARD 3-WAY WEATHERPACK CONN. (POS, C)
464	14	GREEN	PACKARD 3-WAY WEATHERPACK CONN. (POS. B) TO CHASSIS GND
465	12	RED	POWER THRU 25 AMP FUSE TO OEM CONN. 1 MOD. BOX TERM. BD. NO.3 POS. 5 (BAT) POS. G
466	12	RED	POWER THRU 25 AMP FUSE TO OEM CONN. 1 MOD. BOX TRM. BD. #3, POS. D
467	16	BLACK	J. GCM (-) CONN. 2 POS. 17, TO OEM CONN. NO. 1, POS. H
468	16	WHITE	J. GCM (+) CONN. NO.2, POS. 16, TO OEM CONN. NO. 1, POS. J
469	16	WHITE	J. GCM (+) CONN. NO.2, POS. 4, TO OEM CONN. NO.1, POS. M
470	16	BLACK	J. GCM (-) CONN. NO.2, POS. 3, TO OEM CONN. NO. 1, POS. N
471	16	WHITE	J. GCM (+) CONN. NO.2, POS. 12, TO OEM CONN. NO.1, POS. R
472	16	BLACK	J. GCM (-) CONN. NO.2, POS. 14, TO OEM CONN. NO. 1, POS. S
473	16	RED	J. GCM (+) CONN. NO.2, POS. 23, TO OEM CONN. NO. 1, POS. U
474	16	BLACK	J. GCM (-) CONN. NO.2, POS. 15, TO OEM CONN. NO. 1, POS. V
475	14	RED	SIDE PANEL CIRCUIT BREAKER TO ROLL BACK SENSOR BOX (RED, +12V)
476	14	WHITE	ROLL BACK SENSOR BOX (WHITE, SIGNAL) TO BACKING ALARM (FEED)
477	14	BLACK	ROLL BACK SENSOR BOX (BLACK, GND) TO SIDE PANEL GND STUD
478	16	BLUE	OVERSPEED +12 SIGNAL TO BODY DOOR INTERLOCK C2 TO BODY DOOR INTERLOCK
479	16	GREEN	OVERSPEED INDICATOR F3 TO DASH
480	18	RED	VEHICLE INTERFACE CONNECTOR F2 TO C.B. NO. 8
481	8	WHITE	GROUND RETURN TO TOW VEHICLE
482	10	BROWN	TAIL AND LICENSE PLATE LAMP FOR TOWING DEVICE
483	10	GREEN	RIGHT HAND SIGNAL AND HAZARD SIGNAL
484	10	RED	STOP LAMPS AND ANTI-WHEEL LOCK DEVICE
485	10	YELLOW	LEFT HAND TURN SIGNAL AND HAZARD SIGNAL
486	10	BLACK	CLEARANCE SIDE MARKER AND IDENTIFICATIONS MARKER
487	10	BLUE	AUXILIARY NOT USED
488	18	RED	KNEEL SW. POS. 3 TO KNEEL SOLENOID
489	18	RED	KNEEL SW. POS. 2 TO KNEELING RELAY POS. 87A (SIDE ELECT. PANEL)
490	18	WHITE	KNEEL SW. POS. 7 TO GND (6" JUMPER)
491	18	YELLOW	KNEEL SW. POS. 8 TO SIDE ELECT. PNL DASH LIGHTS (18" JUMPER)
492	18	YELLOW	REAR ELECT. BOX CB13 TO HYDRAULIC RESERVOIR LEVEL SW. CONN. C1
493	18	YELLOW	REAR ELECT. BOX TB2-19 TO HYDRAULIC RESERVOIR LEVEL SW. CONN. C1
494	18	WHITE	PILOT LAMP TO GND (6" JUMPER)
495	18	YELLOW	PILOT LAMP TO SIDE ELECT. PNL POSTION 19 (12" JUMPER)
496	12	WHITE	+12V CB19,(30 OR 32) SIDE ELECTRIC PANEL TO SPLICE A MVP-ER & EF (EF IN BRACKETS)
496A	14	WHITE	WIRE A TO PIN 2, CONNECTOR NO. 2 TIMER (EF WIRE A TO SPLICE C)
496B	14	WHITE	WIRE B TO PIN A OF CONN. 1 HEATER (EF SAME)
496C	14	WHITE	WIRE C TO SPLICE D - E (EF SAME)
496D	14	WHITE	WIRE D TO PIN 6 CONN. NO. 2 TIMER (EF 496D TO PIN 2 CONN. NO. 2 TIMER)
496E	14	WHITE	WIRE E TO SPLICE F (EF SAME)
496F	14	WHITE	WIRE E-F TO PIN E CONN.NO.1 HEATER (EF SAME)
496G	14	WHITE	WIRE G TO PIN F CONN.NO.1 HEATER (EF SAME)
497	14	RED	CONNECTOR AT TIMER PIN 3 TO CONNECTOR AT HEATER PIN C BOTH ER & EF
498	14	BLUE	+12V IGN.CB11 SIDE ELECTRIC PNL TO CONN. PIN 4 OF TIMER BOTH ER & EF
499	12	GREEN	GROUND STUD SIDE ELECTRIC PANEL TO SPLICE A - B MVP-ER & EF (EF IN BRACKETS) EF SAME
499A	14	GREEN	WIRE A TO PIN 5 CONN. NO. 2. TIMER (EF SAME)
499B	14	GREEN	WIRE B FROM SPLICE A,B TO SPLICE C. (EF SAME)
499C	14	GREEN	WIRE C TO PIN J OF CONN. NO. 1. (EF SAME)
499D	14	GREEN	WIRE D TO PIN G OF CONN. NO. 1 (EF SAME)
499E	14	GREEN	WIRE E TO PIN H OF CONN. NO. 1. (EF SAME)
500	14	YELLOW	CONNECTOR AT TIMER PIN 7 TO PIN B AT HEATER BOTH ER & EF
501	14	BLACK	SIDE ELECTRIC PANEL DASH LIGHTS TO CONN. PIN 8 OF TIMER BOTH ER & EF
502			
503			
504	14	YELLOW	JUMPER 12V TO CB6
505	14	WHITE	FROM CB6 TO PIN 85 BUZER RELAY
505A	14	WHITE	JUMPER BUZER RELAY TO GND
505B	14	WHITE	JUMPER FROM BUZER TO GND
32A	14	YELLOW	JUMPER FROM EXISTING LIGHT RELAY PIN 30 TO BUZER RELAY PIN 30
32C	14	YELLOW	JUMPER BUZER RELAY TO BUZER
506	16	BLACK	JUMPER CB NO 25 TO ONSPOT SWITCH CON F AND O
507	16	BLACK	JUMPER ONSPOT SWITCH D TO AIR SOLENOID
508	16	BLACK	JUMPER ONSPOT SWITCH CON F TO GROUND
509	16	BLACK	JUMPER TERMINAL NO 11 TO ONSPOT SWITCH CON F AND O
510	16	WHITE	GROUND FOR DASH INDICATOR LIGHTS
511	14	VIOLET	CIRCUIT BREAKER TO STARTER PARK BRAKE INTERRUPT RELAY TERM. 30
512	14	VIOLET	STARTER PARK BRAKE INTERRUPT RELAY TERM. 85 TO STARTER CONTROL SIGNAL SERVICE TERMINAL
513	14	VIOLET	STARTER PARK BRAKE CONTROL SIGNAL SERVICE TERMINAL TO DRL TAILLIGHT RELAY TERM. 85
514	14	VIOLET	STARTER PARK BRAKE CONTROL SIGNAL SERVICE TERMINAL TO DRL HEADLIGHT RELAY TERM. 85
515	14	VIOLET	STARTER PARK BRAKE CONTROL SIGNAL SERVICE TERMINAL TO DRL PARKING LIGHT RELAY TERM. 85
516	14	BROWN	PARK BRAKE INTERRUPT RELAY TERM 85 COIL POWER FEED
517	14	BLACK	PARK BRAKE SWITCH TO INTERRUPT RELAY TERM 86 (GROUND SIGNAL)
518	12	RED	SIDE PANEL CIRCUIT BREAKER TO ABS ECU (+12V BATT.)
519	16	RED	SIDE PANEL CIRCUIT BREAKER TO ABS ECU (+12V IGN.)
520	18	BLACK	SIDE PANEL TERM. BD NO. 2 POS 2 TO ABS ECU (J1587-)
521	18	WHITE	SIDE PANEL TERM. BD NO. 2 POS. 3 TO ABS ECU (J1587 +)
522	16	YELLOW	ABS WARNING LAMP RELAY (86) TO ABS ECU
523	16	WHITE	SIDE PANEL GROUND STUD TO ABS ECU (GND)
524	16	RED	SIDE PANEL CIRCUIT BREAKER TO ABS WARNING LAMP RELAY (30&85)
525	12	RED	+12V BATT. TERM. BD TO 4 POS. FUSEBLOCK (ABS ECU)
526	10	RED	+12V BATT. TERM. BD TO 4 POS. FUSEBLOCK (ABS PUMP RELAY)
527	10	RED	4 POS. FUSEBLOCK TO ABS PUMP RELAY (30)
528	14	RED	FUSE PANEL TERM. POST (IGN.) TO 4 POS. FUSEBLOCK
529	16	RED	ABS ECU TO ABS PUMP RELAY (85)
530	16	WHITE	ABS PUMP RELAY (86) TO SIDE PANEL GROUND STUD
531	10	RED	ABS PUMP RELAY (87) TO RECIRCULATION PUMP

CIRC #	AWG	COLOR	CIRCUIT DESCRIPTION
532	16	BLUE	ABS ECU (MOTOR MONITOR) TO ABS PUMP RELAY (87 W/531)
533	10	WHITE	ABS RECIRCULATION PUMP TO SIDE PANEL GROUND
534	16	RED/WHITE	ABS ECU TO ABS MODULATOR UNIT (LEFT FRONT INLET)
535	16	RED/BLACK	ABS ECU TO ABS MODULATOR UNIT (LEFT FRONT OUTLET)
536	16	RED/WHITE	ABS ECU TO ABS MODULATOR UNIT (RIGHT FRONT INLET)
537	16	RED/BLACK	ABS ECU TO ABS MODULATOR UNIT (RIGHT FRONT OUTLET)
538	16	RED/WHITE	ABS ECU TO ABS MODULATOR UNIT (LEFT REAR INLET)
539	16	RED/BLACK	ABS ECU TO ABS MODULATOR UNIT (LEFT REAR OUTLET)
540	16	RED/WHITE	ABS ECU TO ABS MODULATOR UNIT (RIGHT REAR INLET)
541	16	RED/BLACK	ABS ECU TO ABS MODULATOR UNIT (RIGHT REAR OUTLET)
542	18	BLACK	ABS ECU TO LEFT FRONT WHEEL SENSOR (SIGNAL+)
543	18	WHITE	ABS ECU TO LEFT FRONT WHEEL SENSOR (RETURN -)
544	18	BLACK	ABS ECU TO RIGHT FRONT WHEEL SENSOR (SIGNAL+)
545	18	WHITE	ABS ECU TO RIGHT FRONT WHEEL SENSOR (RETURN -)
546	18	BLACK	ABS ECU TO LEFT REAR WHEEL SENSOR (SIGNAL +)
547	18	WHITE	ABS ECU TO LEFT REAR WHEEL SENSOR (RETURN -)
548	18	BLACK	ABS ECU TO RIGHT REAR WHEEL SENSOR (SIGNAL +)
549	18	WHITE	ABS ECU TO RIGHT REAR WHEEL SENSOR (RETURN -)
550	16	WHITE	ABS ECU TO ABS MODULATOR UNIT (REFERENCE GROUND)
551	8	WHITE	ABS MODULATOR UNIT TO GROUND
552	16	GREEN	ABS ECU TO SIDE ELECTRICAL PANEL (ENDURANCE BRAKE)
553	16	YELLOW/WHITE	ABS WARNING LAMP RELAY (86 W/522) TO ABS BLINK CODE ACTIVATION SWITCH
554	16	WHITE	ABS BLINK CODE ACTIVATION SWITCH TO SIDE PANEL GROUND STUD
555	18	DK. BLUE	PWM VARIABLE SPEED FAN CONTROL SIGNAL
556	16	WHITE	ABS ENDURANCE BRAKE RELAY (86 & 30) TO SIDE PANEL GROUND STUD
557	16	WHITE	ABS ENDURANCE BRAKE RELAY (87) TO SIDE PANEL TERM. BD. NO. 1 POS. 4
558	18	DK. BLUE	ENGINE COOLANT TEMP SENSOR (SIGNAL +) TO VARIABLE SPEED FAN CONTROLLER
559	18	WHITE	ENGINE COOLANT TEMP SENSOR (SIGNAL -) TO VARIABLE SPEED FAN CONTROLLER
560	18	DK. BLUE/WHITE	CHARGED AIR TEMP SENSOR (SIGNAL +) TO VARIABLE SPEED FAN CONTROLLER
561	18	GRAY/BLACK	CHARGED AIR TEMP SENSOR (SIGNAL -) TO VARIABLE SPEED FAN CONTROLLER
562	12	RED	BATTERY POSITIVE INPUT TO 12/24V CONVERTER (12V) INPUT
563	12	BLACK	BATTERY NEGATIVE INPUT TO 12/24V CONVERTER (GND) INPUT
564	14	RED	12/24V CONVERTER (12V) INPUT TO 12V CONVERTER IGNITION
565	12	WHITE	12/24V CONVERTER (GND) INPUT TO 12/24V COMMON GND TERM. BD.
566	18	WHITE	NEUTRAL (FAST IDLE) RELAY (K7) POS.86 TO COMMON GND TERM. BD.
567	18	WHITE	STARTER INTERLOCK RELAY (K6) POS.86 TO COMMON GND TERM. BD.
568	18	WHITE	REVERSE RELAY (K8) POS.86 TO COMMON GND TERM. BD.
569	16	RED	DRIVE OFF INTERLOCK RELAY (S6) POS.30 TO KEY IGN. TERM. BD. NO.1
570	16	RED	RETARDER ON/OFF DASH SW. POS.2 TO KEY IGN. TERM. BD. NO.1
571	16	RED	RETARDER BRAKE PRESS SW. (S12) TO KEY IGN. TERM. BD. NO.1
572	16	RED	FUSE (F2) 8 AMP OUTPUT TO KEY IGN. TERM. BD. NO.1
573	16	RED	FUSE (F2) 8 AMP INPUT TO KEY IGN. TERM. BD. NO.2
574	16	RED	KEY IGNITION TERM. BD. NO.2 TO KEY IGN. TERM. BD. NO.3
575	16	RED	12V KEY IGNITION RELAY POS.87 TO KEY IGN. TERM. BD. NO.3
576	16	RED	KEY IGNITION TERM. BD. NO.3 TO FUSE (F1) 8 AMP INPUT
577	16	WHITE	12V KEY IGNITION RELAY POS.86 TO GND
578	16	RED	12V KEY IGNITION RELAY POS.85 TO 12V KEY IGNITION FEED
579	16	RED	12V KEY IGNITION RELAY POS.30 TO FUSE (F4) 8 AMP OUTPUT
580	16	RED	FUSE (F4) 8 AMP INPUT TO 12/24V CONVERTER 24V OUTPUT (KEY IGN.)
581	16	RED	12/24V CONVERTER 24V OUTPUT (BAT) TO FUSE (F3) INPUT
582	16	RED	FUSE (F3) 8 AMP OUTPUT TO 24V (BAT) TERM. BD. NO.4
583	16	WHITE	DRIVE OFF INTERLOCK RELAY (S6) POS.86 TO GND
584	16	RED	RETARDER ON/OFF SW (POS.2) TO RETARDER OVERHEAT LAMP (+24V IGN.)
585	16	WHITE	TRANSMISSION TEMP. GA. (S) POS. TO RETARDER OVERHEAT LAMP (GND)
586	16	DK. BLUE	RETARDER ON/OFF SW. TO RETARDER ON RELAY
587	16	DK. BLUE	RETARDER ON RELAY (POS. 87) TP ABS ON RELAY (POS. 30)
588	16	DK. BLUE	ABS ON RELAY (POS 87A) TO 1ST CLUTECH PRESS. SW. (TRANS)
589	16	DK. BLUE	1ST CLUTCH PRESS SW. TO BRAKE PRESS SW. (FRONT TOEBOARD)
590	16	GRAY	BRAKE PRESS. SW. (FRONT TOEBOARD) TO RETARDER CONNEC. (POS 4)
591	16	WHITE	RETARDER CONN (POS 2) TO REAR MOD BOX GND
592	16	DK. BLUE	1ST CLUTCH PRESS SW. TO TB3-4
593	16	DK. BLUE	TB3-4 TO RETARDER CONN. (POS 1)
594	16	DK. BLUE	RETARDER CONNN (POS 3) TO REAR MOD BOX GND
595	16	DK. BLUE	TB3-5 TO MODULATOR RELAY (POS 85)
596	16	GRAY	CB TO ABS ON RELAY (POS 85)
597	16	GRAY	ABS ON RELAY (POS 86) TO TB3-5
598	16	GRAY	CB#18 TO IDLE VALIDATION SW (CM)
599	16	GRAY	IDLE VALIDATION SW (NC) TO RETARDER ON RELAY(POS 85)
600	18	RED	TRANS. NEUTRAL SIGNAL (TB1-2) TO KNEELING RELAY (POS. 30) - CAT 3126
600A	18	RED	TRANS. NEUTRAL SIGNAL (TB1-2) TO NEUTRAL RELAY (POS. 85) - 98 CUM ISB, 97 CAT 3126
600B	18	RED	CB #11 TO NEUTRAL RELAY (POS. 86) - 98 CUM ISB, 97 CAT 3126
600C	18	RED	NEUTRAL RELAY (POS. 86) TO NEUTRAL RELAY (POS. 30) - 98 CUM ISB, 97 CAT 3126
600D	18	RED	NEUTRAL RELAY (POS. 87) TO KNEELING RELAY (POS. 30) - 98 CUM ISB, 97 CAT 3126
601	18	RED	KNEEL RELAY (POS. 85) TO WCL LIGHT
602	18	WHITE	KNEEL RELAY (POS. 86) TO GND STUD (SIDE PNL)
603	14	RED	KNEEL SWITCH (POS. 2) TO INTERLOCK OVERRIDE SWITCH
604	2	RED	REAR POWER STUD #1 TO BODY SYSTEM CIRC. BREAKER #25 (BAT)
605	2	RED	BODY SYSTEM CIRC. BREAKER #25 (AUX) TO FRONT POWER STUD
606	18	RED	IGNITION POWER FRONT CIRC. BREAKER #8 TO TIME DELAY RELAY (POS.1)
607	18	WHITE	TIME DELAY RELAY (POS.2) TO FRONT GROUND STUD

NOTES:

1.) WIRING COLORS-FIRST COLOR INDICATES BASE COLOR OF WIRE. ONE DIAGONAL SLASH INDICATES ONE TRACER STRIPE, TWO DIAGONAL SLASH MARKS INDICATE TWO TRACER STRIPES USED.

2.) COLOR CODES ARE DIVIDED INTO GROUPS AS FOLLOWS:
RED-GENERATOR & MAIN FEED CIRCUITS
VIOLET-ENGINE CONTROL CIRCUITS
DK BLUE-ENGINE ACCESSORY CIRCUITS
YELLOW-HEADLIGHT CIRCUITS
BROWN-CLEARANCE IDENTIFICATION MARKER & TAIL LIGHTS CIRCUIT
LIGHT BLUE-INTERIOR LIGHTING CIRCUITS
ORANGE-TURN SIGNAL, HAZARD & STOP LIGHTS CIRCUITS
LIGHT GREEN-INSTRUMENT CIRCUITS
GRAY-BRAKE SYSTEMS CIRCUIT
BLACK-BACK UP LIGHTS
PINK-DRIVE AID CIRCUITS
DK GREEN-KYSOR PROTECTION CIRCUITS
WHITE-GROUND CIRCUITS

SHEET 3 OF 3

Thomas BUILT BUSES

62201002 L

CHART - ELECTRICAL CIRCUITS w/COLOR CODES, 1990 (CHASSIS)

MVP-ER
MAIN BODY
SCHEMATICS

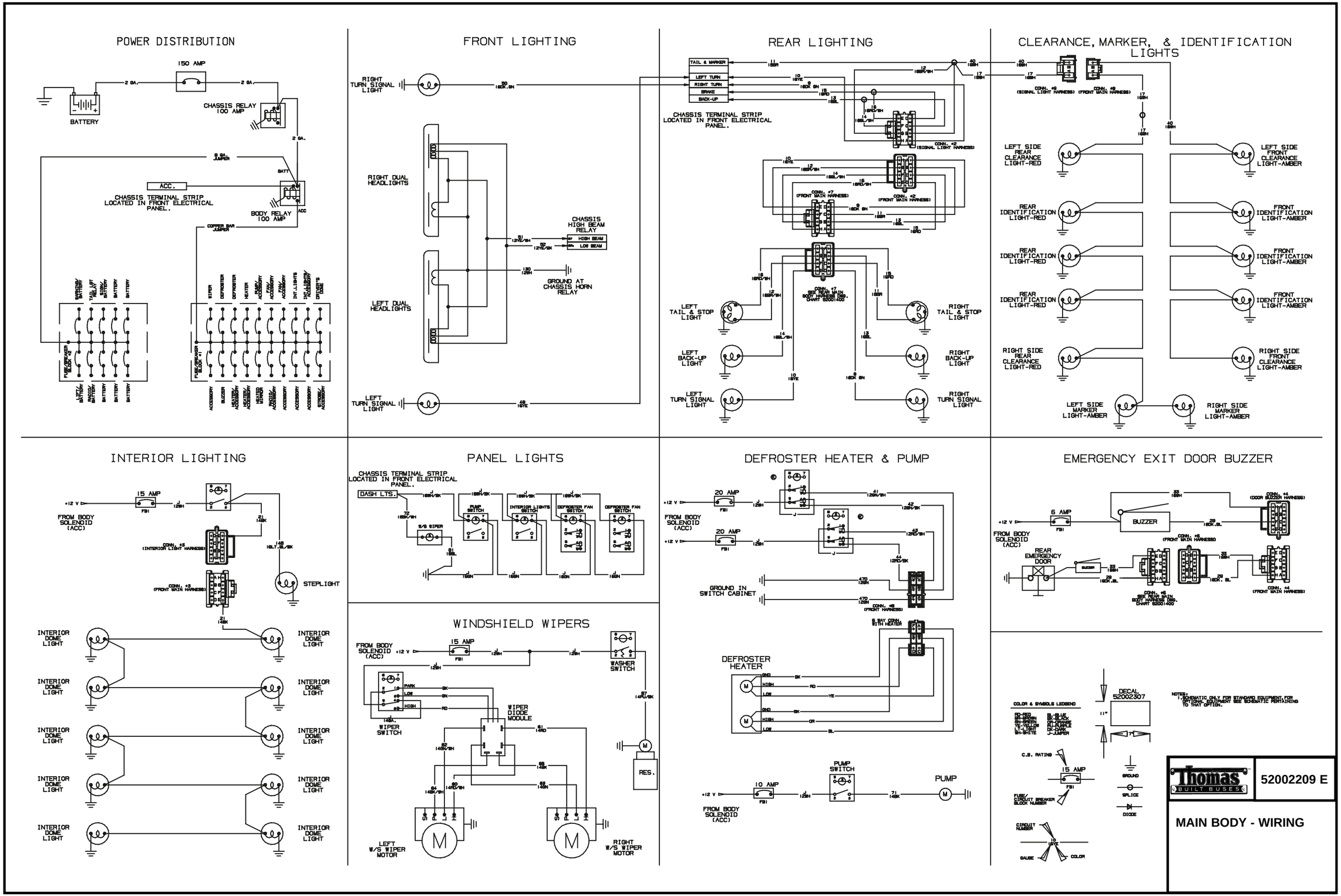
POWER DISTRIBUTION
150 AMP
BATTERY
CHASSIS RELAY 100 AMP
CHASSIS TERMINAL STRIP LOCATED IN FRONT ELECTRICAL PANEL.
ACC.
BODY RELAY 100 AMP
FRONT LIGHTING
RIGHT TURN SIGNAL LIGHT
RIGHT DUAL HEADLIGHTS
LEFT DUAL HEADLIGHTS
CHASSIS HIGH BEAM RELAY
HIGH BEAM
LOW BEAM
GROUND AT CHASSIS HORN RELAY
LEFT TURN SIGNAL LIGHT
REAR LIGHTING
TAIL & MARKER
LEFT TURN
RIGHT TURN
BRAKE
BACK-UP
CHASSIS TERMINAL STRIP LOCATED IN FRONT ELECTRICAL PANEL.
LEFT TAIL & STOP LIGHT
RIGHT TAIL & STOP LIGHT
LEFT BACK-UP LIGHT
RIGHT BACK-UP LIGHT
LEFT TURN SIGNAL LIGHT
RIGHT TURN SIGNAL LIGHT
CLEARANCE, MARKER, & IDENTIFICATION LIGHTS
LEFT SIDE REAR CLEARANCE LIGHT-RED
REAR IDENTIFICATION LIGHT-RED
REAR IDENTIFICATION LIGHT-RED
REAR IDENTIFICATION LIGHT-RED
RIGHT SIDE REAR CLEARANCE LIGHT-RED
LEFT SIDE FRONT CLEARANCE LIGHT-AMBER
FRONT IDENTIFICATION LIGHT-AMBER
FRONT IDENTIFICATION LIGHT-AMBER
FRONT IDENTIFICATION LIGHT-AMBER
RIGHT SIDE FRONT CLEARANCE LIGHT-AMBER
LEFT SIDE MARKER LIGHT-AMBER
RIGHT SIDE MARKER LIGHT-AMBER
INTERIOR LIGHTING
15 AMP
FROM BODY SOLENOID (ACC)
STEPLIGHT
INTERIOR DOME LIGHT
PANEL LIGHTS
CHASSIS TERMINAL STRIP LOCATED IN FRONT ELECTRICAL PANEL.
DASH LTS.
PUMP SWITCH
INTERIOR LIGHTS SWITCH
DEFROSTER FAN SWITCH
WINDSHIELD WIPERS
FROM BODY SOLENOID (ACC)
WASHER SWITCH
WIPER SWITCH
WIPER DIODE MODULE
RES.
LEFT W/S WIPER MOTOR
RIGHT W/S WIPER MOTOR
DEFROSTER HEATER & PUMP
20 AMP
GROUND IN SWITCH CABINET
DEFROSTER HEATER
10 AMP
PUMP SWITCH
PUMP
EMERGENCY EXIT DOOR BUZZER
6 AMP
BUZZER
REAR EMERGENCY DOOR
COLOR & SYMBOLS LEGEND
DECAL 52002307
NOTES:
1-SCHEMATIC ONLY FOR STANDARD EQUIPMENT.FOR OPTIONAL EQUIPMENT SEE SCHEMATIC PERTAINING TO THAT OPTION.
C.B. RATING
FUSE/ CIRCUIT BREAKER BLOCK NUMBER
CIRCUIT NUMBER
GAUGE
COLOR
GROUND
SPLICE
DIODE
Thomas BUILT BUSES
52002209 E
MAIN BODY - WIRING

MVP-ER
LIGHTS
SCHEMATICS

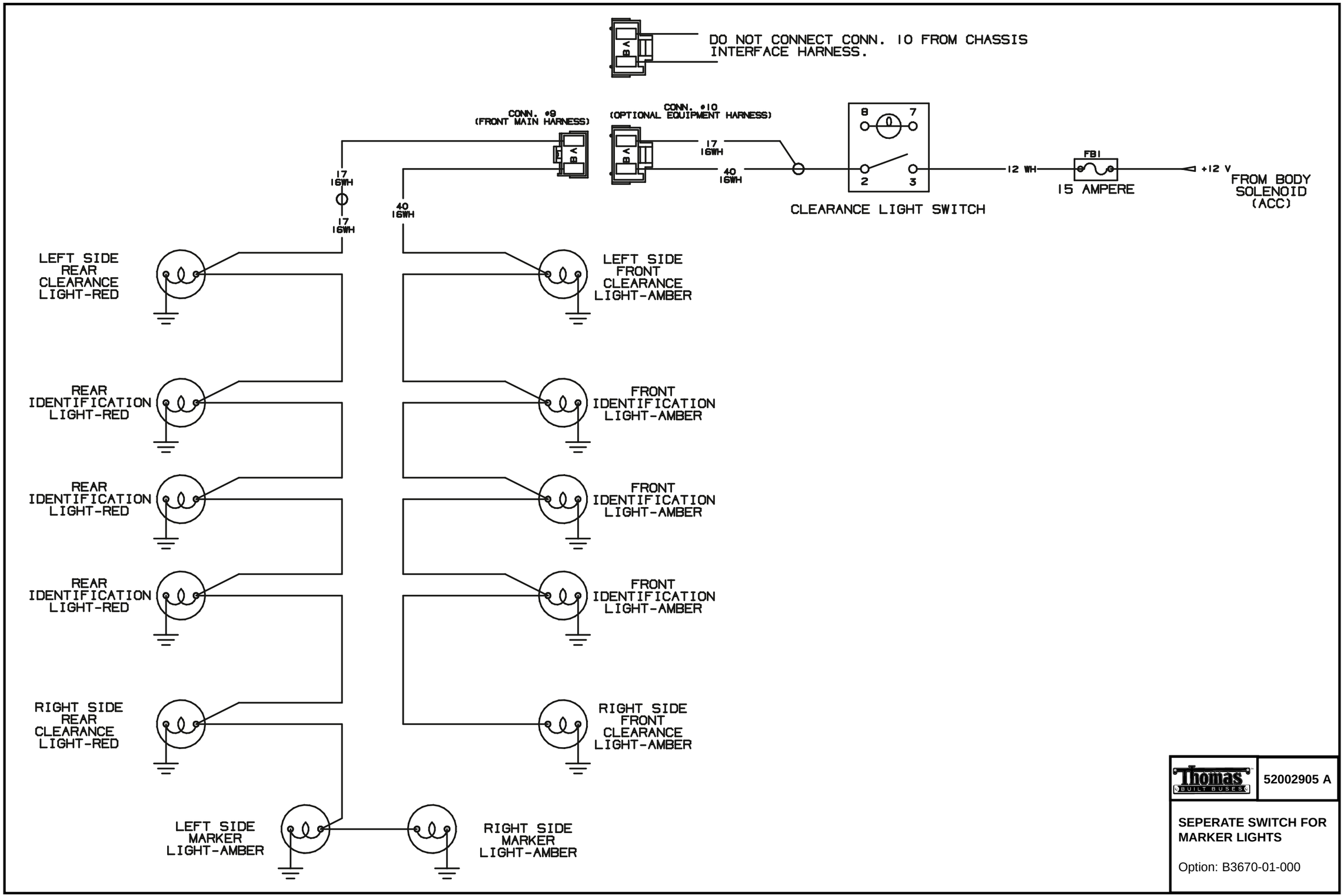
DO NOT CONNECT CONN. 10 FROM CHASSIS INTERFACE HARNESS.
CONN. #9 (FRONT MAIN HARNESS)
CONN. #10 (OPTIONAL EQUIPMENT HARNESS)
17 16WH
40 16WH
CLEARANCE LIGHT SWITCH
12 WH
FB1
15 AMPERE
+12 V
FROM BODY SOLENOID (ACC)
LEFT SIDE REAR CLEARANCE LIGHT-RED
LEFT SIDE FRONT CLEARANCE LIGHT-AMBER
REAR IDENTIFICATION LIGHT-RED
FRONT IDENTIFICATION LIGHT-AMBER
REAR IDENTIFICATION LIGHT-RED
FRONT IDENTIFICATION LIGHT-AMBER
REAR IDENTIFICATION LIGHT-RED
FRONT IDENTIFICATION LIGHT-AMBER
RIGHT SIDE REAR CLEARANCE LIGHT-RED
RIGHT SIDE FRONT CLEARANCE LIGHT-AMBER
LEFT SIDE MARKER LIGHT-AMBER
RIGHT SIDE MARKER LIGHT-AMBER
Thomas BUILT BUSES
52002905 A
SEPERATE SWITCH FOR MARKER LIGHTS
Option: B3670-01-000

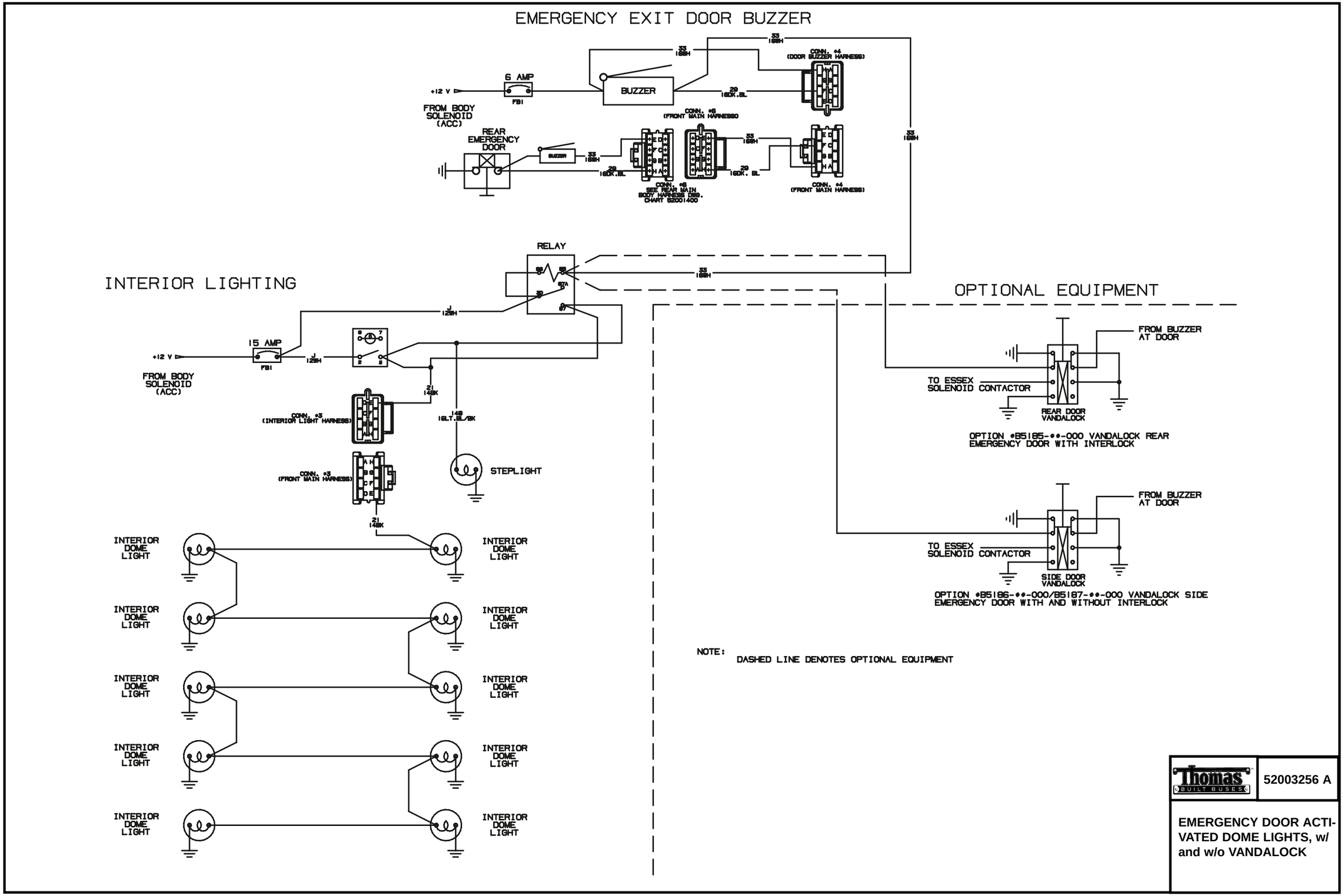
EMERGENCY EXIT DOOR BUZZER
6 AMP
FB1
+12 V
FROM BODY SOLENOID (ACC)
BUZZER
CONN. #4 (DOOR BUZZER HARNESS)
CONN. #6 (FRONT MAIN HARNESS)
REAR EMERGENCY DOOR
CONN. #6 SEE REAR MAIN BODY HARNESS DWG. CHART 52001400
CONN. #4 (FRONT MAIN HARNESS)
INTERIOR LIGHTING
RELAY
15 AMP
FB1
+12 V
FROM BODY SOLENOID (ACC)
CONN. #3 (INTERIOR LIGHT HARNESS)
CONN. #3 (FRONT MAIN HARNESS)
STEPLIGHT
INTERIOR DOME LIGHT
OPTIONAL EQUIPMENT
FROM BUZZER AT DOOR
TO ESSEX SOLENOID CONTACTOR
REAR DOOR VANDALOCK
OPTION #85185-##-000 VANDALOCK REAR EMERGENCY DOOR WITH INTERLOCK
FROM BUZZER AT DOOR
TO ESSEX SOLENOID CONTACTOR
SIDE DOOR VANDALOCK
OPTION #85186-##-000/85187-##-000 VANDALOCK SIDE EMERGENCY DOOR WITH AND WITHOUT INTERLOCK
NOTE:
DASHED LINE DENOTES OPTIONAL EQUIPMENT
Thomas BUILT BUSES
52003256 A
EMERGENCY DOOR ACTI-VATED DOME LIGHTS, w/ and w/o VANDALOCK

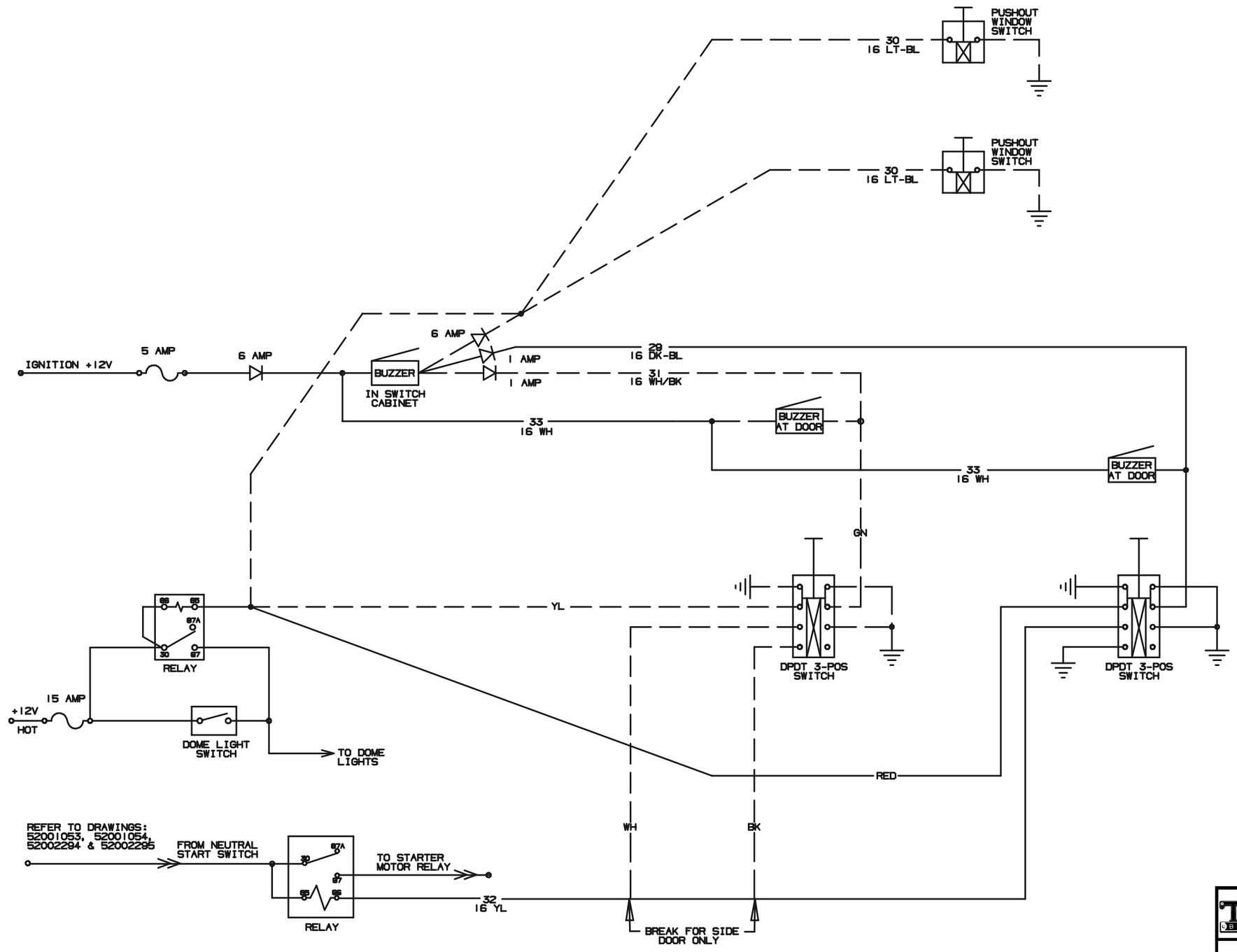

NOTE:
DASHED LINE DENOTES OPTIONAL EQUIPMENT.

Thomas BUILT BUSES

52002281 B

OPENING ACTIVATED DOME LIGHTS w/VANDALOCK

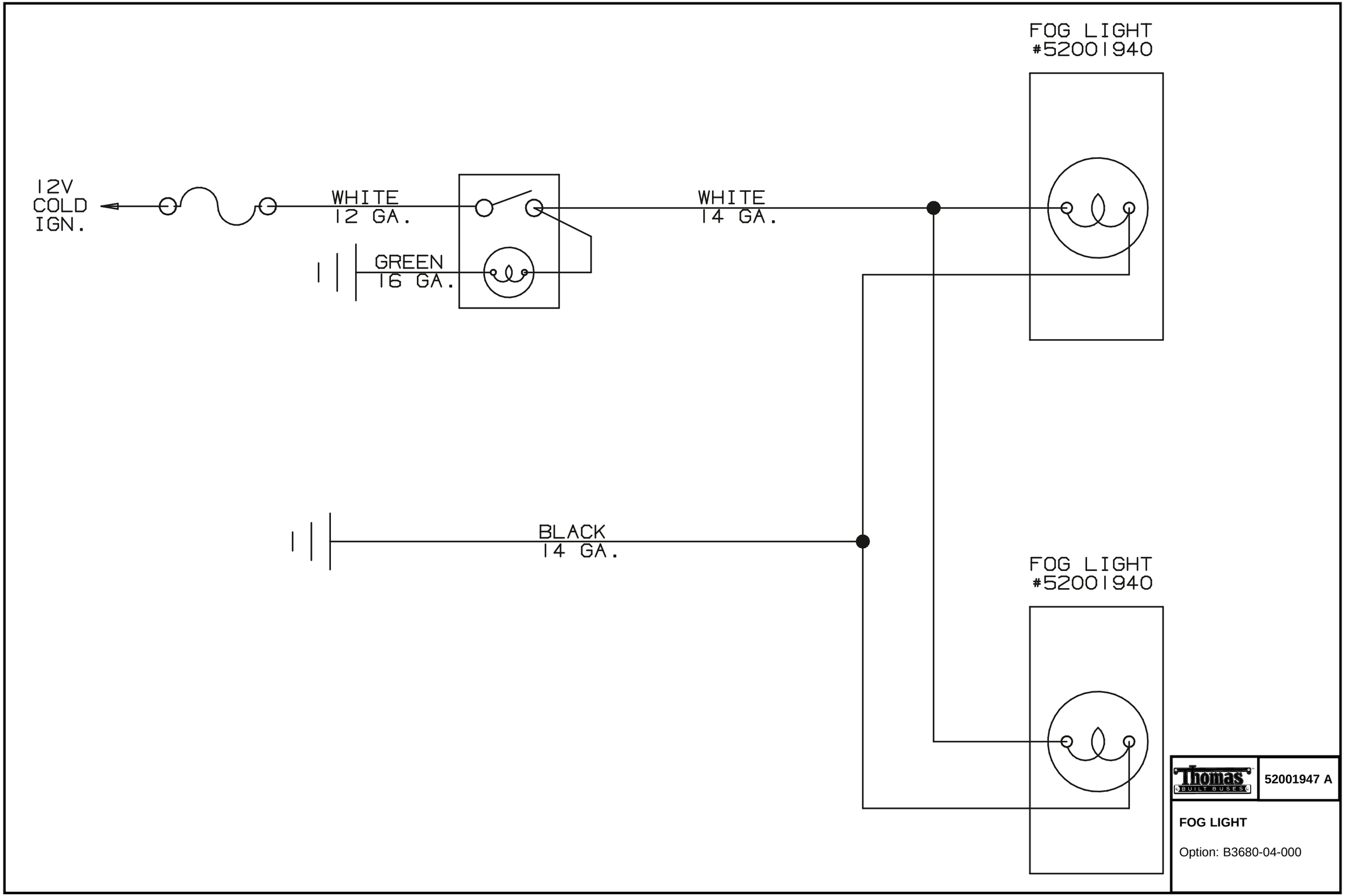
FOG LIGHT
#52001940
12V
COLD
IGN.
WHITE
12 GA.
WHITE
14 GA.
GREEN
16 GA.
BLACK
14 GA.
FOG LIGHT
#52001940
Thomas
BUILT BUSES
52001947 A
FOG LIGHT
Option: B3680-04-000

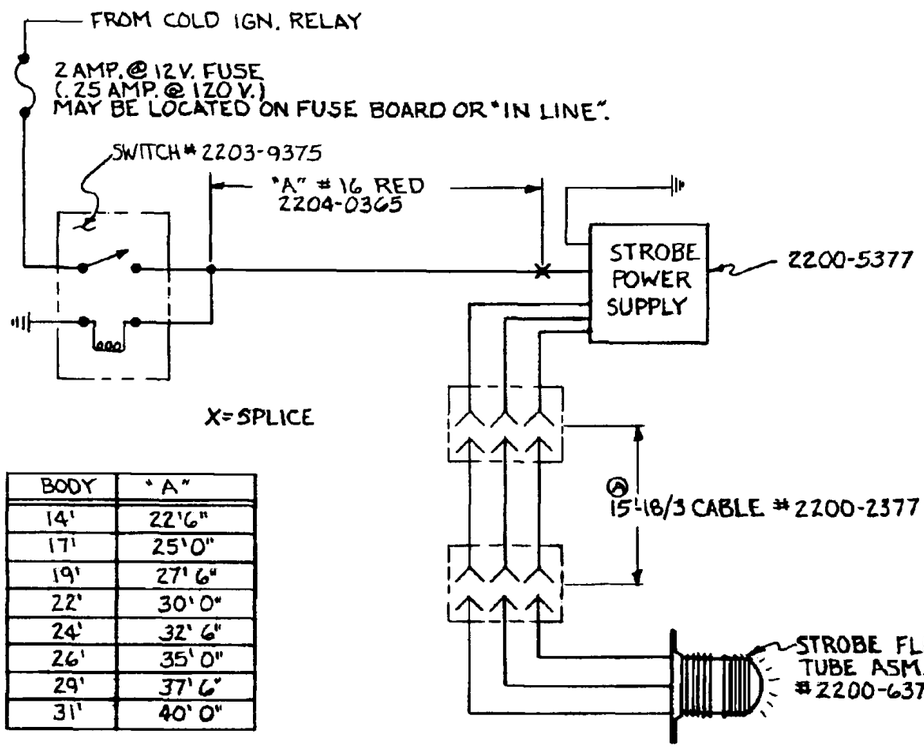

BODY	"A"
14'	22'6"
17'	25'0"
19'	27'6"
22'	30'0"
24'	32'6"
26'	35'0"
29'	37'6"
31'	40'0"

2200-3377 = KIT (2200-2371, 2200-5377, & 2200-6377)

2200-7377 - REPLACEMENT FLASH TUBE FOR ABOVE KIT.

MATERIALS:

QTY.	PART #	TITLE
1 Ea.	2200-3377	Model SS 206 Aero Flash 166-0061 Strobe (lo profile)
35'	2204-0365	Wire - #16 ga. red (2' for center roof option)
1 Ea.	2203-9375	Switch - spst w/ red pilot
1 Ea.	2003-9376	Label - SW, "strobe light"
2 Ea.	N/A	Jumper - 10" #16
1 Ea.	N/A	Jumper - 3" #16
2 Ea.	2202-0369	Terminal - Flange, 16-14 Wire
4 Ea.	2202-1365	Terminal - Female Snap on 16 - 14 Wire
1 Ea.	2202-3376	Connector - Pigtail, Nylon, NC 1610
1 Ea.	2207-1376	Holder - Fuse, "in-line"
1 Ea.	2200-4377	Fuse - 2 amp
6 Ea.	2992-0003	Screw - #10 Truss H D, C.R. (S.T.)
13"	2800-1373	Inmont Sealer, Blk. tape

INSTALLATION: OPTION # B3710-01-000 (Rear Roof)

1. The switch is to be mounted in the switch cabinet as close as practical to the warning light switches & labeled.

2. It is to be fed hot from the cold side of the ign. relay. It is to be fed thru an "in-line" fuse holder w/ a 2 amp. fuse (could be ½ amp. at 120V). The switch pilot light is to be fed from the cold side of the switch & grounded in the switch cabinet.

3. The red #16 Ga. wire is to be run from the cold side of the switch to the approx. center of the rear header along the conv. wiring route.

4. The D.C. power supply is to be located on the flange of the rear header. The black wire from the power supply is to be grounded to the rear header under the power supply case flange. 2 #10 screws are to be used to secure the power supply. The red wire is to be butt spliced to the red wire from the power supply.

5. The #18/3 shielded cable is to be run from the power supply to the position shown for the strobe tube assembly on drawing #2206-8376.

6. The strobe tube asm. is to be located as shown on the above mentioned drawing. A 1" dia. hole will be required to bring wiring thru the roof sheet. The flange of the strobe tube asm. is to be caulked w/ a suitable sealer such as Inmont Sealer Tape. The strobe tube asm. is to be secured w/ 4# 10 tapping screws.

For wiring diagram refer to drawing #2200-1377.

Installation: Option # B3701-00-000 (Center Roof) (B)

All instructions are same as above except Items #3 & 4 should read as follows:

3. The red #16 gage wire is to run from the cold side of the switch to the power supply.

4. The power supply is to be located in switch cabinet & secured using (2) #10 screws. The red wire from the switch is to be "butt" spliced to the red wire from power supply.

MATERIALS:

QTY.	PART #	TITLE
1 Ea.	2203-9375	Switch - SPST w/red pilot
1 Ea.	2203-9376	Label - SW "strobe light"
35'	2204-0365	Wire - #16 ga. red
2 Ea.	N/A	Jumper - 10", #16
1 Ea	N/A	Jumper - 3", #16
2 Ea.	2202-0369	Terminal - Flange, 16 - 14 wire
4 Ea.	2202-1365	Terminal - Female, snap-on, 16-14
1 Ea.	2207-1376	Holder - Fuse, "in-line"
1 Ea.	2200-4377	Fuse - 2 Amp.
1 Ea.	2200-2377	Cable - 1813 Shielded, W/plubs

Thomas BUILT BUSES

22001377 B

STROBE LIGHT

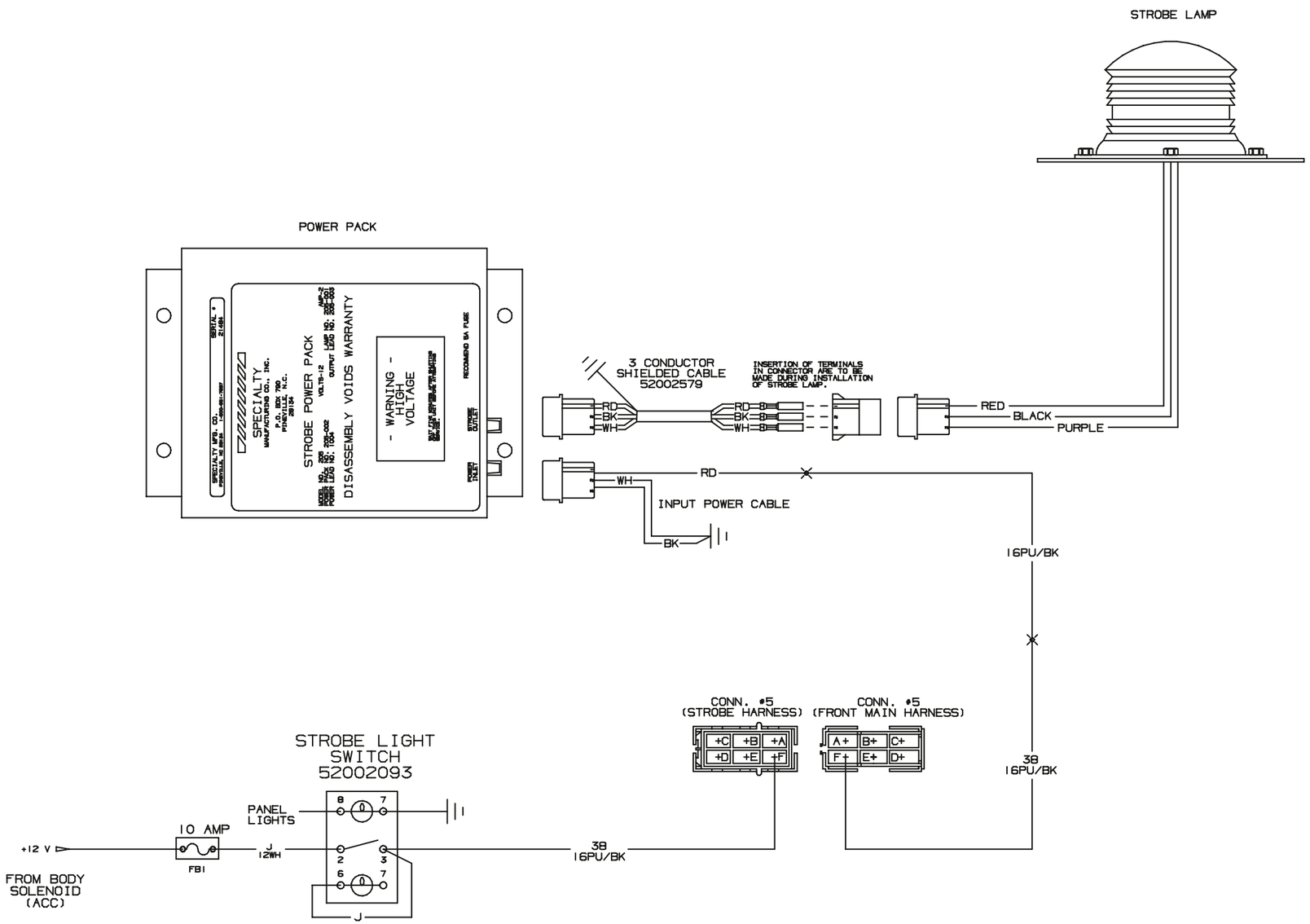

NOTES:
1.POWER PACK, STROBE LAMP, INPUT POWER CABLE, AND AMP CONNECTOR ARE PART OF KIT #52002574.

Thomas BUILT BUSES

52002582 A

STROBE LIGHT, ROOF MOUNTED, SPECIALTY MODEL #205-202

NOTES:
1. POWER PACK, STROBE LAMP, INPUT POWER CABLE, AND AMP CONNECTOR ARE PART OF KIT #52002574.

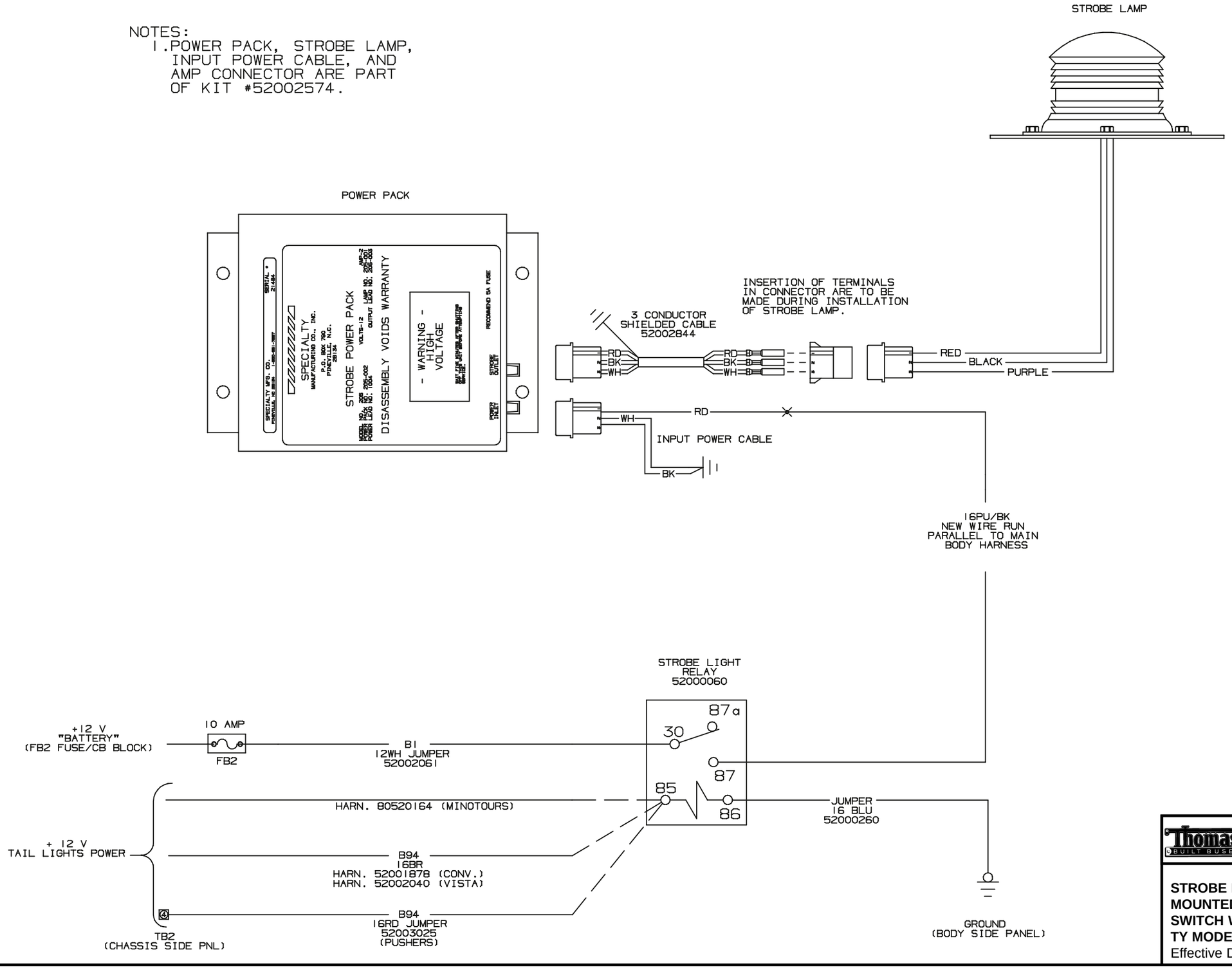

Thomas BUILT BUSES

52003000 A

STROBE LIGHT ROOF MOUNTED, HEADLIGHT SWITCH WIRED SPECIALTY MODEL #205-202

Effective Date: 01/21/99

NOTES:
1. POWER PACK, STROBE LAMP, INPUT POWER CABLE, AND AMP CONNECTOR ARE PART OF KIT #52003064.

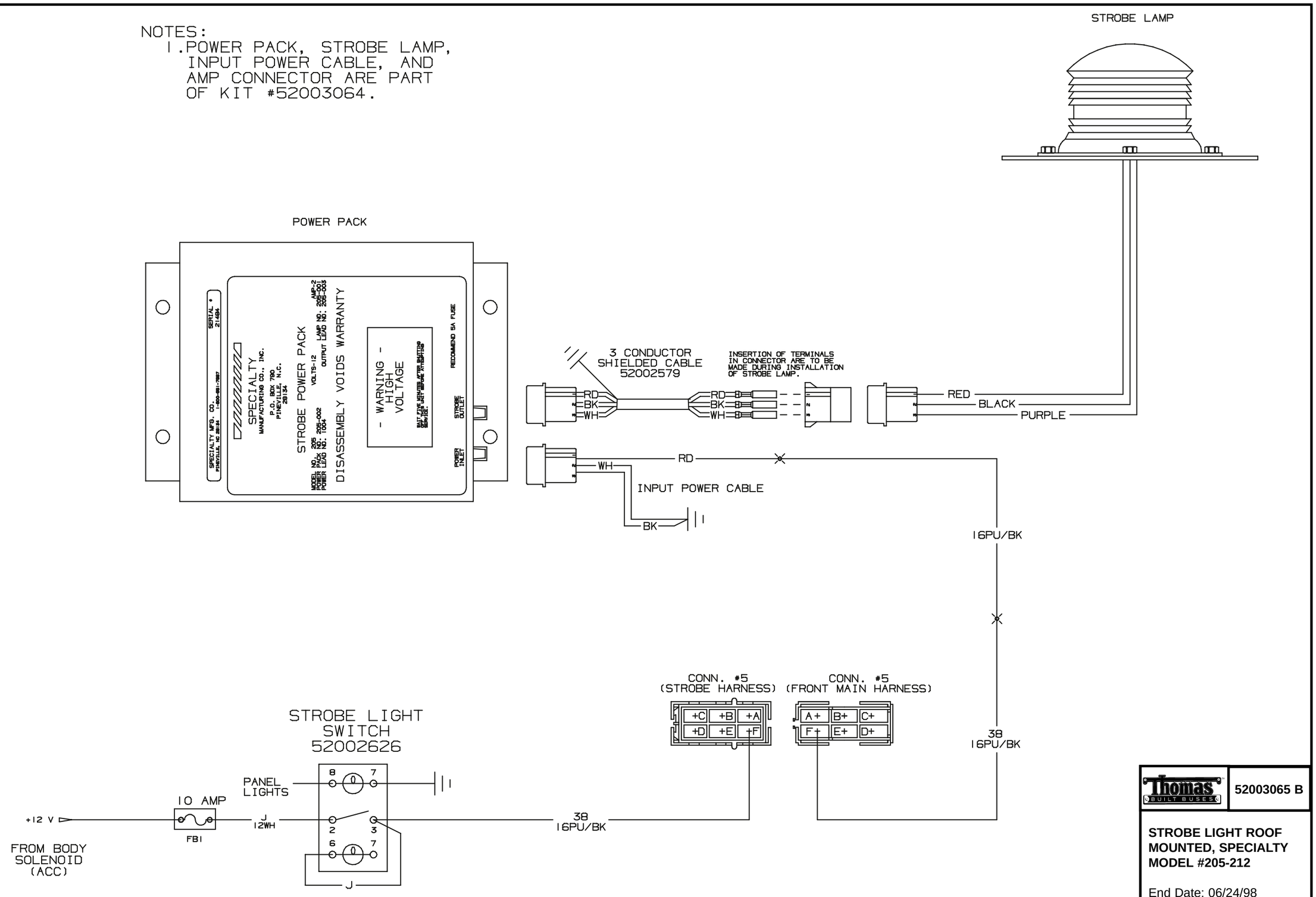

Thomas BUILT BUSES

52003065 B

STROBE LIGHT ROOF MOUNTED, SPECIALTY MODEL #205-212

End Date: 06/24/98

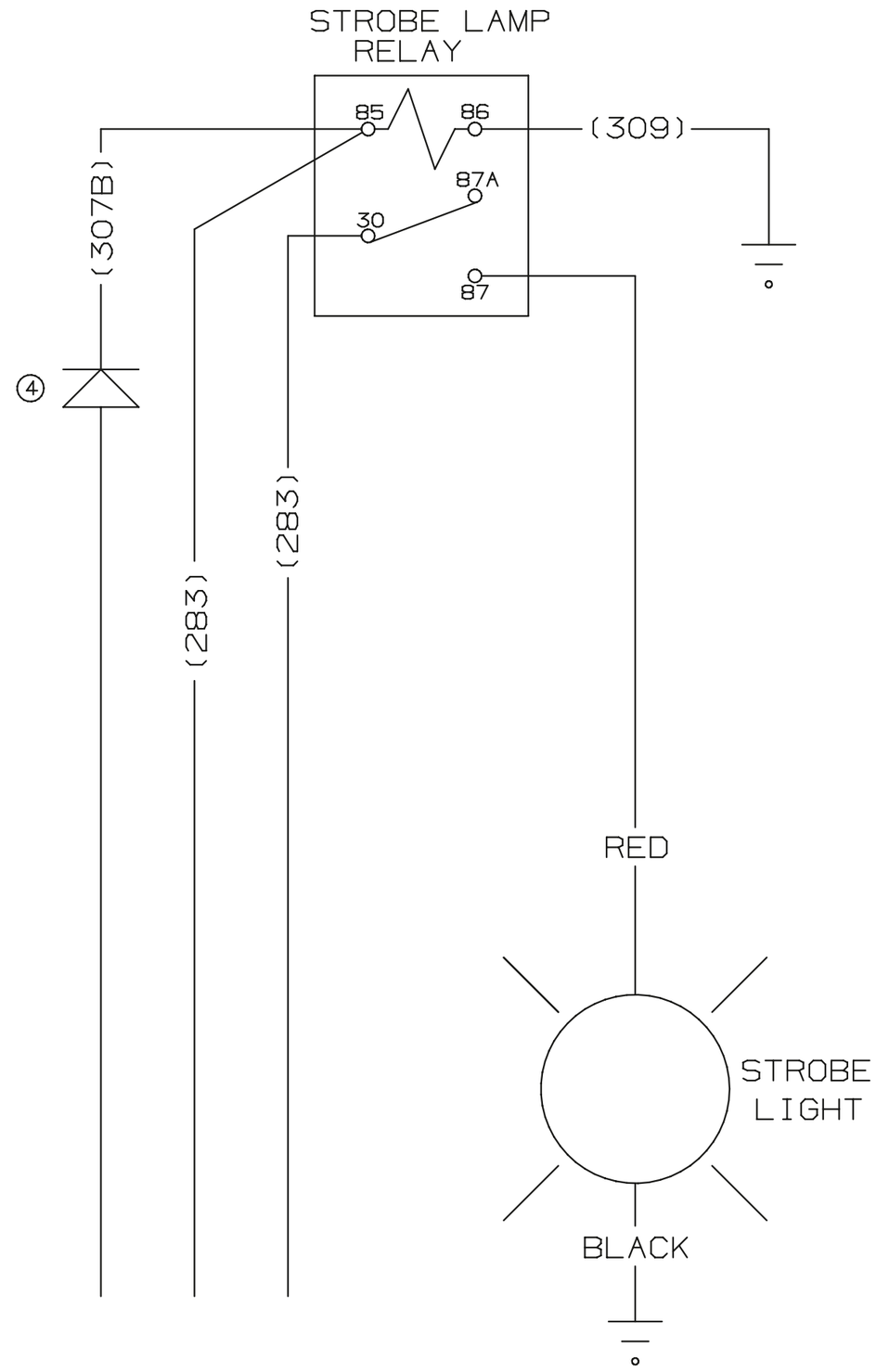

Thomas BUILT BUSES

52003154 A

STROBE LIGHT
MODEL #515-410

Effective Date: 06/25/98

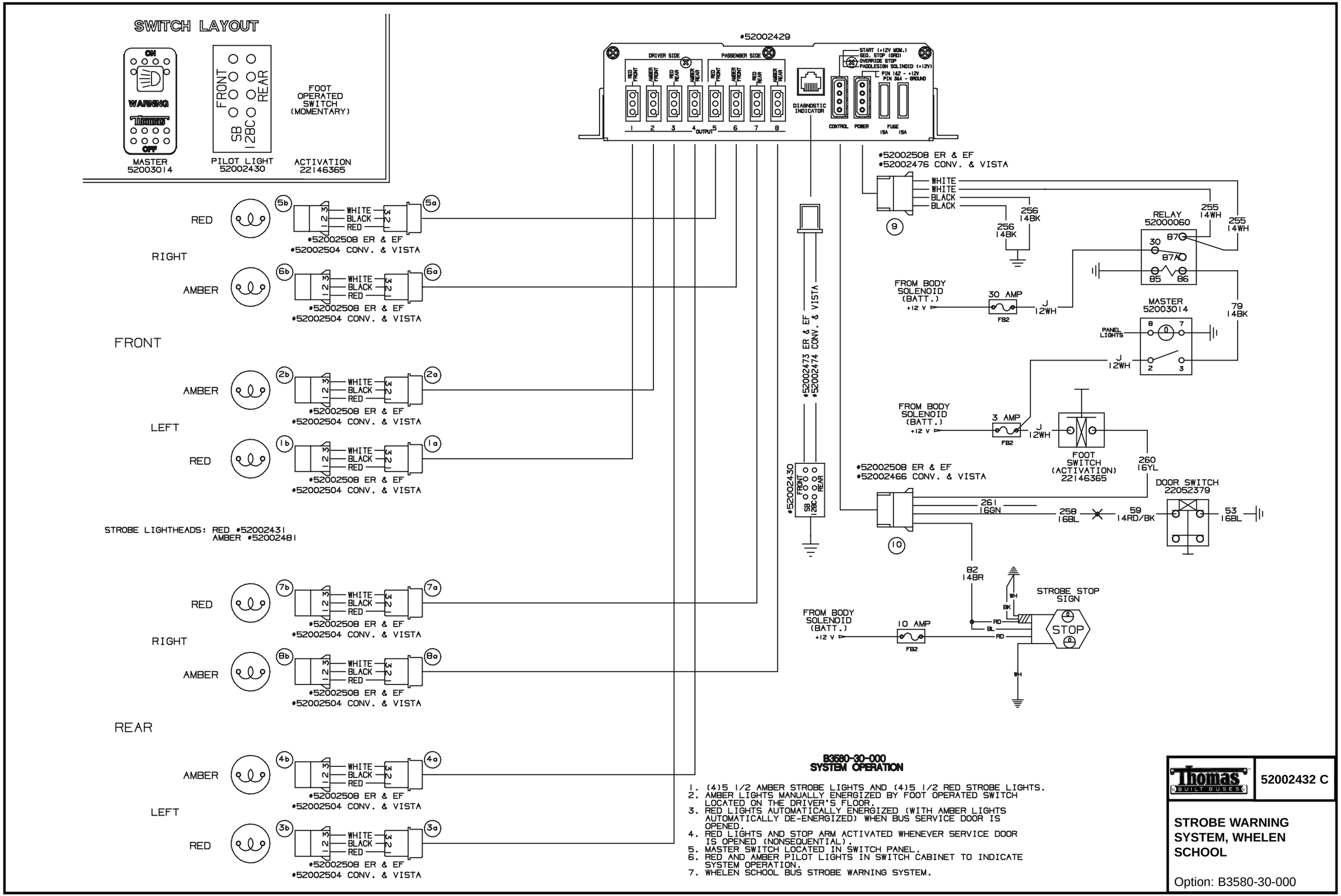

B3580-30-000
SYSTEM OPERATION

1. (4)5 1/2 AMBER STROBE LIGHTS AND (4)5 1/2 RED STROBE LIGHTS.
2. AMBER LIGHTS MANUALLY ENERGIZED BY FOOT OPERATED SWITCH LOCATED ON THE DRIVER'S FLOOR.
3. RED LIGHTS AUTOMATICALLY ENERGIZED (WITH AMBER LIGHTS AUTOMATICALLY DE-ENERGIZED) WHEN BUS SERVICE DOOR IS OPENED.
4. RED LIGHTS AND STOP ARM ACTIVATED WHENEVER SERVICE DOOR IS OPENED (NONSEQUENTIAL).
5. MASTER SWITCH LOCATED IN SWITCH PANEL.
6. RED AND AMBER PILOT LIGHTS IN SWITCH CABINET TO INDICATE SYSTEM OPERATION.
7. WHELEN SCHOOL BUS STROBE WARNING SYSTEM.

Thomas BUILT BUSES

52002432 C

STROBE WARNING SYSTEM, WHELEN SCHOOL

Option: B3580-30-000

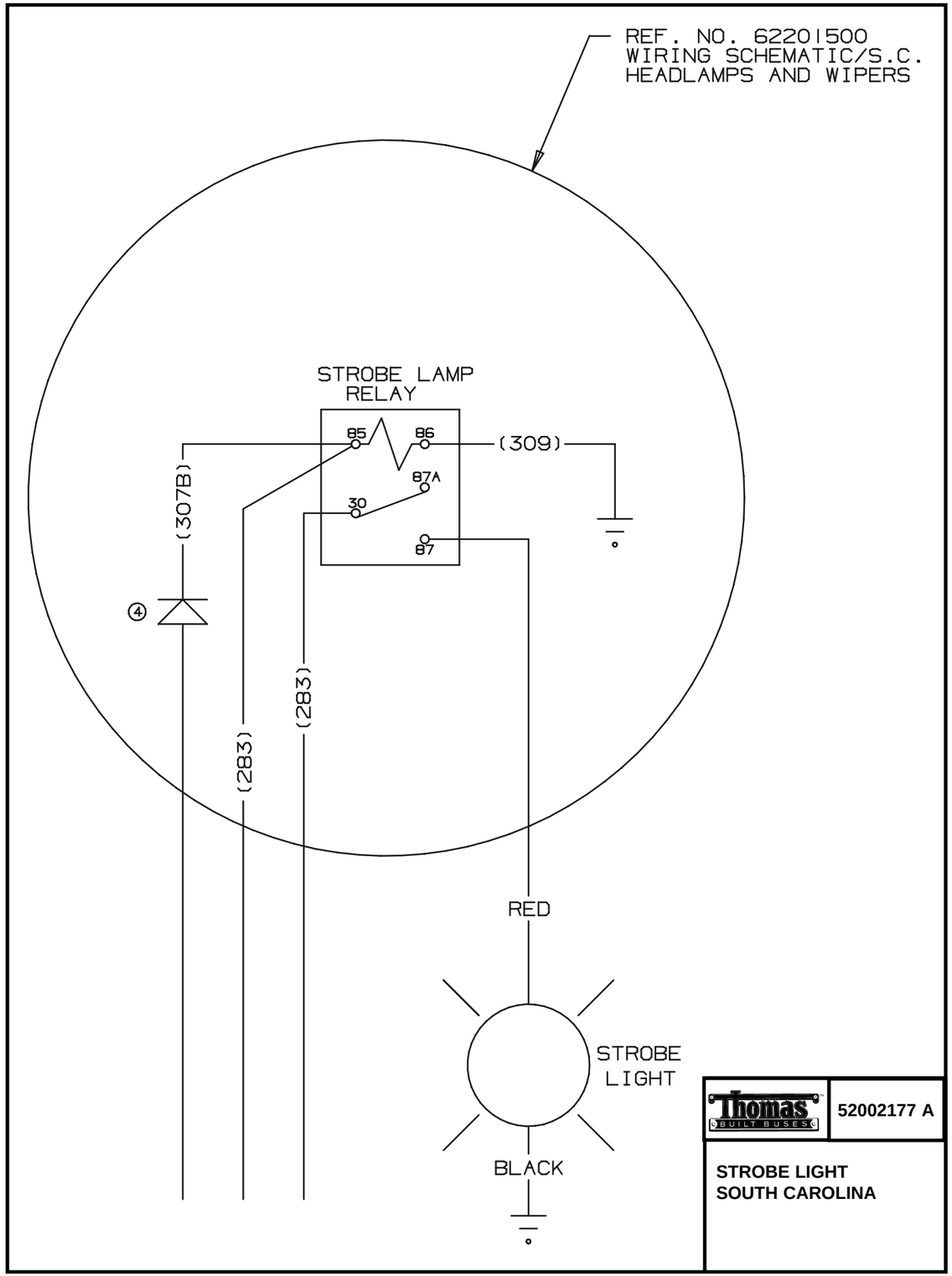
REF. NO. 62201500
WIRING SCHEMATIC/S.C.
HEADLAMPS AND WIPERS
STROBE LAMP
RELAY
85
86
87A
30
87
(309)
(307B)
4
(283)
(283)
RED
STROBE
LIGHT
BLACK
Thomas
BUILT BUSES
52002177 A
STROBE LIGHT
SOUTH CAROLINA

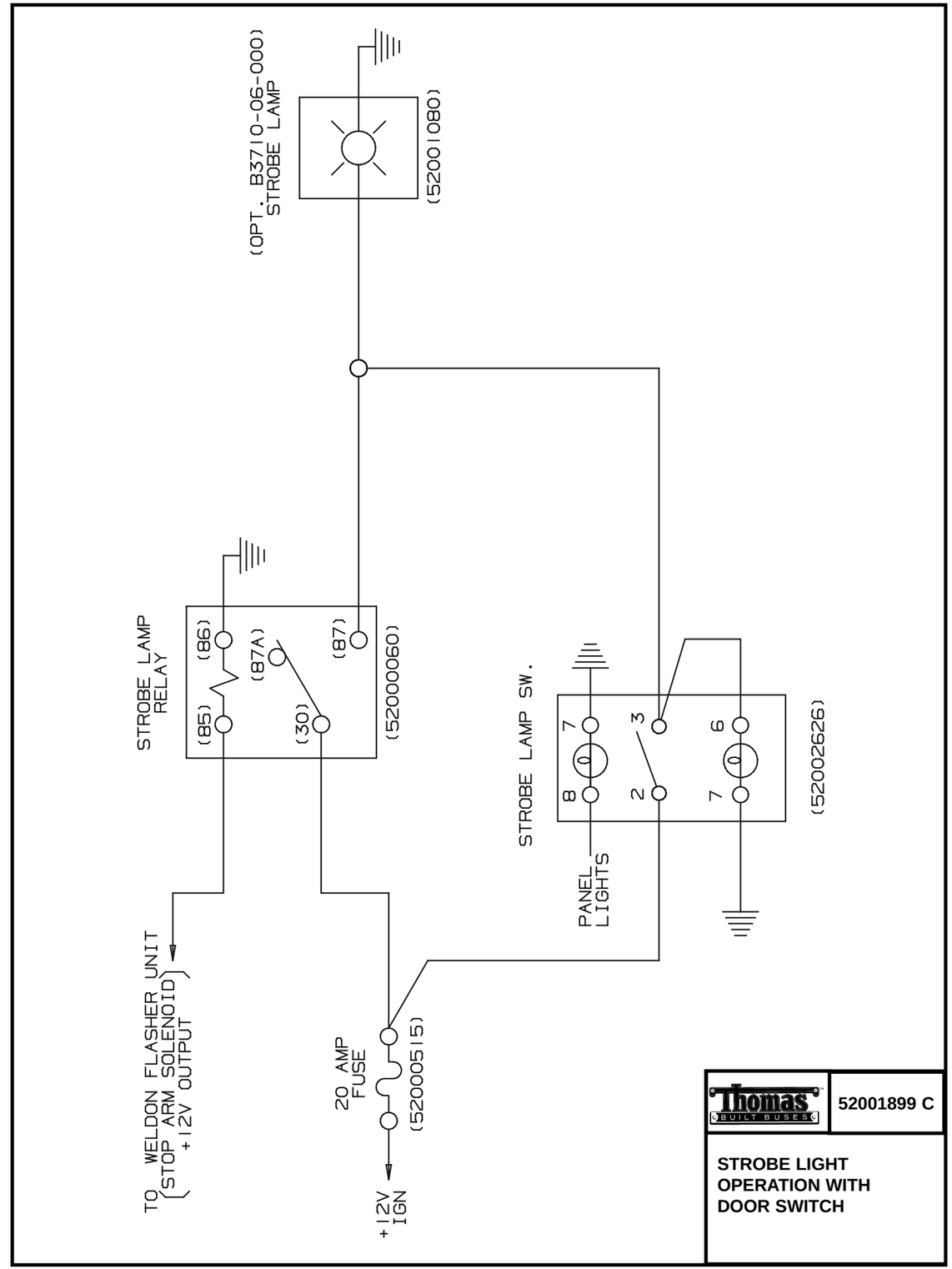
(OPT. B3710-06-000)
STROBE LAMP
(52001080)
STROBE LAMP
RELAY
(86)
(87A)
(87)
(85)
(30)
(52000060)
STROBE LAMP SW.
7
3
6
8
2
7
(52002626)
PANEL
LIGHTS
TO WELDON FLASHER UNIT
(STOP ARM SOLENOID)
+12V OUTPUT
20 AMP
FUSE
(52000515)
+12V
IGN
Thomas
BUILT BUSES
52001899 C
STROBE LIGHT
OPERATION WITH
DOOR SWITCH

SWITCH LAYOUT

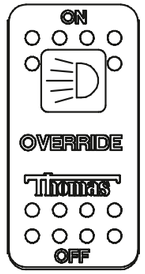

THIS SWITCH SHOULD BE LOCATED ON THE SWITCH PANEL.

OVERRIDE
52002641

OTHER SWITCHES PER WARNING SYSTEM OPTION. (SEE ORDER)

B3822-01-000
OPTION DESCRIPTION

1. ACTIVATION OF MOMENTARY "OVERRIDE" SWITCH WHEN AMBER LIGHTS HAVE BEEN ACTIVATED WILL ACTIVATE RED LIGHTS WITHOUT OPENING DOOR.
2. RED LIGHTS WILL BE DE-ACTIVATED WHEN DOOR IS CLOSED.
3. ALL FEATURES OF WARNING SYSTEM REMAIN UNCHANGED.

ITEM	PART NO.	DESCRIPTION	QTY
1	52002641	SWITCH - OVERRIDE	1
2	52000060	RELAY - SPDT, 30/20 AMP	1
3	(SEE CHART)	HARNESS - WIRING	1
4	52001817	SWITCH - STOPLIGHT, N.C.	1
5	22036377	SWITCH - STOPLIGHT, N.O.	REF

ITEM 5 IS PART OF THE WARNING SYSTEM OPTION.

MODEL	HARNESS
CONVENTIONAL	52002672
VISTA	52002673
FORWARD CONTROL ALL REAR ENGINE	52002674

ALL HARNESSES SHOWN ON DRAWING 52002695

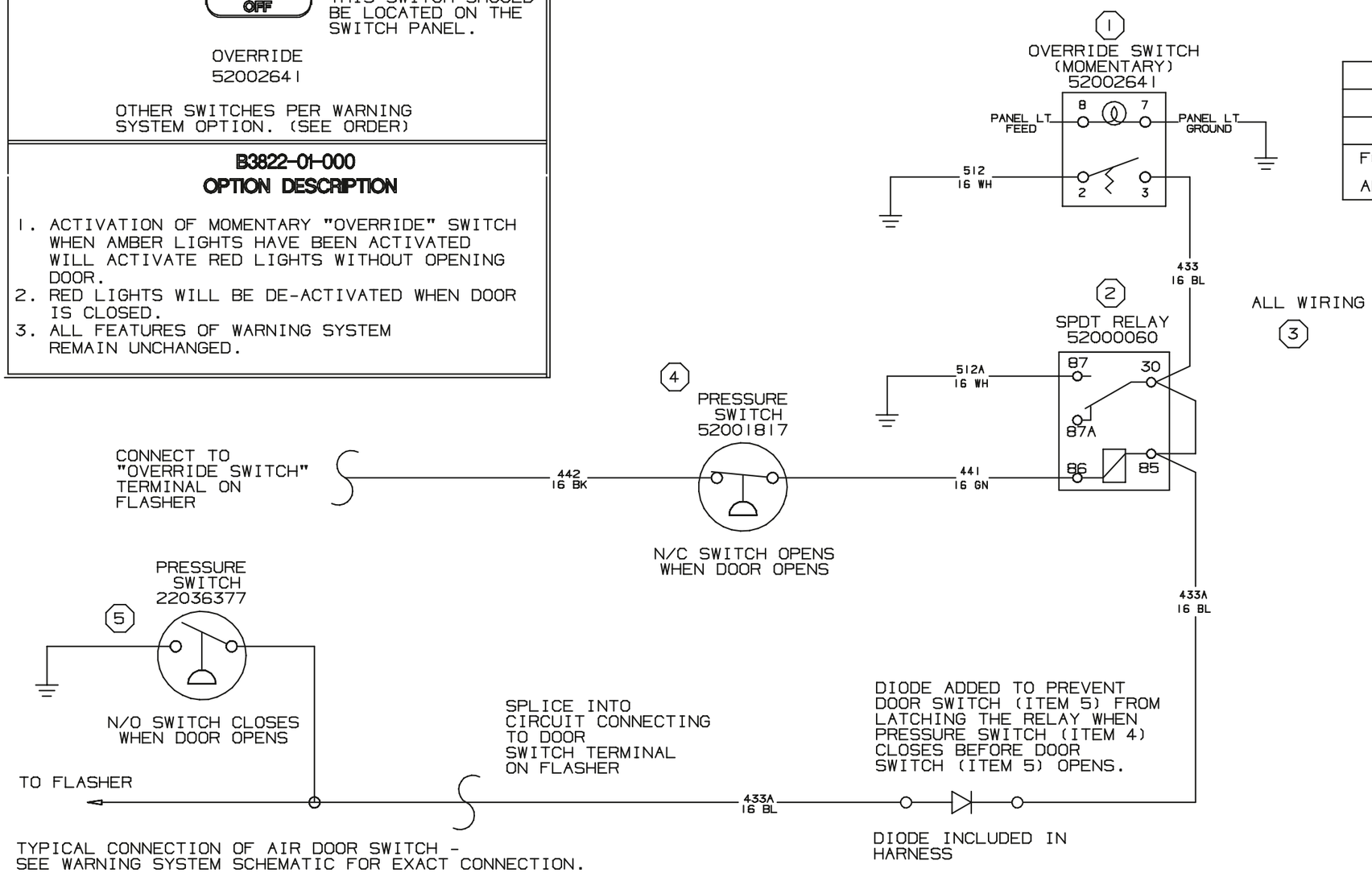

TYPICAL CONNECTION OF AIR DOOR SWITCH - SEE WARNING SYSTEM SCHEMATIC FOR EXACT CONNECTION.

COMPUTER ORIGINAL -- DO NOT MAKE MANUAL CHANGES

Thomas BUILT BUSES

52002670 C

RED WARNING LIGHT OVERRIDE SWITCH

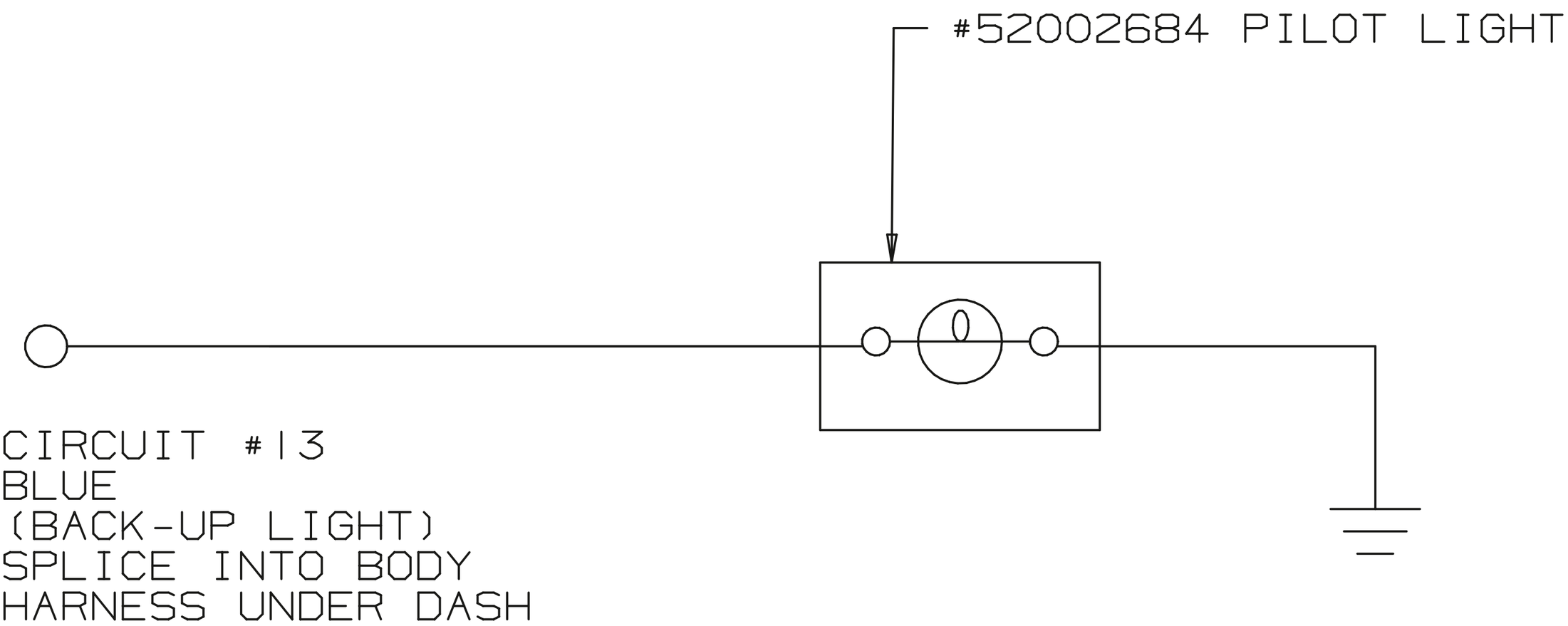

CIRCUIT #13
BLUE
(BACK-UP LIGHT)
SPLICE INTO BODY
HARNESS UNDER DASH

OPTION #B 3100-04-000

Thomas BUILT BUSES

52002710 A

PILOT LIGHT, GREEN,
"REVERSE GEAR"

MVP-ER
EIGHT LIGHT
WARNING SYSTEM
SCHEMATICS

SWITCH LAYOUT

MASTER 52003014 PILOT 52002131

B3540-10-000 SYSTEM OPERATION

1. FOUR 7" RED LIGHTS.
2. RED LIGHTS ACTIVATED BY A SWITCH LOCATED ON THE SWITCH PANEL.
3. RED PILOT LIGHT IN SWITCH PANEL TO INDICATE SYSTEM OPERATION.
4. STOP ARM ONLY ACTIVATED WHEN SERVICE DOOR IS OPEN AND WARNING LIGHTS ARE ON.
5. BADDER BROWN FLASHER

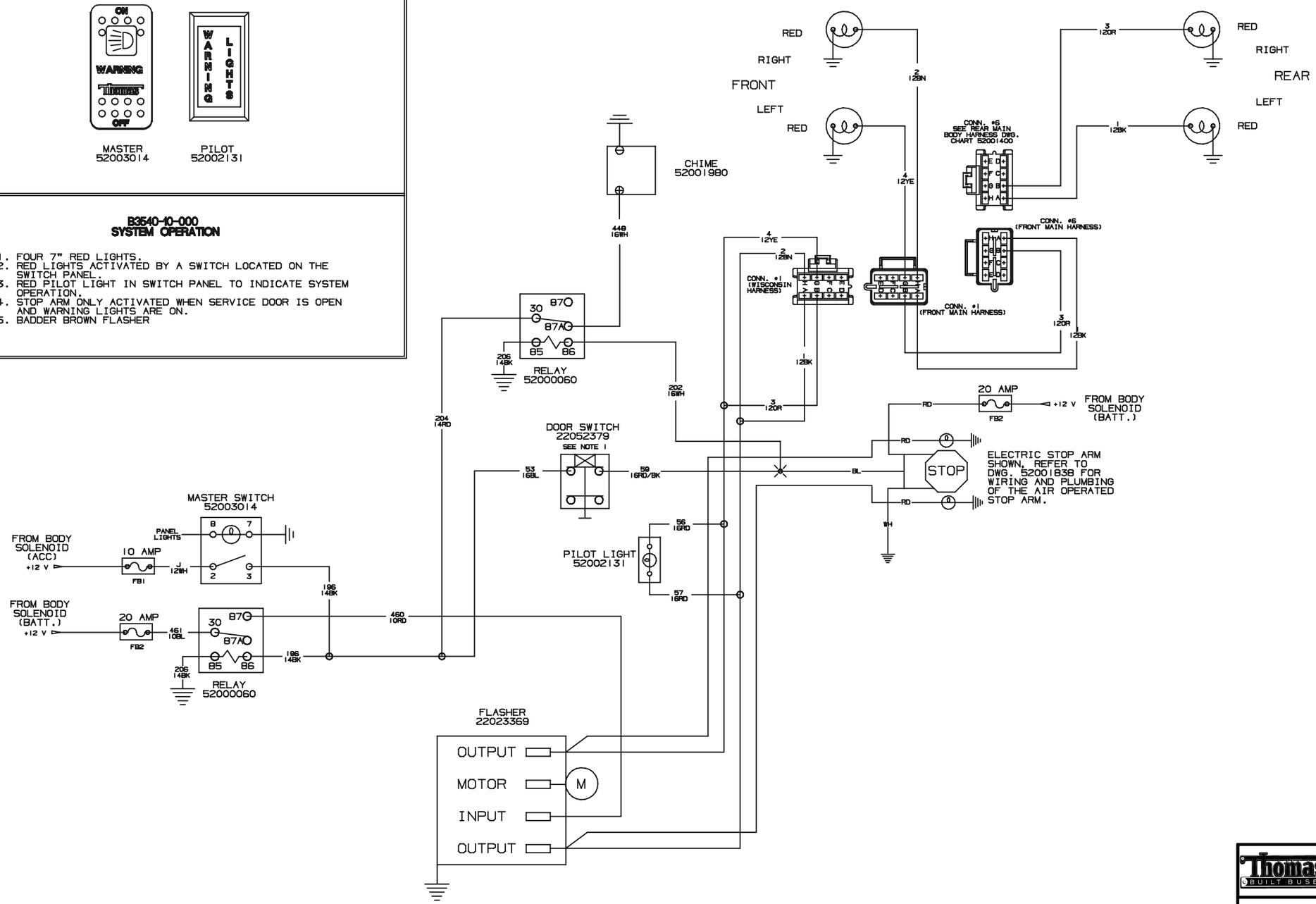

NOTES:
1. USE PRESSURE SWITCH 22036377 WHEN AIR SERVICE DOORS ARE ORDERED.
2. WIRING HARNESS 52002687 IS USED FOR WIRING IN THE SWITCH CABINET.

Thomas BUILT BUSES

52002723 C

FOUR LIGHT WARNING SYSTEM (WISCONSIN)

Option B3540-10-000

SWITCH LAYOUT

MASTER
52003014

PILOT
52002131

B3540-13-000
SYSTEM OPERATION

1. FOUR 7" RED LIGHTS.
2. TWO 7" COWL MOUNTED LIGHTS.
3. TWO 7" LIGHTS INCORPORATED IN THE REAR TURN SIGNALS.
4. RED LIGHTS ACTIVATED BY A SWITCH LOCATED ON THE SWITCH PANEL.
5. RED PILOT LIGHT IN SWITCH PANEL TO INDICATE SYSTEM OPERATION.
6. STOP ARM ONLY ACTIVATED WHEN SERVICE DOOR IS OPEN AND WARNING LIGHTS ARE ON.
7. ELS MODEL B-4 FLASHER.
8. MUST ALSO ORDER OPTION B3350-02-000 (DIRECTIONAL REAR).

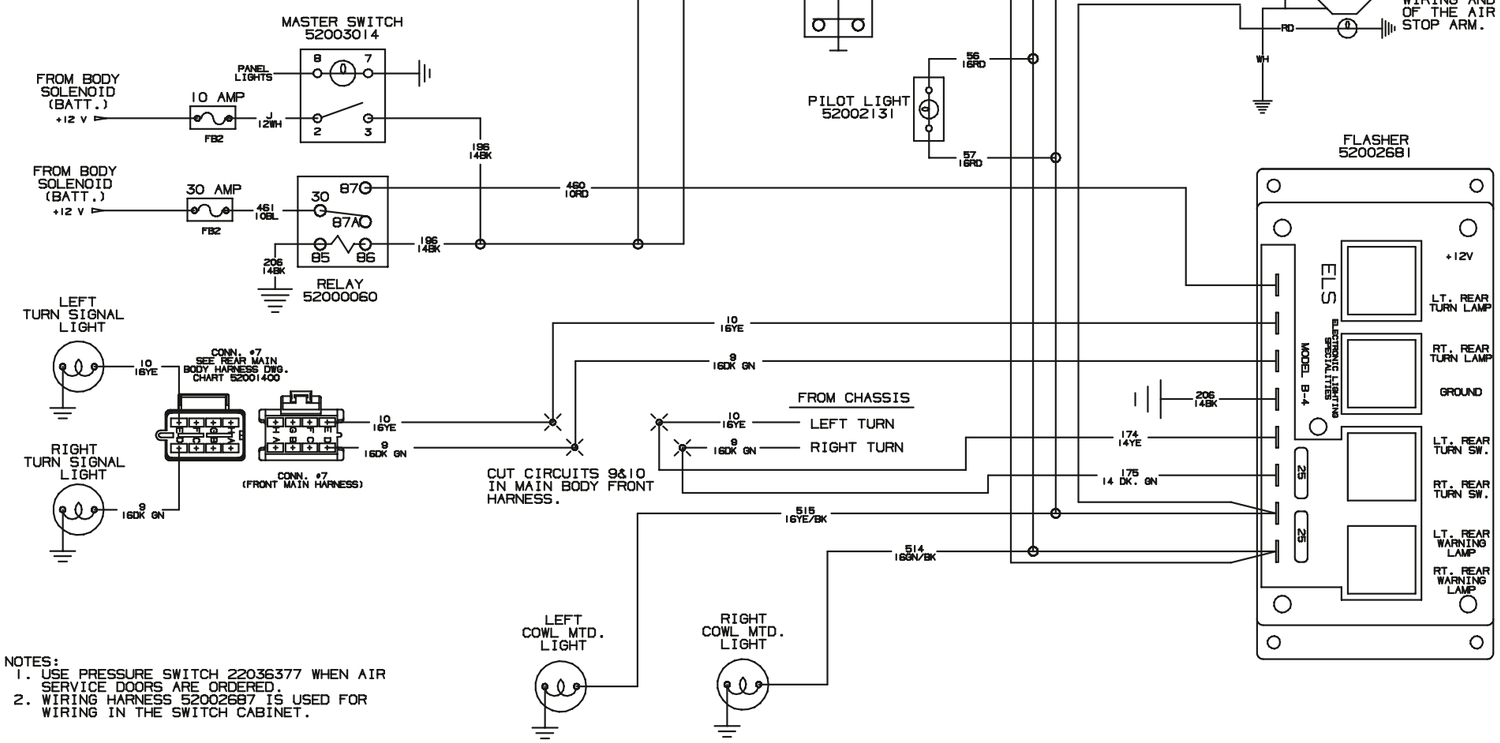

NOTES:
1. USE PRESSURE SWITCH 22036377 WHEN AIR SERVICE DOORS ARE ORDERED.
2. WIRING HARNESS 52002687 IS USED FOR WIRING IN THE SWITCH CABINET.

Thomas BUILT BUSES

52002682 C

FOUR LIGHT WARNING SYSTEM (WISCONSIN)

Option B3540-13-000

SWITCH LAYOUT

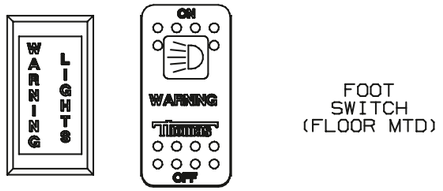

PILOT	MASTER	ACTIVATION
52002131	52003014	22146365

FOOT SWITCH (FLOOR MTD)

B3580-03-000 SYSTEM OPERATION

1. FOUR 7" AMBER LIGHTS AND FOUR 7" RED LIGHTS.
2. AMBER LIGHTS MANUALLY ENERGIZED BY FOOT OPERATED SWITCH LOCATED ON THE DRIVERS TOE BOARD.
3. RED LIGHTS AUTOMATICALLY ENERGIZED (WITH AMBER LIGHTS AUTOMATICALLY DE-ENERGIZED) WHEN BUS SERVICE DOOR IS OPENED.
4. RED LIGHTS AND STOP ARM ACTIVATED WHENEVER SERVICE DOOR IS OPENED (NONSEQUENTIAL).
5. RED PILOT LIGHT IN SWITCH CABINET TO INDICATE SYSTEM OPERATION.
6. WELDON 7000 ELECTRONIC FLASHER.

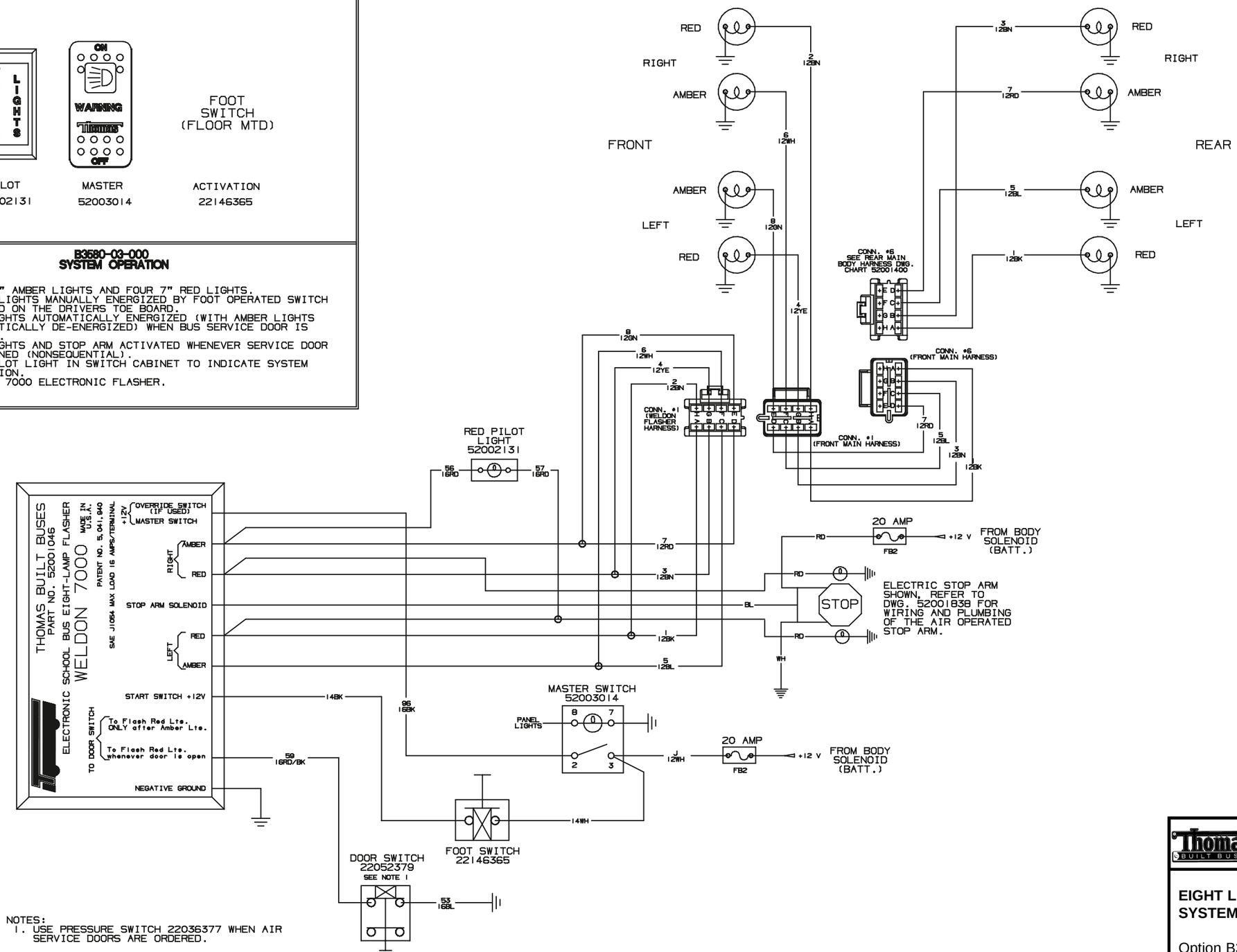

NOTES:
1. USE PRESSURE SWITCH 22036377 WHEN AIR SERVICE DOORS ARE ORDERED.

52002360 C

EIGHT LIGHT WARNING SYSTEM

Option B3580-03-000

SWITCH LAYOUT

PILOT
52002241

MASTER/
ACTIVATION
52003015

B3580-04-000
SYSTEM OPERATION

1. FOUR 7" AMBER LIGHTS AND FOUR 7" RED LIGHTS.
2. AMBER LIGHTS MANUALLY ENERGIZED BY ROCKER SWITCH LOCATED ON THE SWITCH PANEL.
3. RED LIGHTS AUTOMATICALLY ENERGIZED (WITH AMBER LIGHTS AUTOMATICALLY DE-ENERGIZED) WHEN BUS SERVICE DOOR IS OPENED.
4. RED LIGHTS AND STOP ARM ACTIVATED WHENEVER SERVICE DOOR IS OPENED (NONSEQUENTIAL).
5. MASTER SWITCH LOCATED IN SWITCH PANEL.
6. RED AND AMBER PILOT LIGHT IN SWITCH CABINET TO INDICATE SYSTEM OPERATION.
7. WELDON 7000 ELECTRONIC FLASHER.

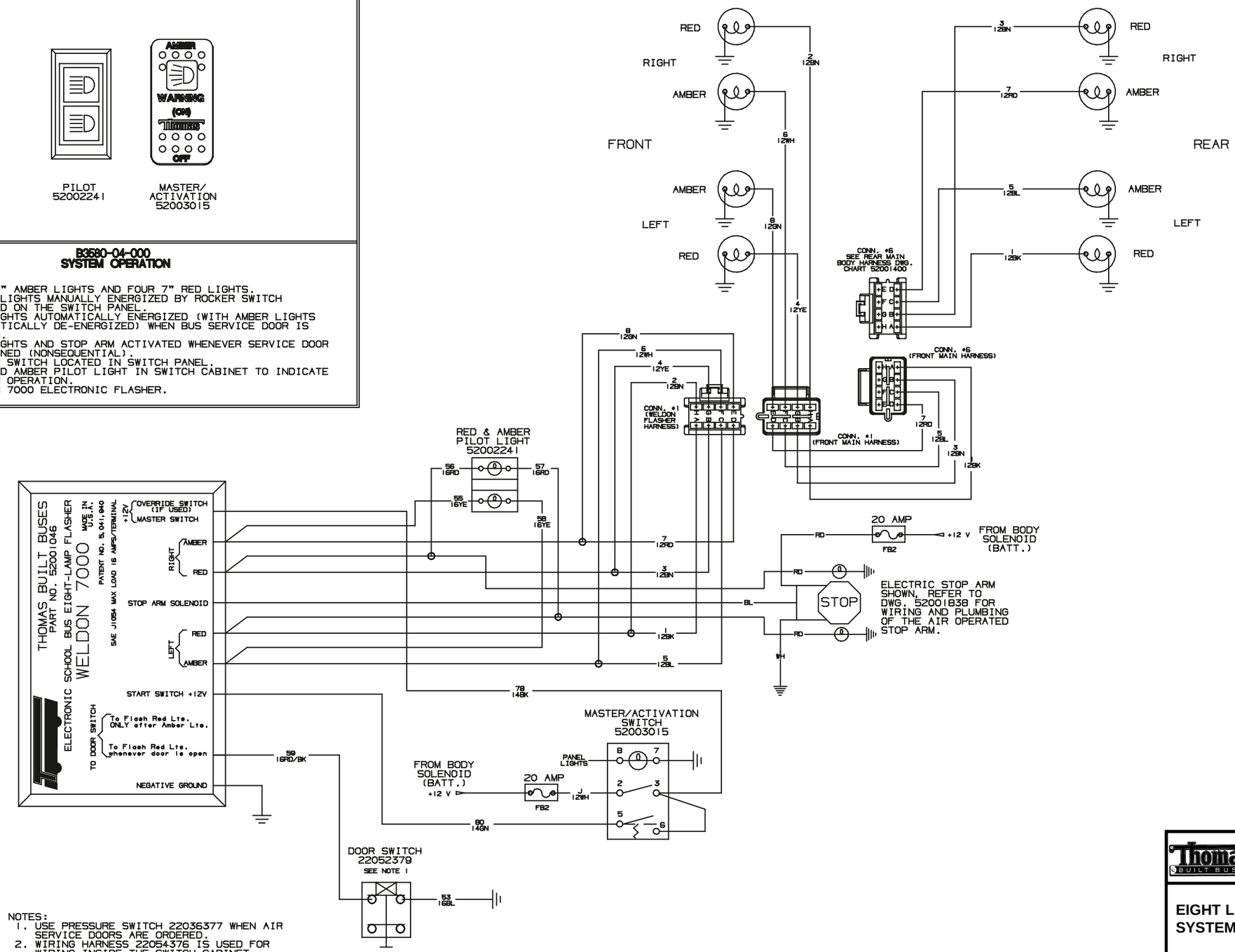

NOTES:
1. USE PRESSURE SWITCH 22036377 WHEN AIR SERVICE DOORS ARE ORDERED.
2. WIRING HARNESS 22054376 IS USED FOR WIRING INSIDE THE SWITCH CABINET.

Thomas BUILT BUSES

52002361 C

EIGHT LIGHT WARNING SYSTEM

Option B3580-04-000

SWITCH LAYOUT

PILOT
52002241

MASTER/
ACTIVATION
52002624 (B)

B3580-04-000
SYSTEM OPERATION

1. FOUR 7" AMBER LIGHTS AND FOUR 7" RED LIGHTS.
2. AMBER LIGHTS MANUALLY ENERGIZED BY ROCKER SWITCH LOCATED ON THE SWITCH PANEL.
3. RED LIGHTS AUTOMATICALLY ENERGIZED (WITH AMBER LIGHTS AUTOMATICALLY DE-ENERGIZED) WHEN BUS SERVICE DOOR IS OPENED.
4. RED LIGHTS AND STOP ARM ACTIVATED WHENEVER SERVICE DOOR IS OPENED (NONSEQUENTIAL).
5. MASTER SWITCH LOCATED IN SWITCH PANEL.
6. RED AND AMBER PILOT LIGHT IN SWITCH CABINET TO INDICATE SYSTEM OPERATION.
7. WELDON 7000 ELECTRONIC FLASHER.

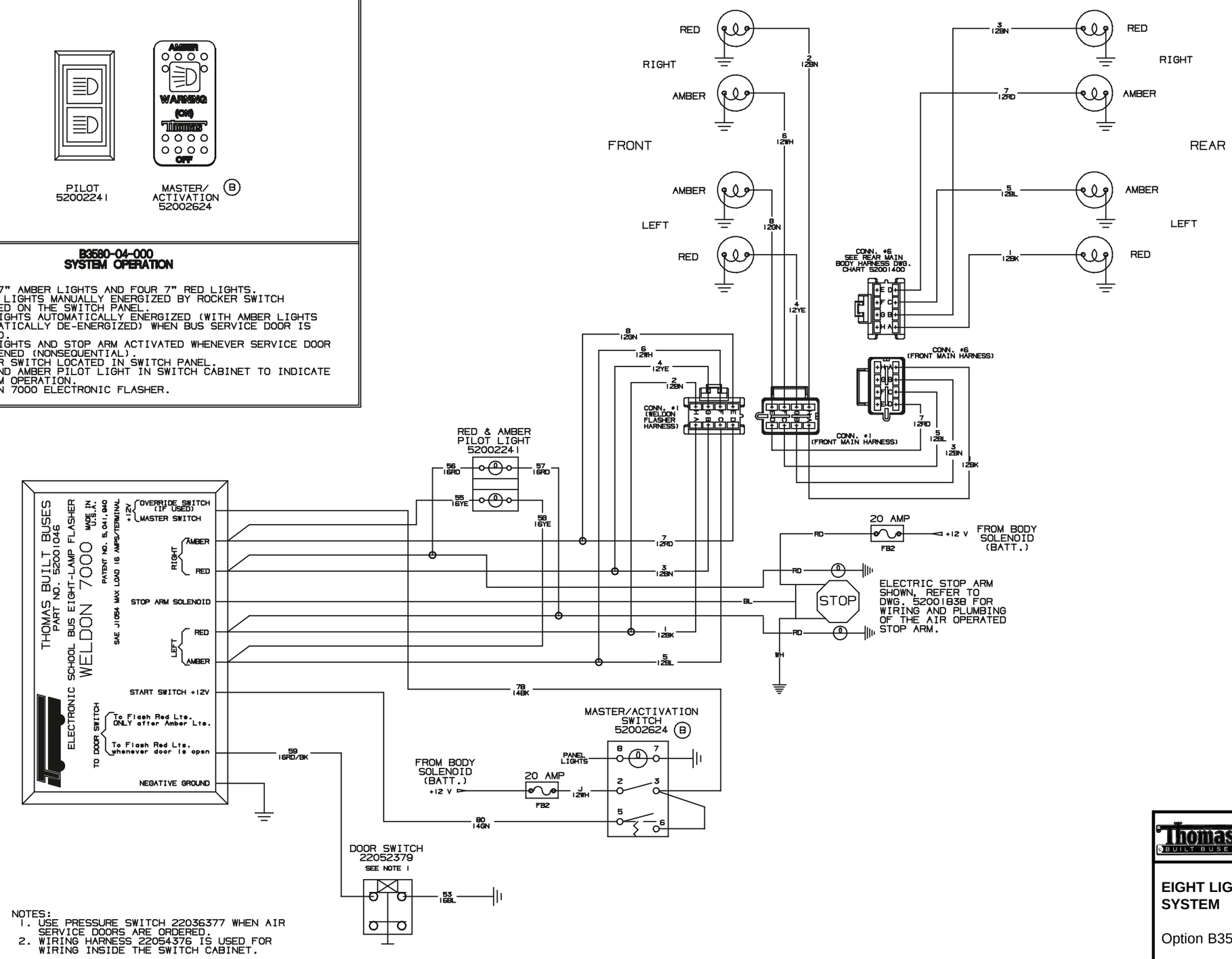

NOTES:
1. USE PRESSURE SWITCH 22036377 WHEN AIR SERVICE DOORS ARE ORDERED.
2. WIRING HARNESS 22054376 IS USED FOR WIRING INSIDE THE SWITCH CABINET.

Thomas BUILT BUSES

52002362 B

EIGHT LIGHT WARNING SYSTEM

Option B3580-06-000

SWITCH LAYOUT

PILOT
52002241

ACTIVATION
/CANCEL
52002623

B3580-08-000
SYSTEM OPERATION

1. FOUR 7" AMBER LIGHTS AND FOUR 7" RED LIGHTS.
2. AMBER LIGHTS MANUALLY ENERGIZED BY ROCKER SWITCH LOCATED ON THE SWITCH PANEL.
3. RED LIGHTS AUTOMATICALLY ENERGIZED (WITH AMBER LIGHTS AUTOMATICALLY DE-ENERGIZED) WHEN BUS SERVICE DOOR IS OPENED.
4. AMBER LIGHTS CAN ALSO BE DEACTIVATED BY ROCKER SWITCH LOCATED ON THE SWITCH PANEL.
5. RED LIGHTS AND STOP ARM ONLY ACTIVATED AFTER AMBER LIGHTS.
6. RED AND AMBER PILOT LIGHT IN SWITCH CABINET TO INDICATE SYSTEM OPERATION.
7. WELDON 7000 ELECTRONIC FLASHER.

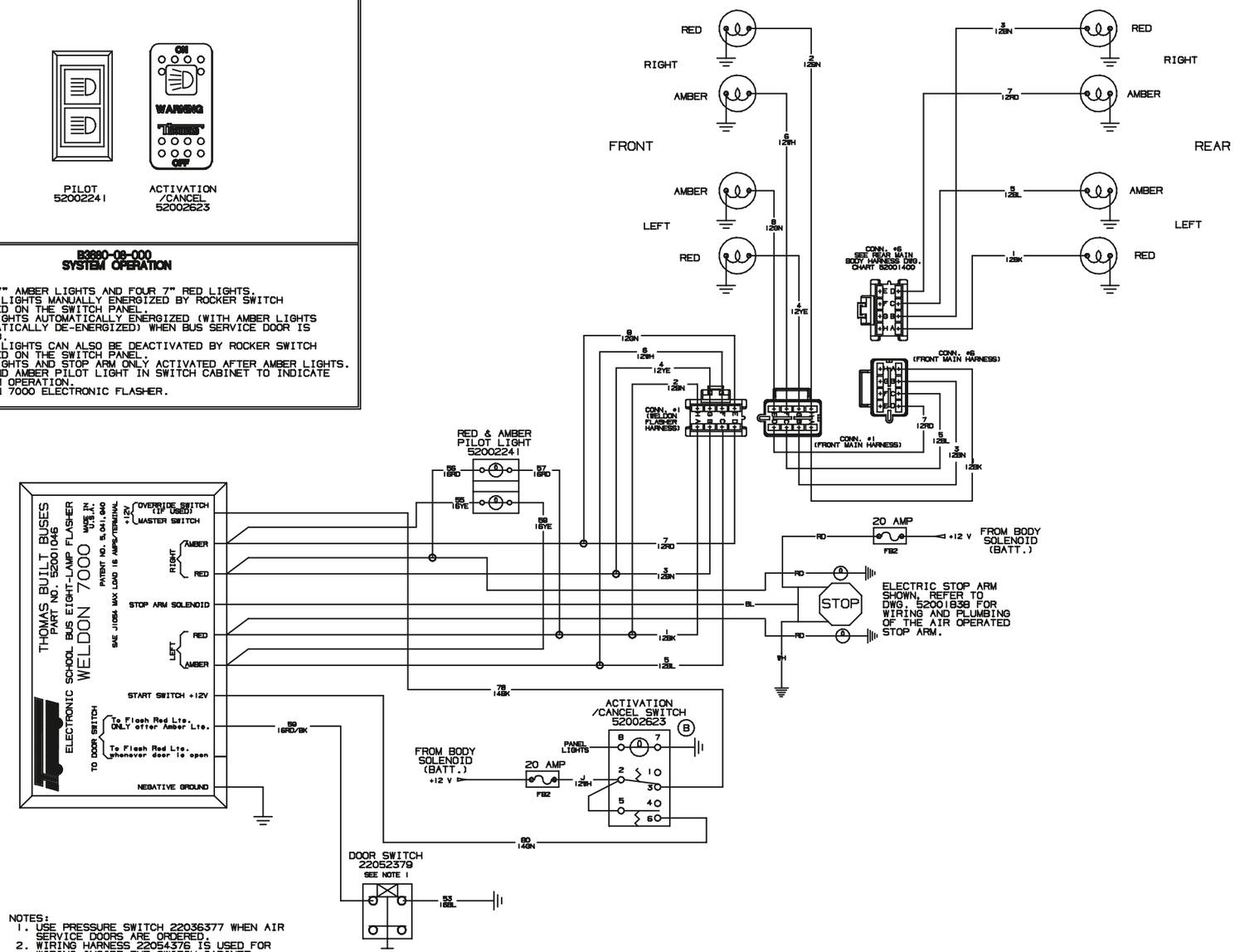

NOTES:
1. USE PRESSURE SWITCH 22036377 WHEN AIR SERVICE DOORS ARE ORDERED.
2. WIRING HARNESS 22054376 IS USED FOR WIRING INSIDE THE SWITCH CABINET.

Thomas BUILT BUSES

52002365 B

EIGHT LIGHT WARNING SYSTEM

Option B3580-08-000

SWITCH LAYOUT

ACTIVATION /CANCEL 52002623

PILOT 52002241

SWITCH BOX REQUIRED (CONV.)

	DOOR		
	MANUAL	AIR	ELECTRIC
CONV.	52002144	52002145	52002145
VISTA	SW. CABINET	SW. CABINET	SW. CABINET
PUSH		SW. CABINET	SW. CABINET
F.C.	SW. CABINET	SW. CABINET	SW. CABINET

B3580-11-000
SYSTEM OPERATION

1. FOUR 7" AMBER LIGHTS AND FOUR 7" RED LIGHTS.
2. (C) AMBER LIGHTS MANUALLY ENERGIZED BY ROCKER SWITCH LOCATED ON THE SWITCH PANEL OR CONTROL BOX LEFT OF STEERING COLUMN.
3. RED LIGHTS AUTOMATICALLY ENERGIZED (WITH AMBER LIGHTS AUTOMATICALLY DE-ENERGIZED) WHEN BUS SERVICE DOOR IS OPENED.
4. AMBER LIGHTS CAN ALSO BE DEACTIVATED BY ROCKER SWITCH LOCATED ON THE SWITCH PANEL OR CONTROL BOX.
5. RED LIGHTS AND STOP ARM ONLY ACTIVATED AFTER AMBER LIGHTS.
6. (C) RED AND AMBER PILOT LIGHT IN SWITCH CABINET OR CONTROL BOX TO INDICATE SYSTEM OPERATION.
7. WELDON 7000 ELECTRONIC FLASHER.

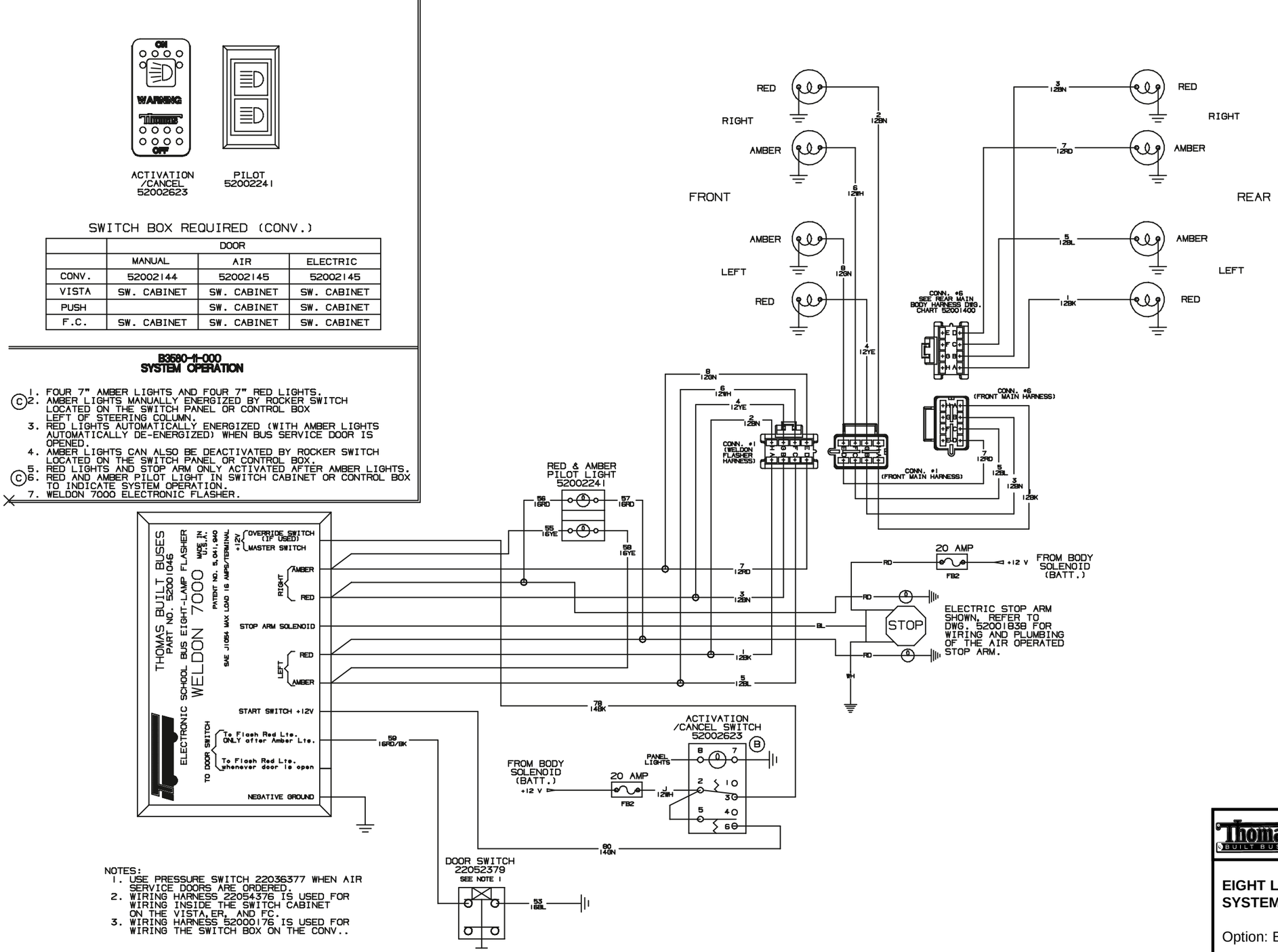

NOTES:
1. USE PRESSURE SWITCH 22036377 WHEN AIR SERVICE DOORS ARE ORDERED.
2. WIRING HARNESS 22054376 IS USED FOR WIRING INSIDE THE SWITCH CABINET ON THE VISTA,ER, AND FC.
3. WIRING HARNESS 52000176 IS USED FOR WIRING THE SWITCH BOX ON THE CONV..

Thomas BUILT BUSES

52002498 C

EIGHT LIGHT WARNING SYSTEM

Option: B3580-11-000

SWITCH LAYOUT

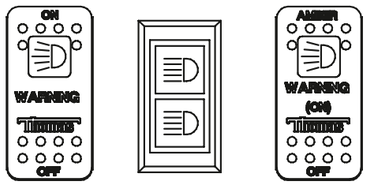

OVERRIDE 52003024 | PILOT 52002241 | MASTER/ ACTIVATION 52003015

B3580-13-000
SYSTEM OPERATION

1. FOUR 7" AMBER LIGHTS AND FOUR 7" RED LIGHTS.
2. AMBER LIGHTS MANUALLY ENERGIZED BY ROCKER SWITCH LOCATED ON THE SWITCH PANEL.
3. RED LIGHTS AUTOMATICALLY ENERGIZED (WITH AMBER LIGHTS AUTOMATICALLY DE-ENERGIZED) WHEN BUS SERVICE DOOR IS OPENED.
4. RED LIGHTS AND STOP ARM ACTIVATED WHENEVER SERVICE DOOR IS OPENED (NONSEQUENTIAL).
5. MASTER SWITCH LOCATED IN SWITCH PANEL.
6. OVERRIDE SWITCH IN SWITCH PANEL TO FLASH RED LIGHTS AND EXTEND STOP ARM.
7. RED AND AMBER PILOT LIGHT IN SWITCH CABINET TO INDICATE SYSTEM OPERATION.
8. WELDON 7000 ELECTRONIC FLASHER.

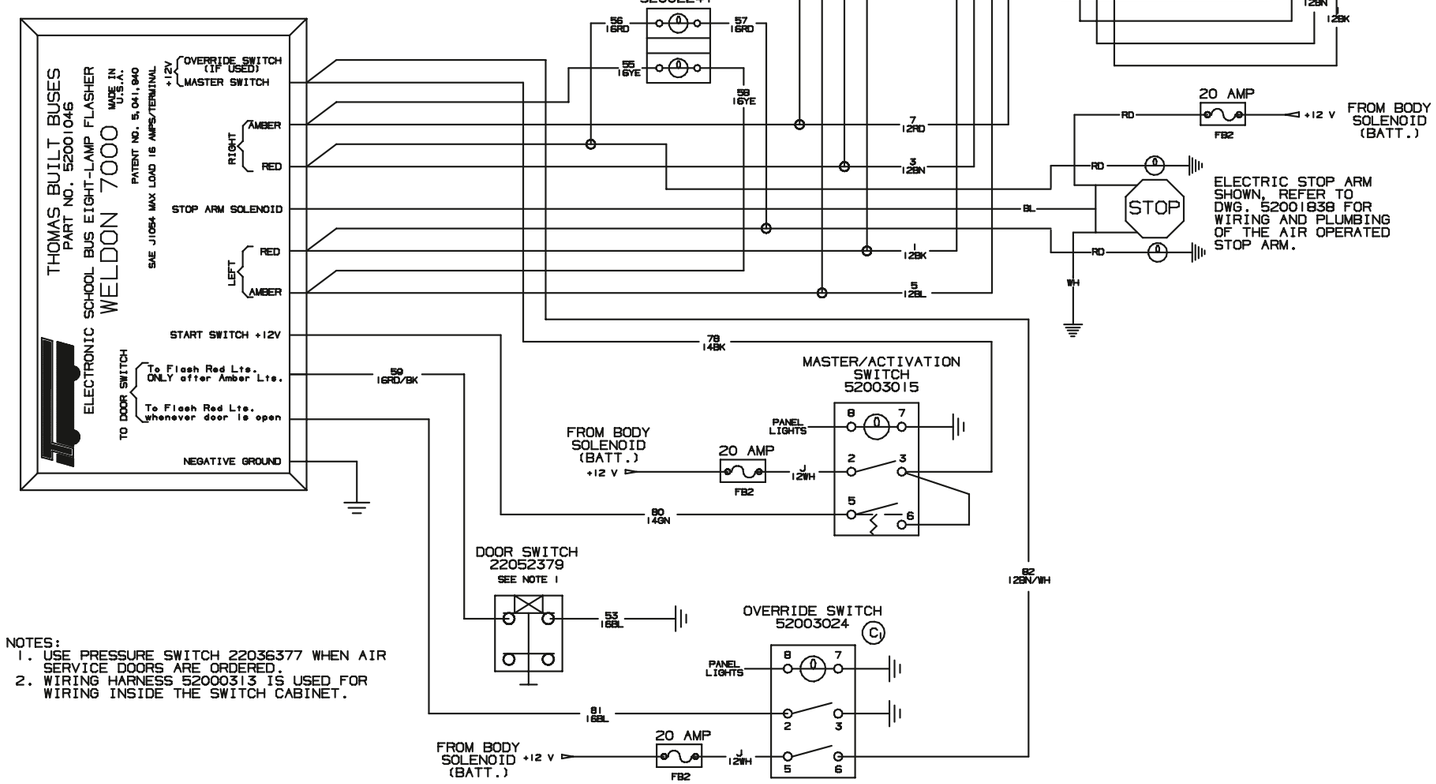

NOTES:
1. USE PRESSURE SWITCH 22036377 WHEN AIR SERVICE DOORS ARE ORDERED.
2. WIRING HARNESS 52000313 IS USED FOR WIRING INSIDE THE SWITCH CABINET.

Thomas BUILT BUSES | 52002500 C

EIGHT LIGHT WARNING SYSTEM

Option B3580-1300

SWITCH LAYOUT

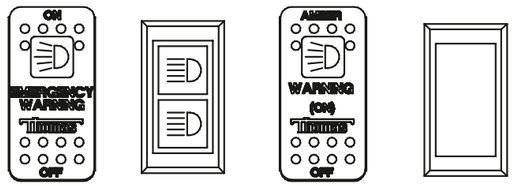

EMERGENCY WARNING 52003207 | PILOT 52002241 | MASTER/ ACTIVATION 52003110 | GREEN PILOT 52003258

B3580-13-000
SYSTEM OPERATION

1. FOUR 7" AMBER LIGHTS AND FOUR 7" RED LIGHTS.
2. AMBER LIGHTS MANUALLY ENERGIZED BY ROCKER SWITCH LOCATED ON THE SWITCH PANEL.
3. RED LIGHTS AUTOMATICALLY ENERGIZED (WITH AMBER LIGHTS AUTOMATICALLY DE-ENERGIZED) WHEN BUS SERVICE DOOR IS OPENED.
4. RED LIGHTS AND STOP ARM ACTIVATED WHENEVER SERVICE DOOR IS OPENED (NONSEQUENTIAL).
5. MASTER SWITCH LOCATED IN SWITCH PANEL.
6. OVERRIDE SWITCH IN SWITCH PANEL TO FLASH RED LIGHTS AND EXTEND STOP ARM.
7. RED AND AMBER PILOT LIGHT IN SWITCH CABINET TO INDICATE SYSTEM OPERATION.
8. WELDON 7000 ELECTRONIC FLASHER.

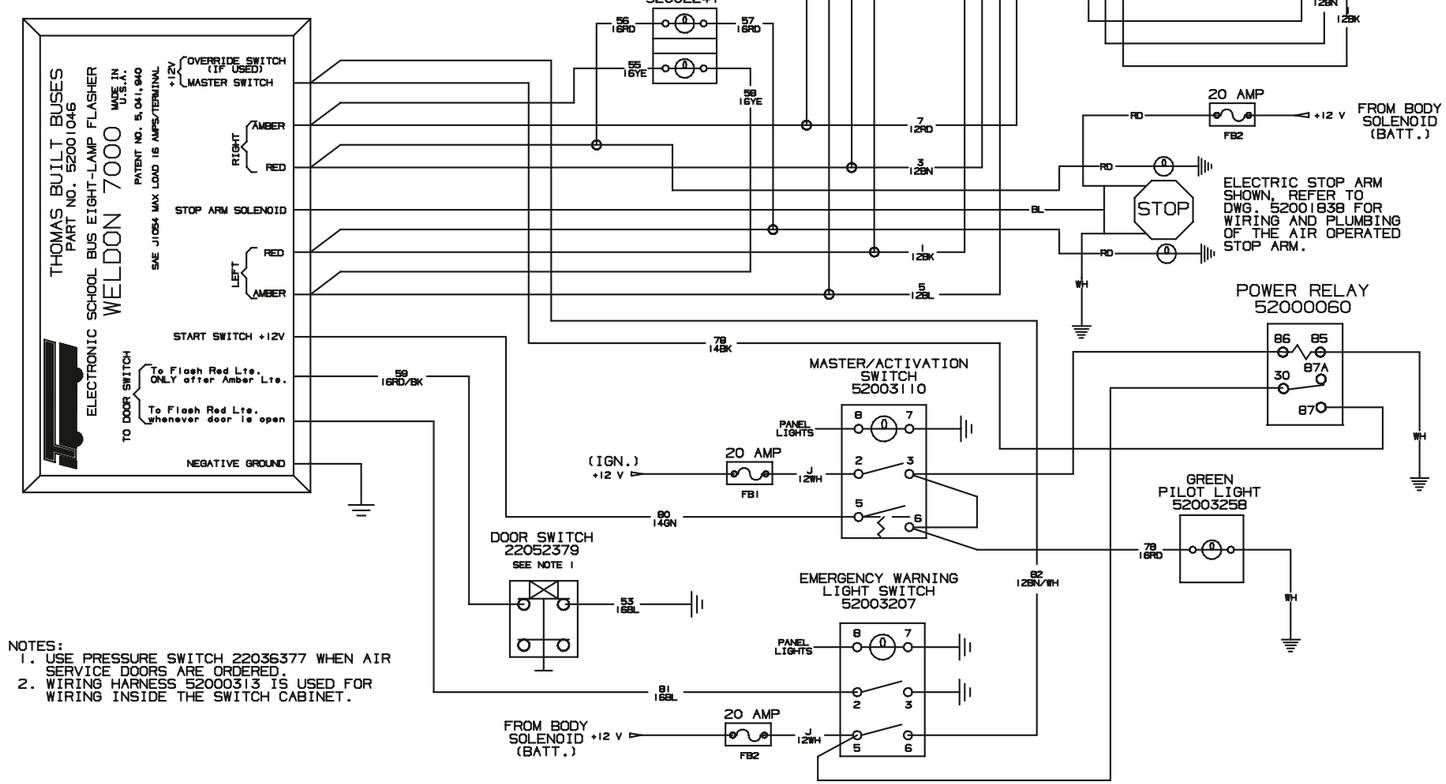

NOTES:
1. USE PRESSURE SWITCH 22036377 WHEN AIR SERVICE DOORS ARE ORDERED.
2. WIRING HARNESS 52000313 IS USED FOR WIRING INSIDE THE SWITCH CABINET.

Thomas BUILT BUSES

52003257 A

EIGHT LIGHT WARNING SYSTEM w/RED OVER-RIDE SWITCH

Option B3580-13-000

SWITCH LAYOUT

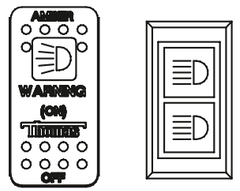

MASTER/ ACTIVATION 52003015

PILOT 52002241

SWITCH BOX REQUIRED

	MANUAL DOOR	AIR DOOR	ELECTRIC DOOR
CONV.	52002144	52002145	52002145
VISTA	52002218	52002437	52002437
PUSH		DASH	DASH
F.C.	52002218	52002225	52002225

B3580-17-000 SYSTEM OPERATION

1. FOUR 7" AMBER LIGHTS AND FOUR 7" RED LIGHTS.
2. AMBER LIGHTS MANUALLY ENERGIZED BY ROCKER SWITCH LOCATED ON THE DASH PANEL (ER) OR IN A SWITCH BOX RIGHT OF STEERING COLUMN.
3. RED LIGHTS AUTOMATICALLY ENERGIZED (WITH AMBER LIGHTS AUTOMATICALLY DE-ENERGIZED) WHEN BUS SERVICE DOOR IS OPENED.
4. RED LIGHTS AND STOP ARM ACTIVATED WHENEVER SERVICE DOOR IS OPENED (NONSEQUENTIAL).
5. MASTER SWITCH LOCATED ON DASH PANEL (ER) OR IN SWITCH BOX RIGHT OF STEERING COLUMN.
6. RED AND AMBER PILOT LIGHT ON DASH PANEL (ER) OR SWITCH BOX RIGHT OF STEERING COLUMN TO INDICATE SYSTEM OPERATION.
7. WELDON 7000 ELECTRONIC FLASHER.

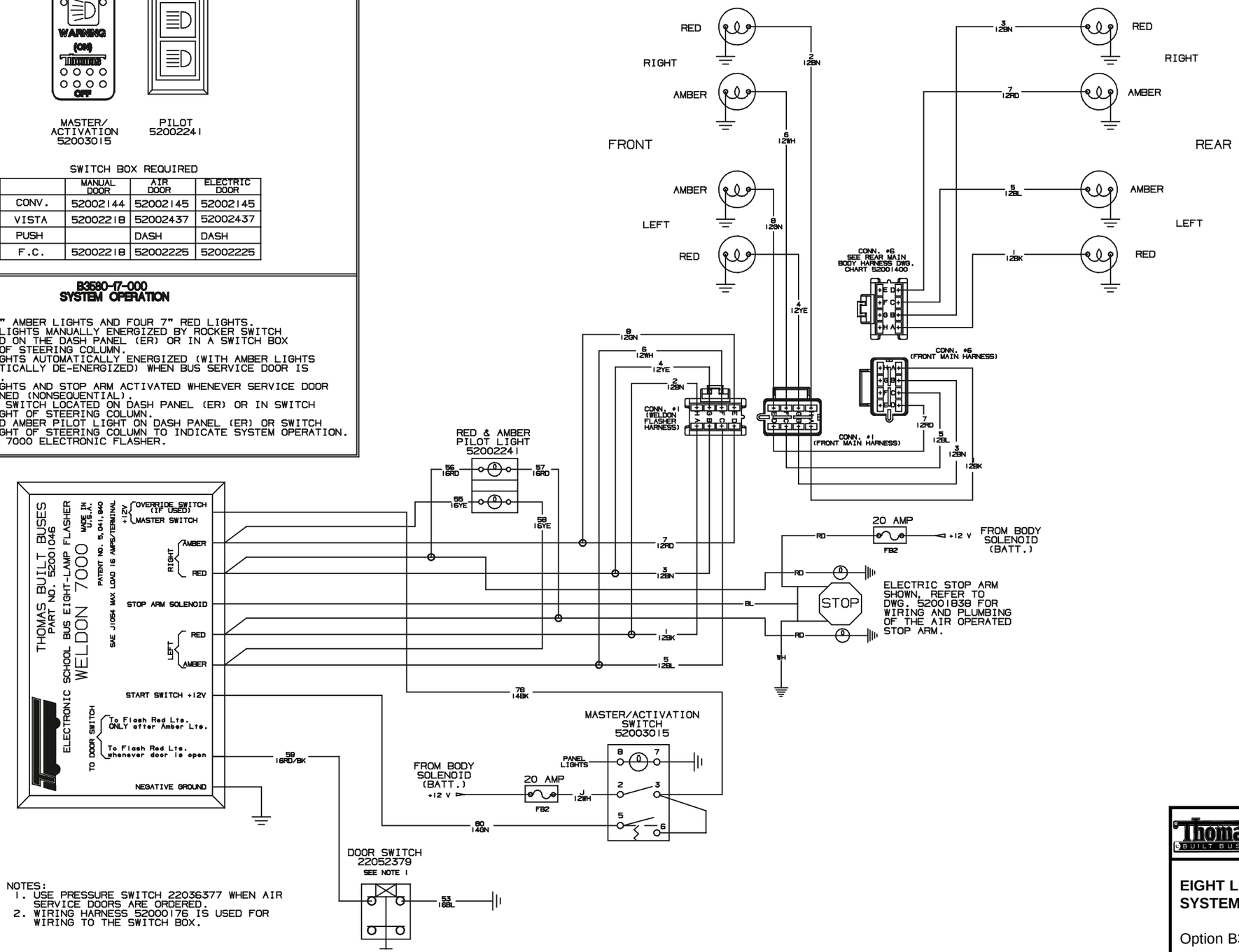

NOTES:
1. USE PRESSURE SWITCH 22036377 WHEN AIR SERVICE DOORS ARE ORDERED.
2. WIRING HARNESS 52000176 IS USED FOR WIRING TO THE SWITCH BOX.

Thomas BUILT BUSES

52002519 C

EIGHT LIGHT WARNING SYSTEM

Option B3580-17-000

SWITCH LAYOUT

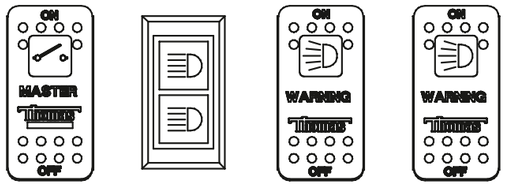

MASTER 52002642 | PILOT 52002241 | OVERRIDE /CANCEL 52002623 | ACTIVATION 52003014

B3680-20-000 SYSTEM OPERATION

1. FOUR 7" AMBER LIGHTS AND FOUR 7" RED LIGHTS.
2. AMBER LIGHTS MANUALLY ENERGIZED BY ROCKER SWITCH LOCATED ON THE SWITCH PANEL.
3. RED LIGHTS AUTOMATICALLY ENERGIZED (WITH AMBER LIGHTS AUTOMATICALLY DE-ENERGIZED) WHEN BUS SERVICE DOOR IS OPENED.
4. AMBER LIGHTS CAN ALSO BE DEACTIVATED BY ROCKER SWITCH LOCATED ON THE SWITCH PANEL.
5. RED LIGHTS AND STOP ARM ONLY ACTIVATED AFTER AMBER LIGHTS.
6. MASTER SWITCH WITH PILOT LIGHT LOCATED IN SWITCH PANEL.
7. OVERRIDE SWITCH IN SWITCH PANEL TO FLASH RED LIGHTS AND EXTEND STOP ARM.
8. RED AND AMBER PILOT LIGHT IN SWITCH CABINET TO INDICATE SYSTEM OPERATION.
9. WELDON 7000 ELECTRONIC FLASHER.

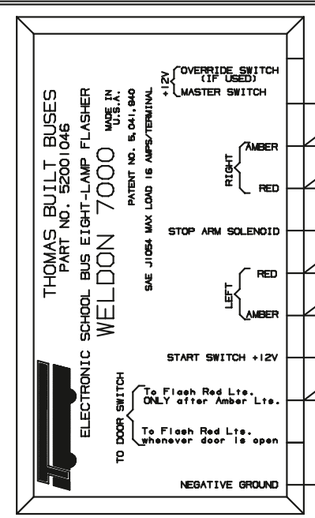

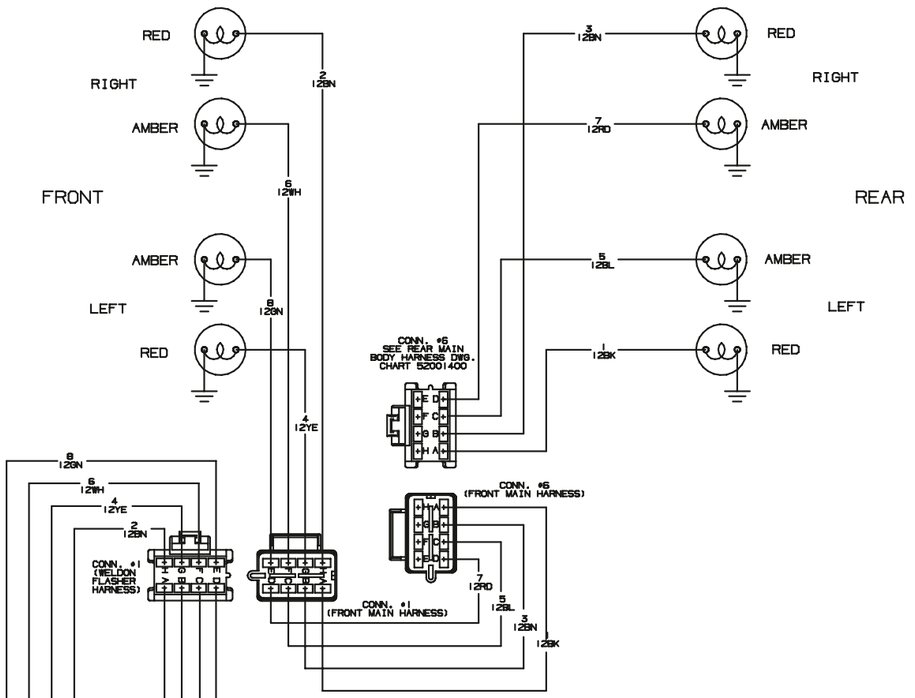

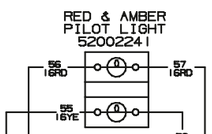

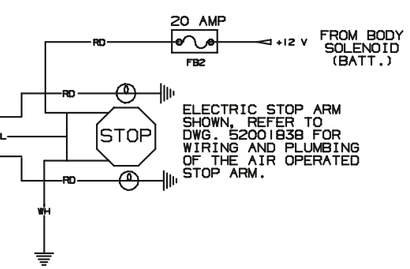

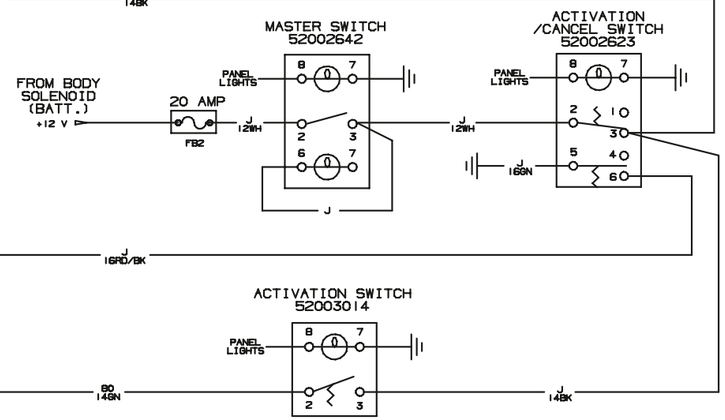

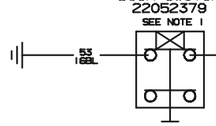

NOTES:
1. USE PRESSURE SWITCH 22036377 WHEN AIR SERVICE DOORS ARE ORDERED.
2. WIRING HARNESS 22054376 IS USED FOR WIRING INSIDE THE SWITCH CABINET.

Thomas BUILT BUSES

52002568 C

EIGHT LIGHT WARNING SYSTEM

Option B3580-20-000

SWITCH LAYOUT

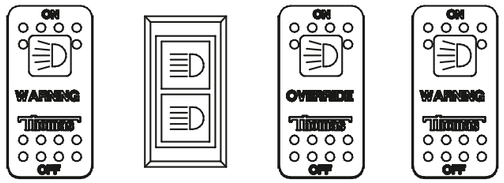

ACTIVATION 52002622 | PILOT 52002241 | OVERRIDE 52003023 | MASTER 52003014

SWITCH BOX REQUIRED

	MANUAL DOOR	AIR DOOR	ELECTRIC DOOR
CONV.	52002144	52002145	52002145
VISTA	52002218	52002437	52002437
PUSH		DASH	DASH
F.C.	52002218	52002225	52002225

B3580-21-000
SYSTEM OPERATION

1. FOUR 7" AMBER LIGHTS AND FOUR 7" RED LIGHTS.
2. AMBER LIGHTS MANUALLY ENERGIZED BY ROCKER SWITCH LOCATED ON THE DASH PANEL (ER) OR IN A SWITCH BOX RIGHT OF STEERING COLUMN.
3. RED LIGHTS AUTOMATICALLY ENERGIZED (WITH AMBER LIGHTS AUTOMATICALLY DE-ENERGIZED) WHEN BUS SERVICE DOOR IS OPENED.
4. RED LIGHTS AND STOP ARM ACTIVATED WHENEVER SERVICE DOOR IS OPENED (NONSEQUENTIAL).
5. MASTER SWITCH LOCATED ON THE DASH PANEL (ER) OR IN A SWITCH BOX RIGHT OF STEERING COLUMN.
6. OVERRIDE SWITCH LOCATED ON DASH PANEL (ER) OR IN SWITCH BOX RIGHT OF STEERING COLUMN TO FLASH RED LIGHTS AND EXTEND STOP ARM.
7. RED PILOT LIGHT ON DASH PANEL (ER) OR IN CONTROL BOX TO INDICATE SYSTEM OPERATION.
8. WELDON 7000 ELECTRONIC FLASHER.

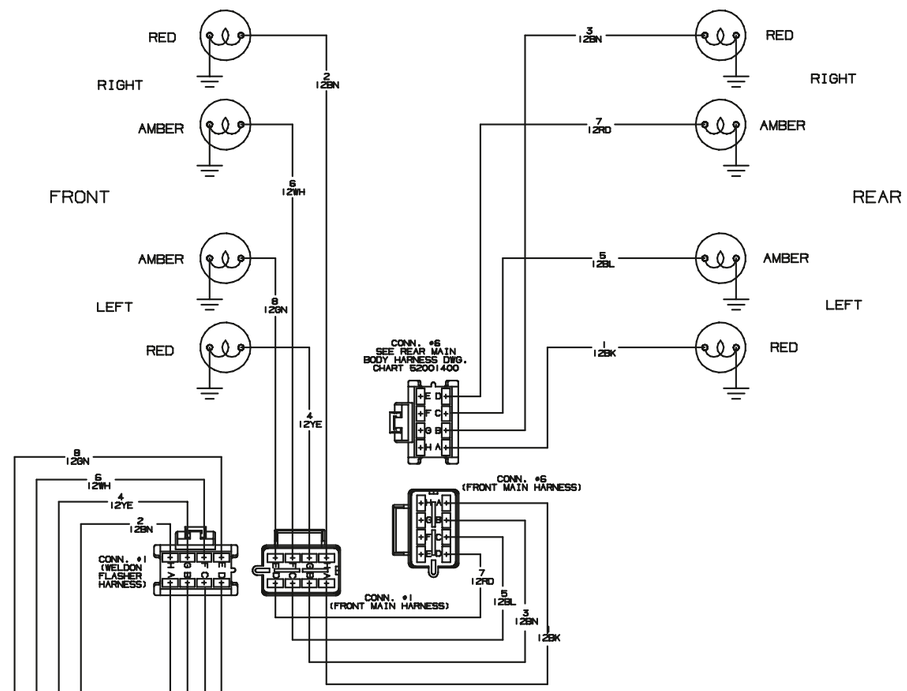

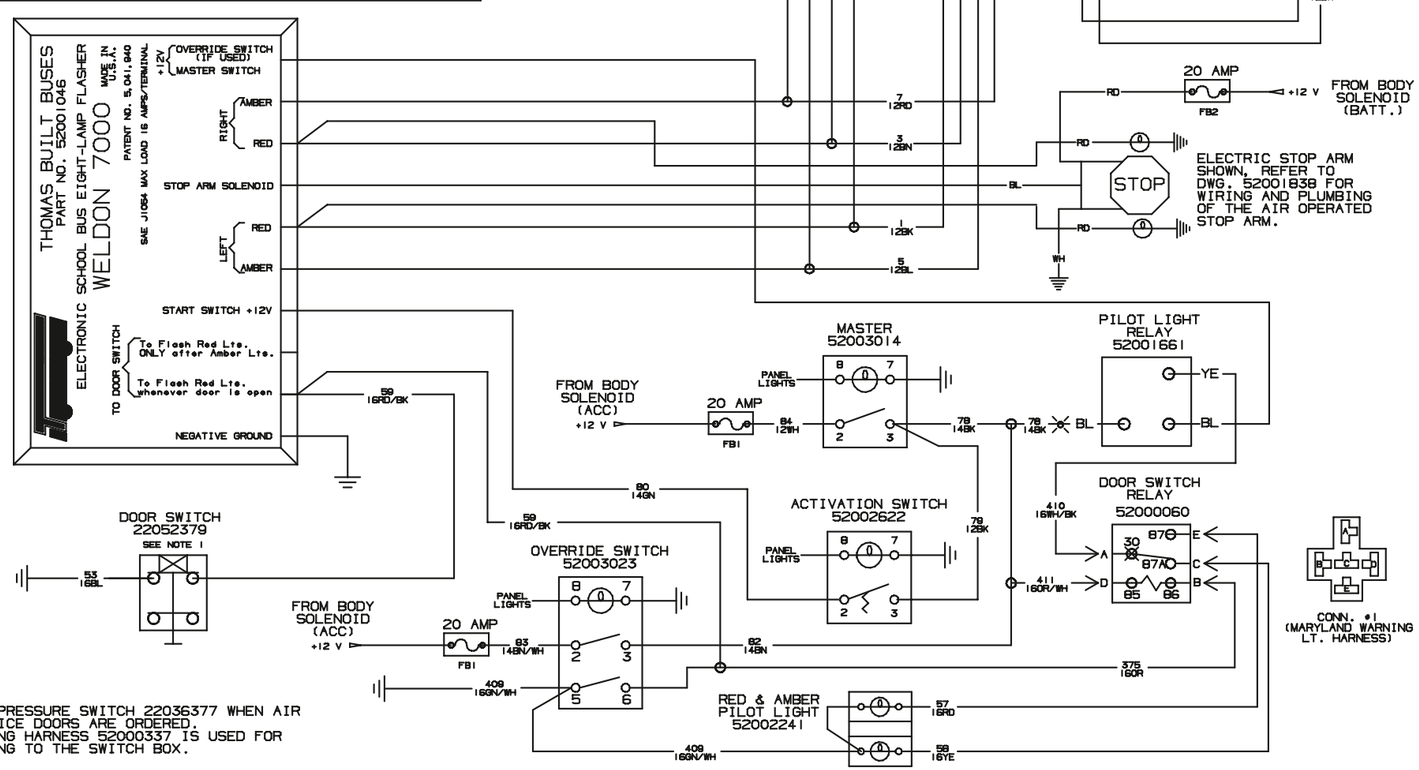

NOTES:
1. USE PRESSURE SWITCH 22036377 WHEN AIR SERVICE DOORS ARE ORDERED.
2. WIRING HARNESS 52000337 IS USED FOR WIRING TO THE SWITCH BOX.

Thomas BUILT BUSES

52002526 C

EIGHT LIGHT WARNING SYSTEM (MARYLAND)

Option B3580-21-000

SWITCH LAYOUT

PILOT 52002241 — MASTER/ ACTIVATION 52003015

B3580-23-000
SYSTEM OPERATION

1. FOUR 7" AMBER LIGHTS AND FOUR 7" RED LIGHTS.
2. AMBER LIGHTS MANUALLY ENERGIZED BY ROCKER SWITCH LOCATED ON THE SWITCH PANEL.
3. RED LIGHTS AUTOMATICALLY ENERGIZED (WITH AMBER LIGHTS AUTOMATICALLY DE-ENERGIZED) WHEN BUS SERVICE DOOR IS OPENED.
4. RED LIGHTS AND STOP ARM ONLY ACTIVATED AFTER AMBER LIGHTS.
5. MASTER SWITCH LOCATED IN SWITCH PANEL.
6. RED AND AMBER PILOT LIGHT IN SWITCH CABINET TO INDICATE SYSTEM OPERATION.
7. SEPERATE RELAY FOR WARNING LIGHT SYSTEM.
8. WELDON 7000 ELECTRONIC FLASHER.

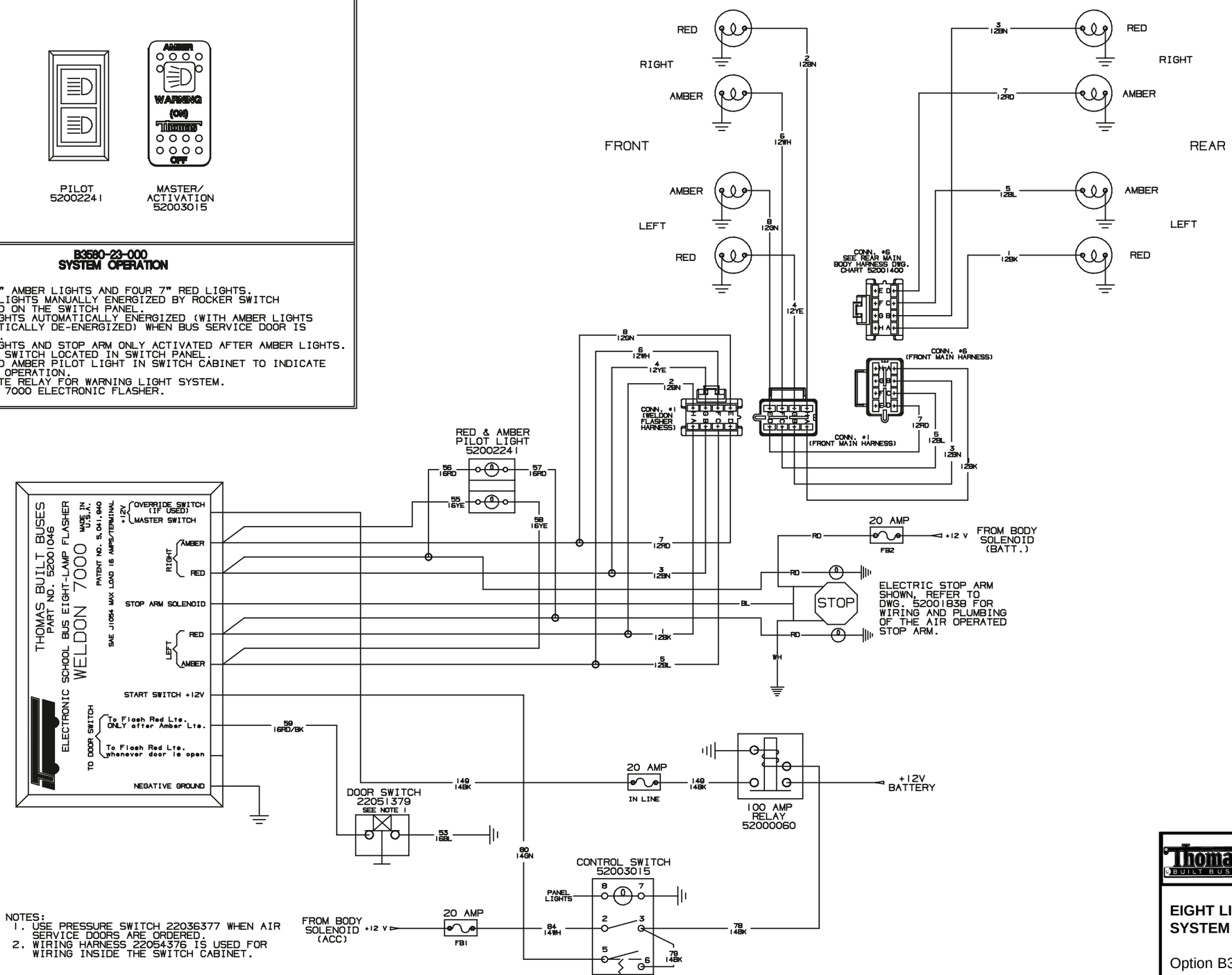

NOTES:
1. USE PRESSURE SWITCH 22036377 WHEN AIR SERVICE DOORS ARE ORDERED.
2. WIRING HARNESS 22054376 IS USED FOR WIRING INSIDE THE SWITCH CABINET.

Thomas BUILT BUSES — 52002335 C

EIGHT LIGHT WARNING SYSTEM (N. CAROLINA)

Option B3580-23-000

SWITCH LAYOUT

CANCEL 52002621 | ACTIVATION (MOMENTARY) 52002622 | PILOT 52002241 | STOP ARM INTERRUPT 52002641

MOUNTED IN SWITCH CABINET

SWITCH BOX REQUIRED

	MANUAL DOOR	AIR DOOR	ELECTRIC DOOR
CONV.	52002144	52002145	52002145
VISTA	52002218	52002437	52002437
PUSH		DASH	DASH
F.C.	52002218	52002225	52002225

B3690-24-000 SYSTEM OPERATION

1. FOUR 7" AMBER LIGHTS AND FOUR 7" RED LIGHTS.
2. AMBER LIGHTS MANUALLY ENERGIZED BY ROCKER SWITCH LOCATED ON THE DASH PANEL (ER) OR IN A SWITCH BOX RIGHT OF STEERING COLUMN.
3. RED LIGHTS AUTOMATICALLY ENERGIZED (WITH AMBER LIGHTS AUTOMATICALLY DE-ENERGIZED) WHEN BUS SERVICE DOOR IS OPENED.
4. AMBER LIGHTS ALSO DEACTIVATED BY ROCKER SWITCH LOCATED IN SWITCH CABINET.
5. RED LIGHTS AND STOP ARM ONLY ACTIVATED AFTER AMBER LIGHTS.
6. STOP ARM AND CROSSING ARM INTERRUPT SWITCH LOCATED ON THE DASH PANEL (ER) OR IN A SWITCH BOX RIGHT OF STEERING COLUMN.
7. RED PILOT LIGHT IN CONTROL BOX TO INDICATE SYSTEM OPERATION.
8. WELDON 7000 ELECTRONIC FLASHER.

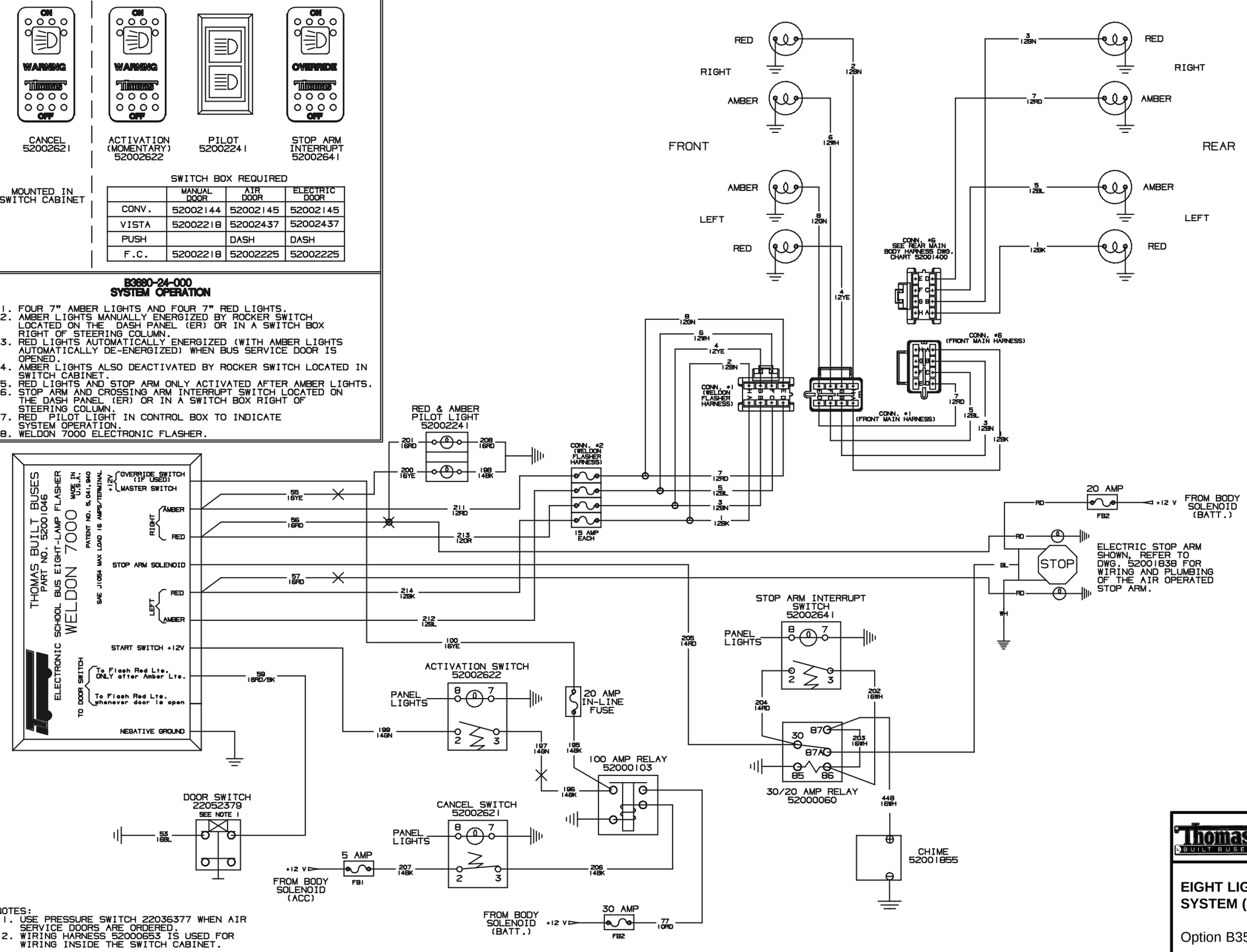

NOTES:
1. USE PRESSURE SWITCH 22036377 WHEN AIR SERVICE DOORS ARE ORDERED.
2. WIRING HARNESS 52000653 IS USED FOR WIRING INSIDE THE SWITCH CABINET.

Thomas BUILT BUSES

52002528 B

EIGHT LIGHT WARNING SYSTEM (VIRGINIA)

Option B3580-24-000

SWITCH LAYOUT

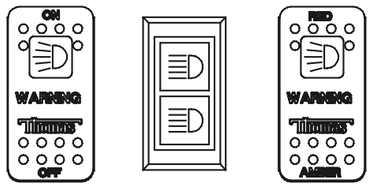

MASTER 53003014 | PILOT 52002241 | CONTROL 52002619

B3680-26-000
SYSTEM OPERATION

WITH MASTER SWITCH, CONTROL SWITCH, AND SERVICE DOOR IN THE FOLLOWING POSITIONS:

CONDITION OF STOP ARM(S), STOP ARM LIGHTS, AMBER WARNING LIGHTS AND RED WARNING LIGHTS MUST BE:

MASTER SWITCH POSITION (ON OR OFF)	CONTROL SWITCH POSITION (3 POSITION: OFF, AMBER, OR RED)	SERVICE DOOR POSITION	STOP ARMS, STOP ARM LIGHTS	AMBER WARNING AND PILOT LIGHTS	RED WARNING AND PILOT LIGHTS	AUDIBLE ALARM
1 ON	OFF	CLOSED	1 RETRACTED, OFF	OFF	OFF	OFF
2 ON	OFF	OPEN	2 RETRACTED, OFF	OFF	ON	ON
3 ON	AMBER	CLOSED	3 RETRACTED, OFF	ON	OFF	OFF
4 ON	AMBER	OPEN	4 RETRACTED, OFF	OFF	ON	ON
5 ON	RED	CLOSED	5 EXTENDED, ON	OFF	ON	OFF
6 ON	RED	OPEN	6 EXTENDED, ON	OFF	ON	OFF
7 OFF	ANY POS.	ANY POS.	7 RETRACTED, OFF	OFF	OFF	OFF

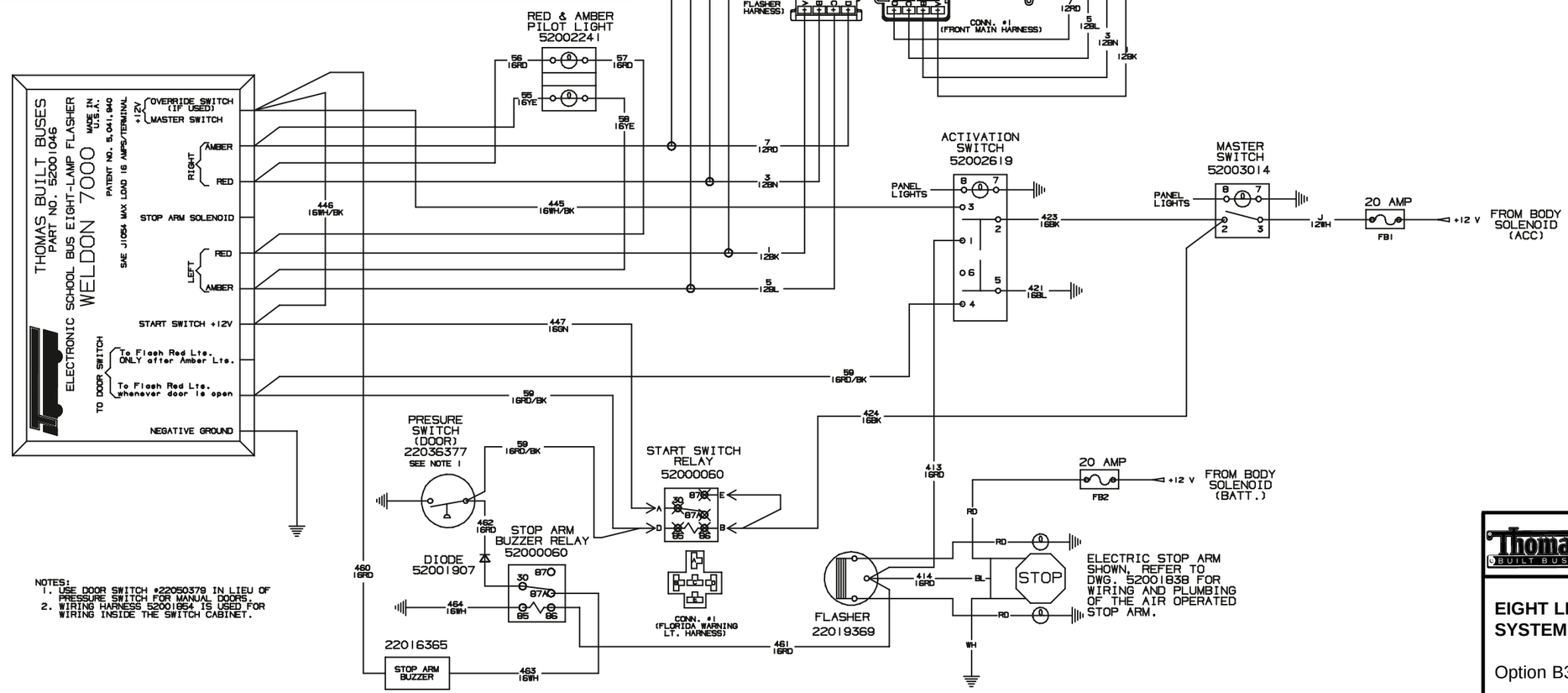

NOTES:
1. USE DOOR SWITCH #22050379 IN LIEU OF PRESSURE SWITCH FOR MANUAL DOORS.
2. WIRING HARNESS 52001854 IS USED FOR WIRING INSIDE THE SWITCH CABINET.

52002327 C

EIGHT LIGHT WARNING SYSTEM (FLORIDA)

Option B3580-26-000

SWITCH LAYOUT

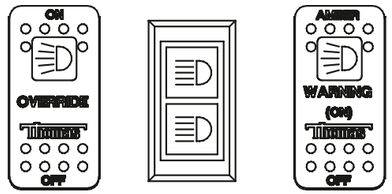

OVERRIDE 52003023 | PILOT 52002241 | MASTER/ ACTIVATION 52003015

B3580-27-000 SYSTEM OPERATION

1. FOUR 7" AMBER LIGHTS AND FOUR 7" RED LIGHTS.
2. AMBER LIGHTS MANUALLY ENERGIZED BY ROCKER SWITCH LOCATED ON THE SWITCH PANEL.
3. RED LIGHTS AUTOMATICALLY ENERGIZED (WITH AMBER LIGHTS AUTOMATICALLY DE-ENERGIZED) WHEN BUS SERVICE DOOR IS OPENED.
4. RED LIGHTS AND STOP ARM ACTIVATED WHENEVER SERVICE DOOR IS OPENED (NONSEQUENTIAL).
5. MASTER SWITCH LOCATED IN SWITCH PANEL.
6. OVERRIDE SWITCH IN SWITCH PANEL TO FLASH RED LIGHTS AND EXTEND STOP ARM.
7. RED AND AMBER PILOT LIGHT IN SWITCH CABINET TO INDICATE SYSTEM OPERATION.
8. WELDON 7000 ELECTRONIC FLASHER.

COLOR & SYMBOLS LEGEND

RD-RED	BL-BLUE
BR-BROWN	BK-BLACK
GN-GREEN	OR-ORANGE
YE-YELLOW	PU-PURPLE
LT-LIGHT	DK-DARK
WH-WHITE	J-JUMPER

FUSE RATING — 5 AMP

FB

FUSE/ CIRCUIT BREAKER BLOCK NUMBER

CURCUIT NUMBER — 10 16YE — GAUGE — COLOR

GROUND

SPLICE

DIOXDE

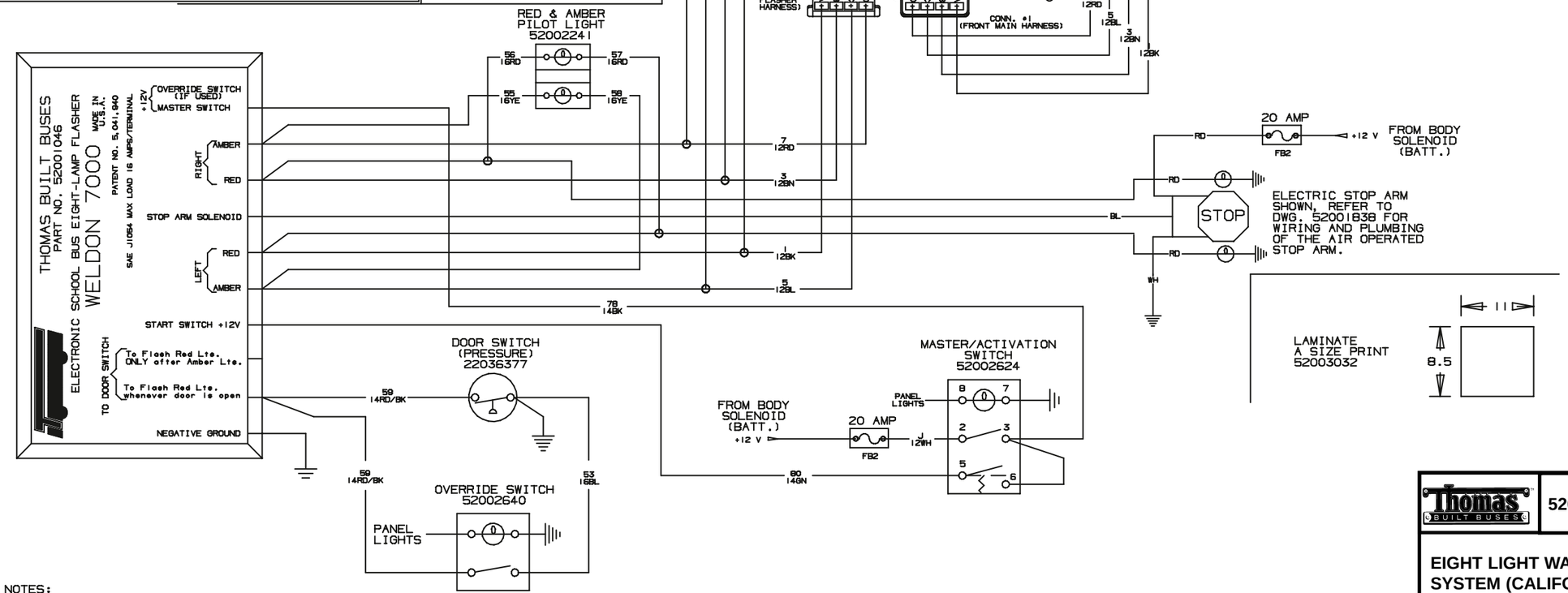

NOTES:
1. USE PUSH BUTTON SWITCH 22052379 WHEN MANUAL SERVICE DOORS ARE ORDERED.
2. WIRING HARNESS 52001870 IS USED FOR WIRING INSIDE THE SWITCH CABINET.

Thomas BUILT BUSES

52002554 D

EIGHT LIGHT WARNING SYSTEM (CALIFORNIA)

Option B3580-27-000

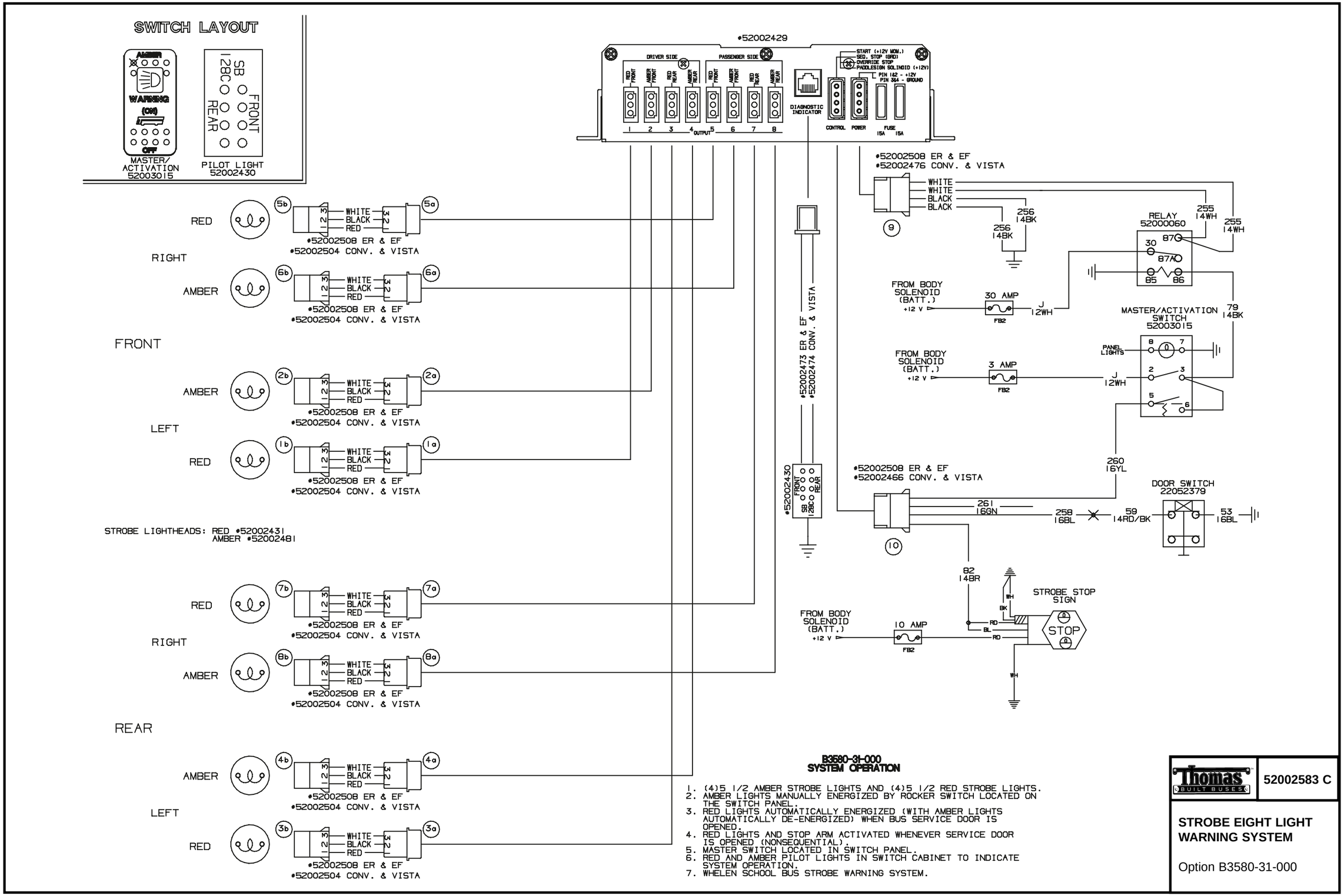

B3580-31-000
SYSTEM OPERATION

1. (4)5 1/2 AMBER STROBE LIGHTS AND (4)5 1/2 RED STROBE LIGHTS.
2. AMBER LIGHTS MANUALLY ENERGIZED BY ROCKER SWITCH LOCATED ON THE SWITCH PANEL.
3. RED LIGHTS AUTOMATICALLY ENERGIZED (WITH AMBER LIGHTS AUTOMATICALLY DE-ENERGIZED) WHEN BUS SERVICE DOOR IS OPENED.
4. RED LIGHTS AND STOP ARM ACTIVATED WHENEVER SERVICE DOOR IS OPENED (NONSEQUENTIAL).
5. MASTER SWITCH LOCATED IN SWITCH PANEL.
6. RED AND AMBER PILOT LIGHTS IN SWITCH CABINET TO INDICATE SYSTEM OPERATION.
7. WHELEN SCHOOL BUS STROBE WARNING SYSTEM.

Thomas BUILT BUSES

52002583 C

STROBE EIGHT LIGHT WARNING SYSTEM

Option B3580-31-000

SWITCH LAYOUT

PUSH BUTTON
52002965
(2) MOUNTING BRACKET
52003155

PILOT
52002241

DOOR/WARNING SYS.
PADDLE SWITCH
52003066

B3580-32-000
SYSTEM DESCRIPTION

1. FOUR 7" AMBER LIGHTS AND FOUR 7" RED LIGHTS.
2. WELDON 7000 ELECTRONIC FLASHER.
3. STOP SIGN EXTENDS WHEN RED LIGHTS ARE ENERGIZED.
4. AMBER LIGHTS MANUALLY ENERGIZED BY PUSH BUTTON SWITCH LOCATED ON THE SWITCH PANEL.
5. DOOR AND LIGHTS CONTROLLED BY A THREE WAY SWITCH:
   POSITION 1: DOOR CLOSED, AMBER LIGHTS ON IF ACTIVATED
   POSITION 2: DOOR REMAINS CLOSED. RED LIGHTS OPERATE ONLY IF AMBER LIGHTS HAVE BEEN ACTIVATED.
   POSITION 3: DOOR OPENS. RED LIGHTS OPERATE ONLY IF AMBER LIGHTS HAVE BEEN ACTIVATED.
   POSITION 2: DOOR CLOSES. RED LIGHTS OPERATE ONLY IF AMBER LIGHTS HAVE BEEN ACTIVATED.
   POSITION 1: DOOR CLOSED. RED LIGHTS OFF.

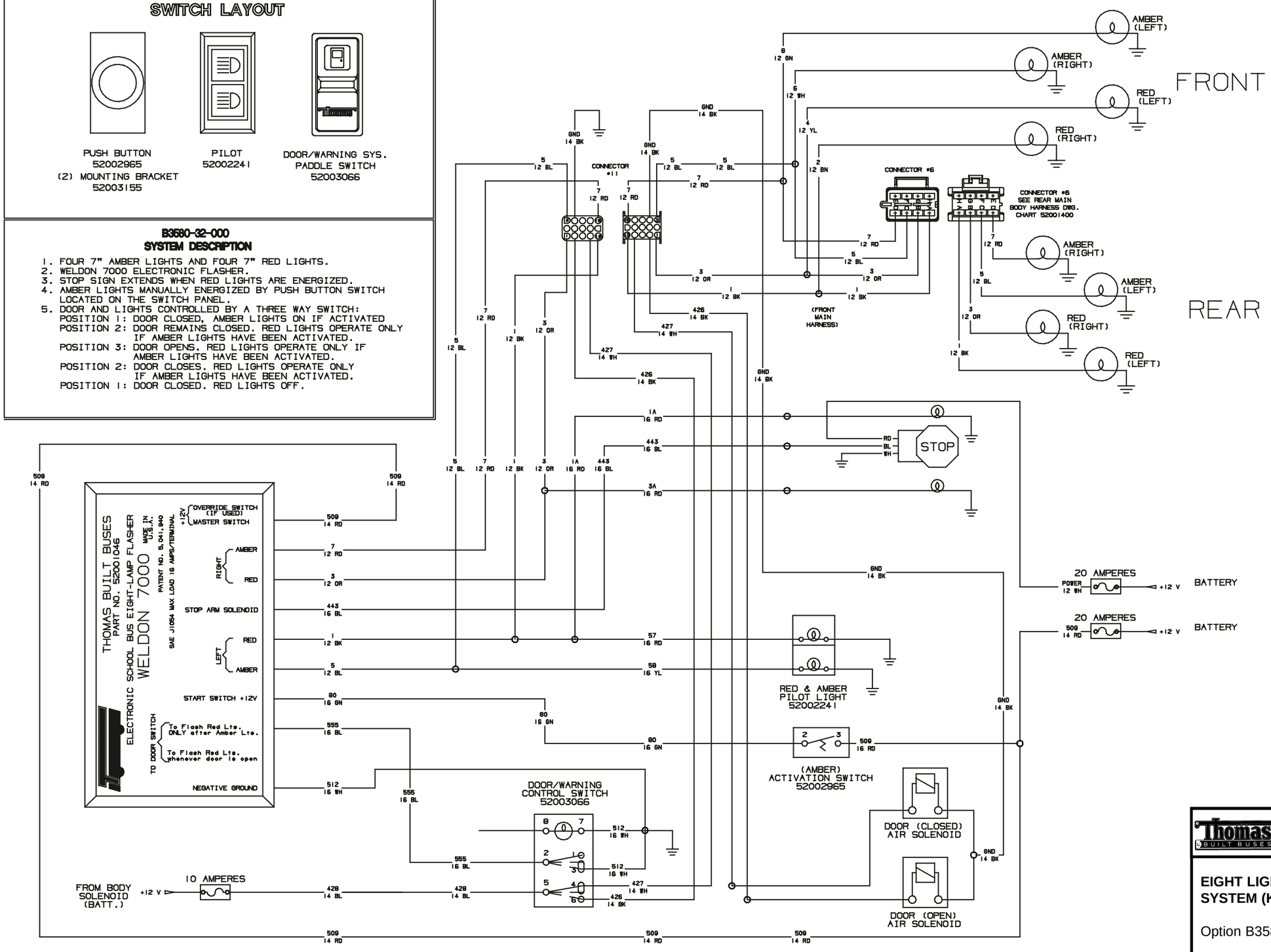

Thomas BUILT BUSES

52002890 D

EIGHT LIGHT WARNING SYSTEM (KENTUCKY)

Option B3580-32-000

NOTES:

MVP-ER
STOP SIGNS &
CROSSING GATES
SCHEMATICS

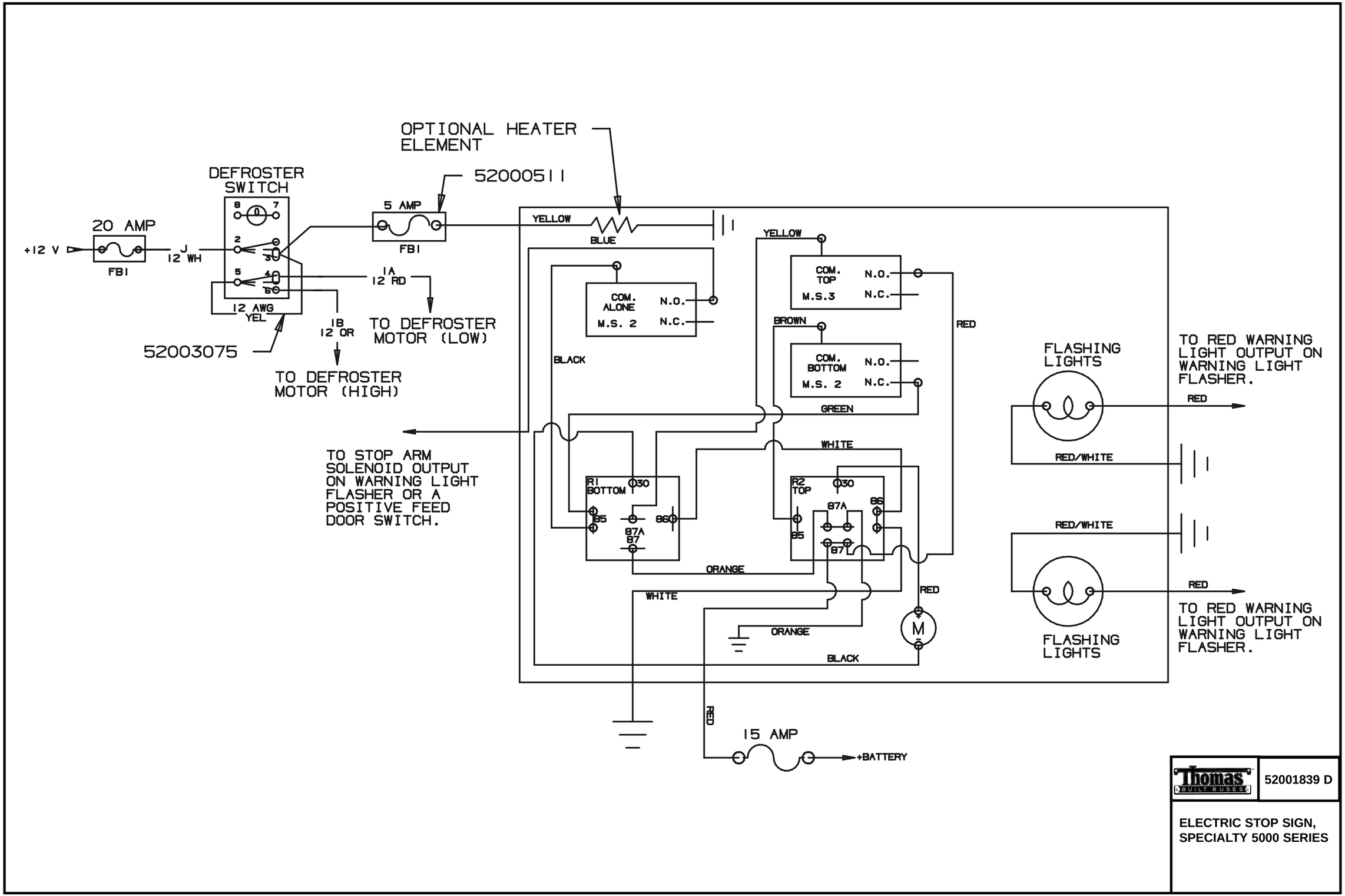
OPTIONAL HEATER ELEMENT
52000511
DEFROSTER SWITCH
20 AMP
+12 V
FB1
J
12 WH
5 AMP
FB1
YELLOW
BLUE
1A
12 RD
TO DEFROSTER MOTOR (LOW)
12 AWG YEL
1B
12 OR
TO DEFROSTER MOTOR (HIGH)
52003075
COM. ALONE
N.O.
M.S. 2
N.C.
YELLOW
COM. TOP
N.O.
M.S.3
N.C.
BROWN
COM. BOTTOM
N.O.
M.S. 2
N.C.
RED
BLACK
GREEN
WHITE
FLASHING LIGHTS
TO RED WARNING LIGHT OUTPUT ON WARNING LIGHT FLASHER.
RED
RED/WHITE
TO STOP ARM SOLENOID OUTPUT ON WARNING LIGHT FLASHER OR A POSITIVE FEED DOOR SWITCH.
R1 BOTTOM
30
85
86
87A
87
R2 TOP
30
87A
86
85
87
ORANGE
WHITE
RED
M
ORANGE
BLACK
RED/WHITE
RED
FLASHING LIGHTS
TO RED WARNING LIGHT OUTPUT ON WARNING LIGHT FLASHER.
RED
15 AMP
+BATTERY
Thomas BUILT BUSES
52001839 D
ELECTRIC STOP SIGN, SPECIALTY 5000 SERIES

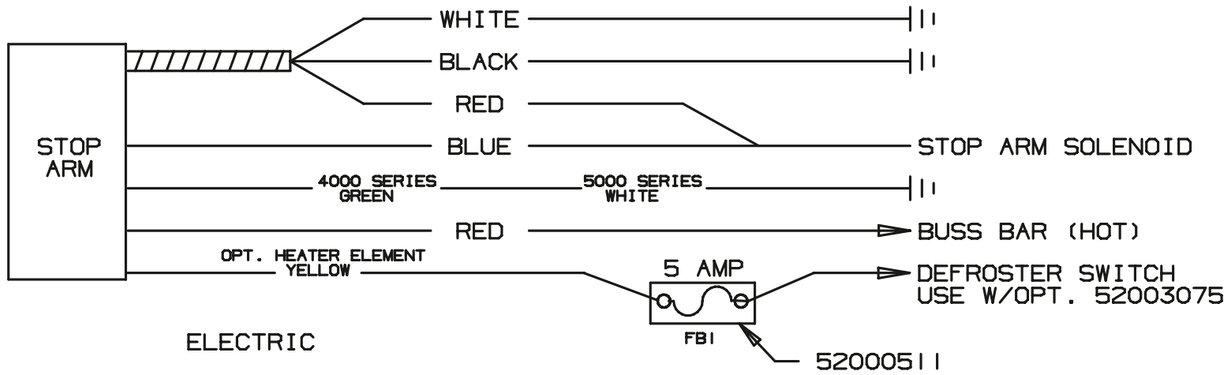

SINGLE STROBE
LIGHT OPERATION

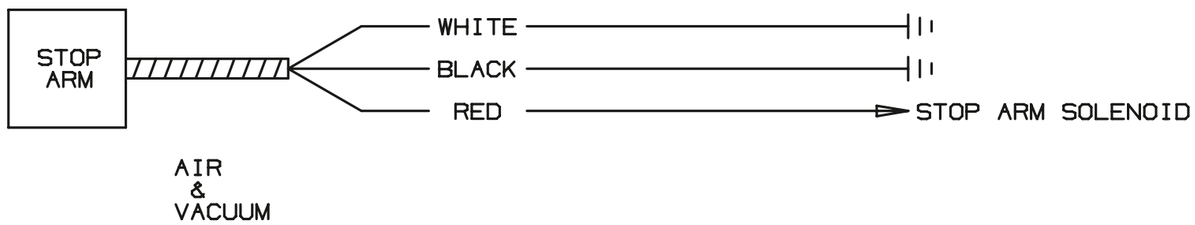

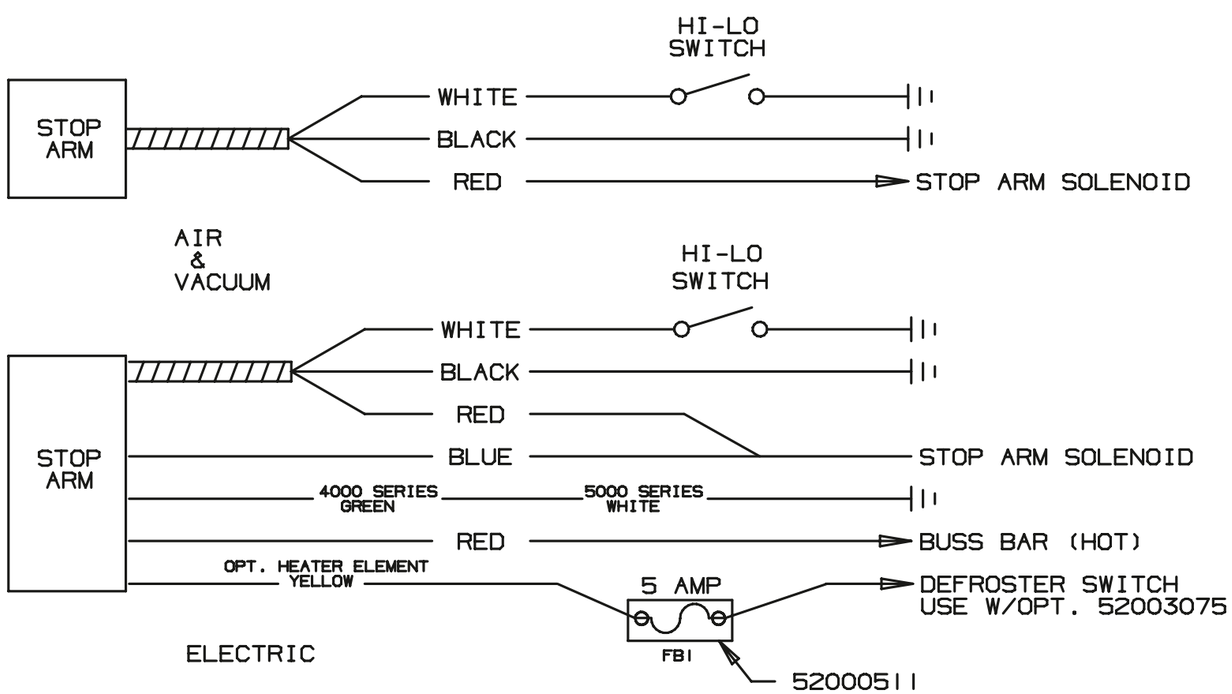

HI-LOW STROBE
LIGHT OPERATION

CIRCUIT OPERATION
OPEN-LOW INTENSITY
CLOSED-HIGH INTENSITY

Thomas BUILT BUSES

52001536 D

STOP ARM STROBE LIGHT, SINGLE AND H/L OPERATION, ELECTRIC, AIR & VACUUM

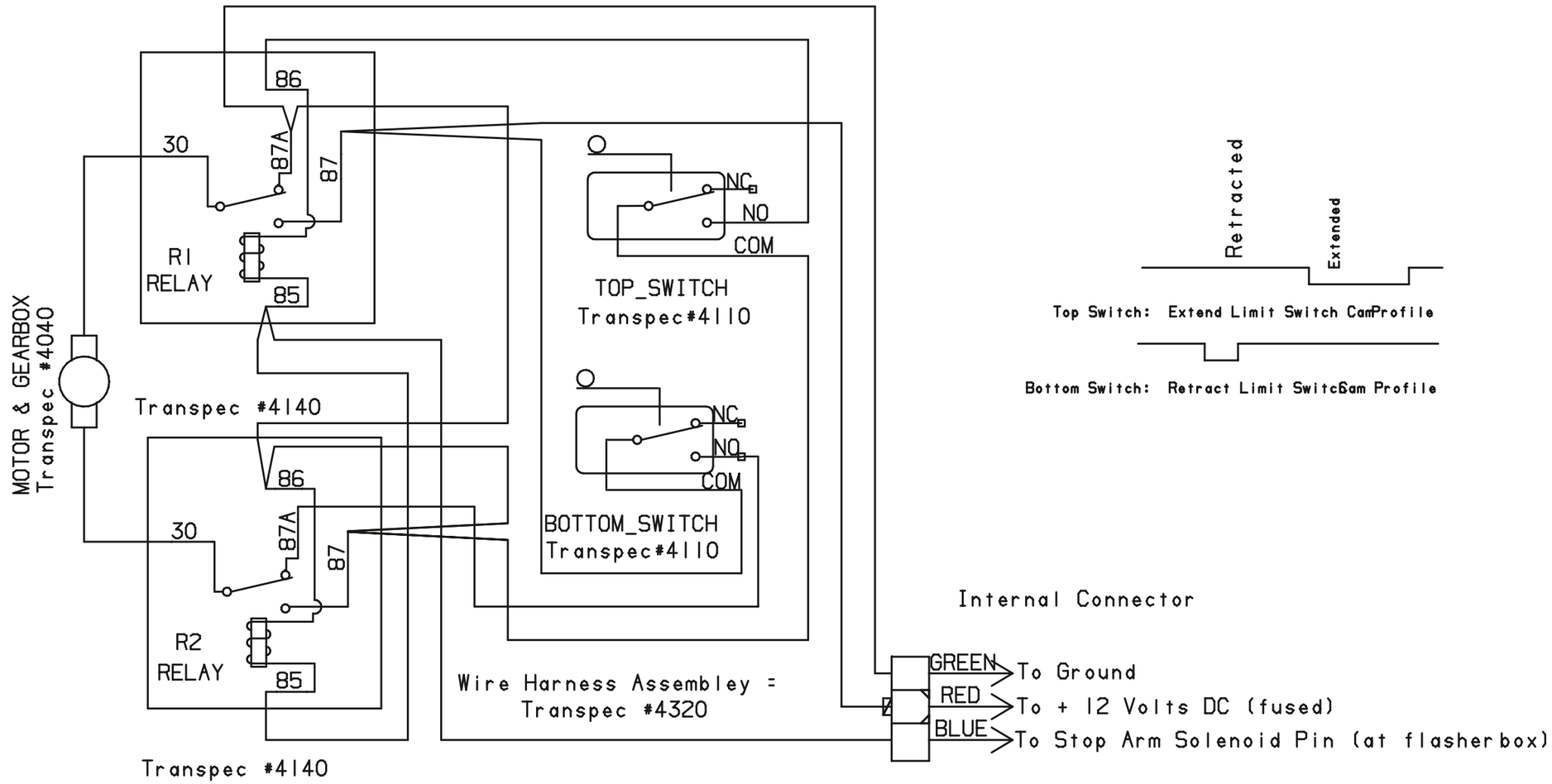

TRANSPEC SAFTY STOP
WIREING CONNECTIONS
For [3] Wire harnesses

MOTOR WIRE HARNESS
blue wire to activation or stop arm solenoid pin at flasher box
red wire to +12VDC fused or master pin at flasher box
green wire to ground

LIGHT WIRE HARNESS
one white wire to right +12 VDC flasher or right red pin at flasher box
one white wire to left +12 VDC flasher or left red pin at flasher box
[with tracer]
one black wire to ground
NOTE:
This is a running change that will supersede the [4] wire harness and
should be fully instituded by 1/1/97

Thomas BUILT BUSES

52002690 A

ELECTRICAL STOP ARM
TRANSPEC w/LED'S, 3
WIRE HARNESS

TRANSPEC SAFTY STOP
WIRING CONNECTIONS
For [4] Wire Harnesses
MOTOR WIRE HARNESS

blue wire	to activation or stop arm solenoid pin at flasher box
red wire	to +12 VDC fused or master switch pin at flasher box
green wire	to ground
white wire	to ground

Note: be sure NOT to use one of the two white wries from the light wire harness [wrapped together with tape]

LIGHT WIRE HARNESS

two white wires	one to right +12 VDC flasher or right red pin at flasher box one to left +12 VDC flasher or left red pin at flasher box
two black wires	to ground

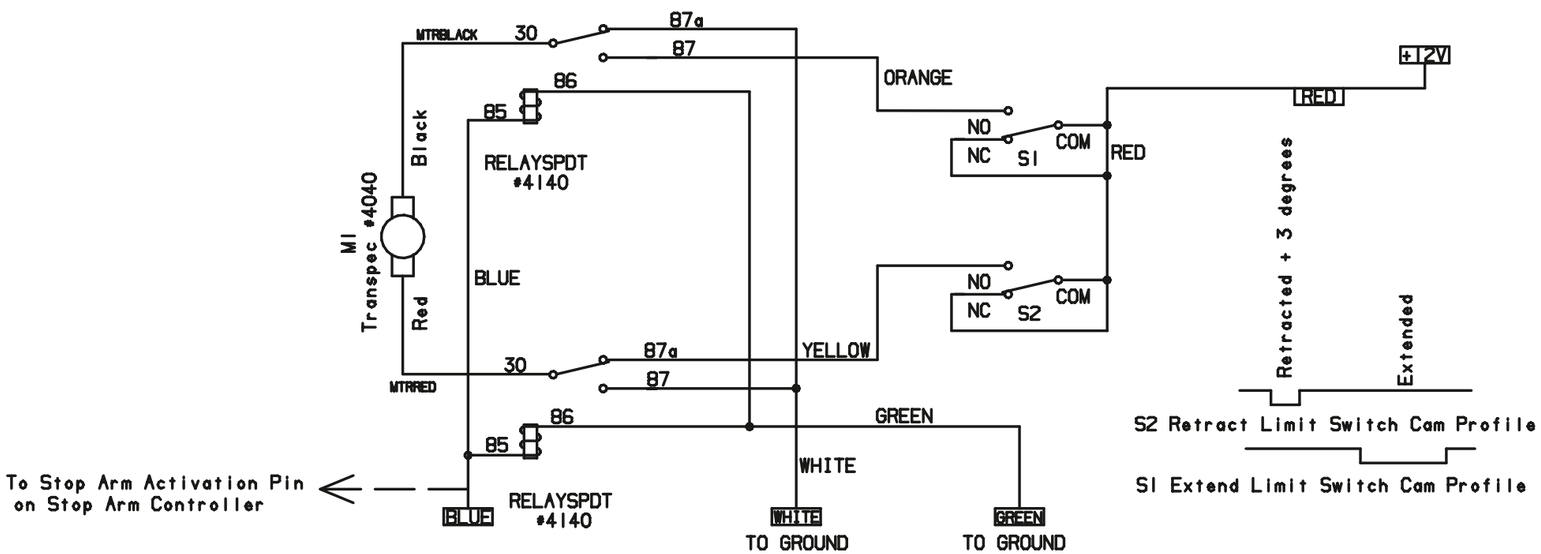

All wiring to be at least 18 AWG or larger excpt wires for relay coils which must be 16 AWG or larger per Weldon controller requirements

SCALE1/1

Thomas BUILT BUSES

52002689 A

ELECTRICAL STOP ARM TRANSPEC w/LED'S, 4 WIRE HARNESS

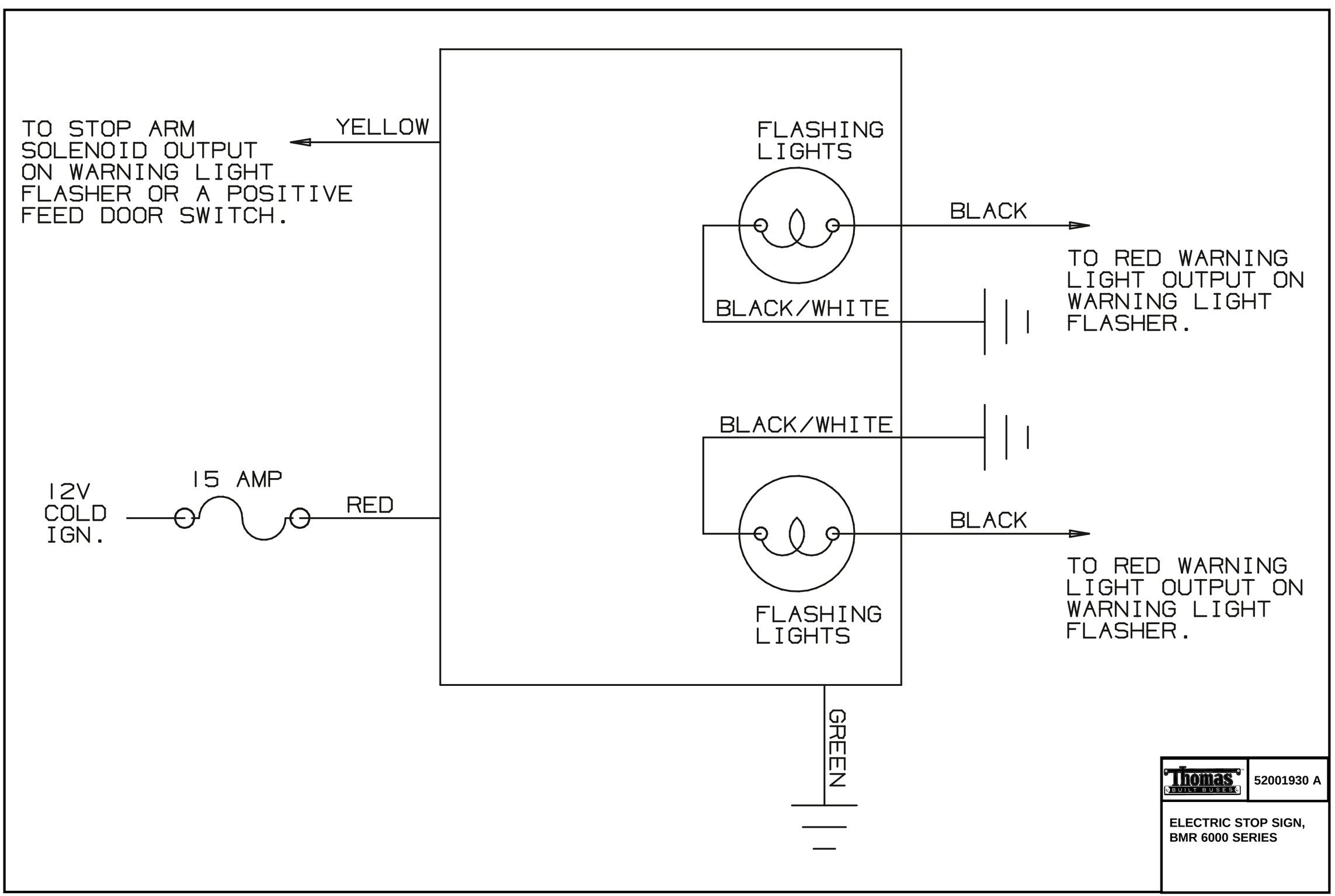
TO STOP ARM SOLENOID OUTPUT ON WARNING LIGHT FLASHER OR A POSITIVE FEED DOOR SWITCH.
YELLOW
FLASHING LIGHTS
BLACK
TO RED WARNING LIGHT OUTPUT ON WARNING LIGHT FLASHER.
BLACK/WHITE
BLACK/WHITE
12V COLD IGN.
15 AMP
RED
BLACK
TO RED WARNING LIGHT OUTPUT ON WARNING LIGHT FLASHER.
FLASHING LIGHTS
GREEN
Thomas BUILT BUSES
52001930 A
ELECTRIC STOP SIGN, BMR 6000 SERIES

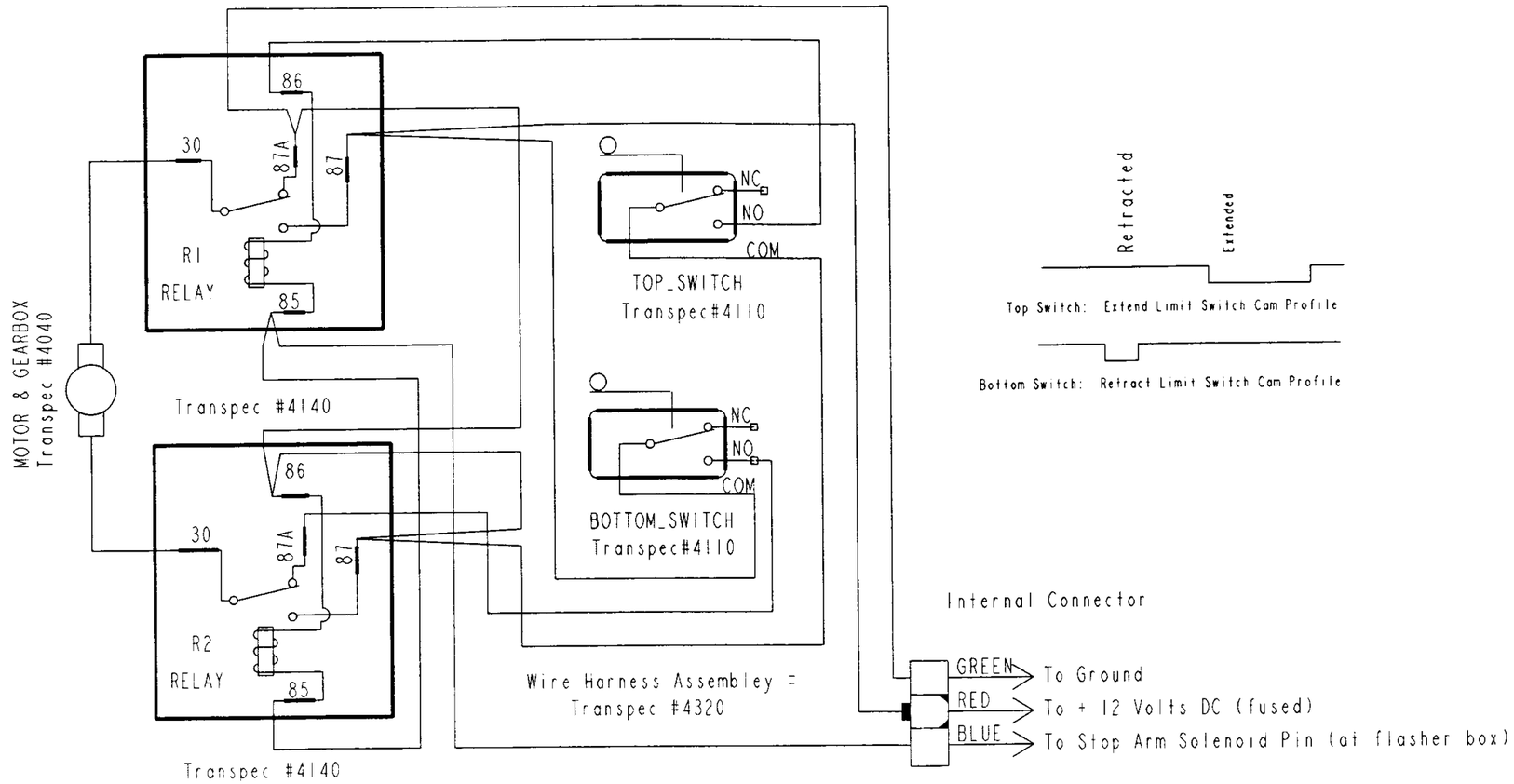

NOTES:
1) MATERIAL:VENDOR PART# STOP AND CROSSING ARM CIRCUIT
2) BLANK SIZE:N/A
3) CALCULATED WEIGHT:N/A
4) BURR REQUIREMENT:N/A
5) FINISH:N/A
6) COLOR:N/A
7) TENSILE AND/OR IMPACT STRENGTH:N/A
8) HIGH/LOW TEMPERATURE PERFORMANCE:N/A
9) SURFACE GRAIN TEXTURE:NA/

Thomas BUILT BUSES

52002845 A

STOP AND CROSSING ARM

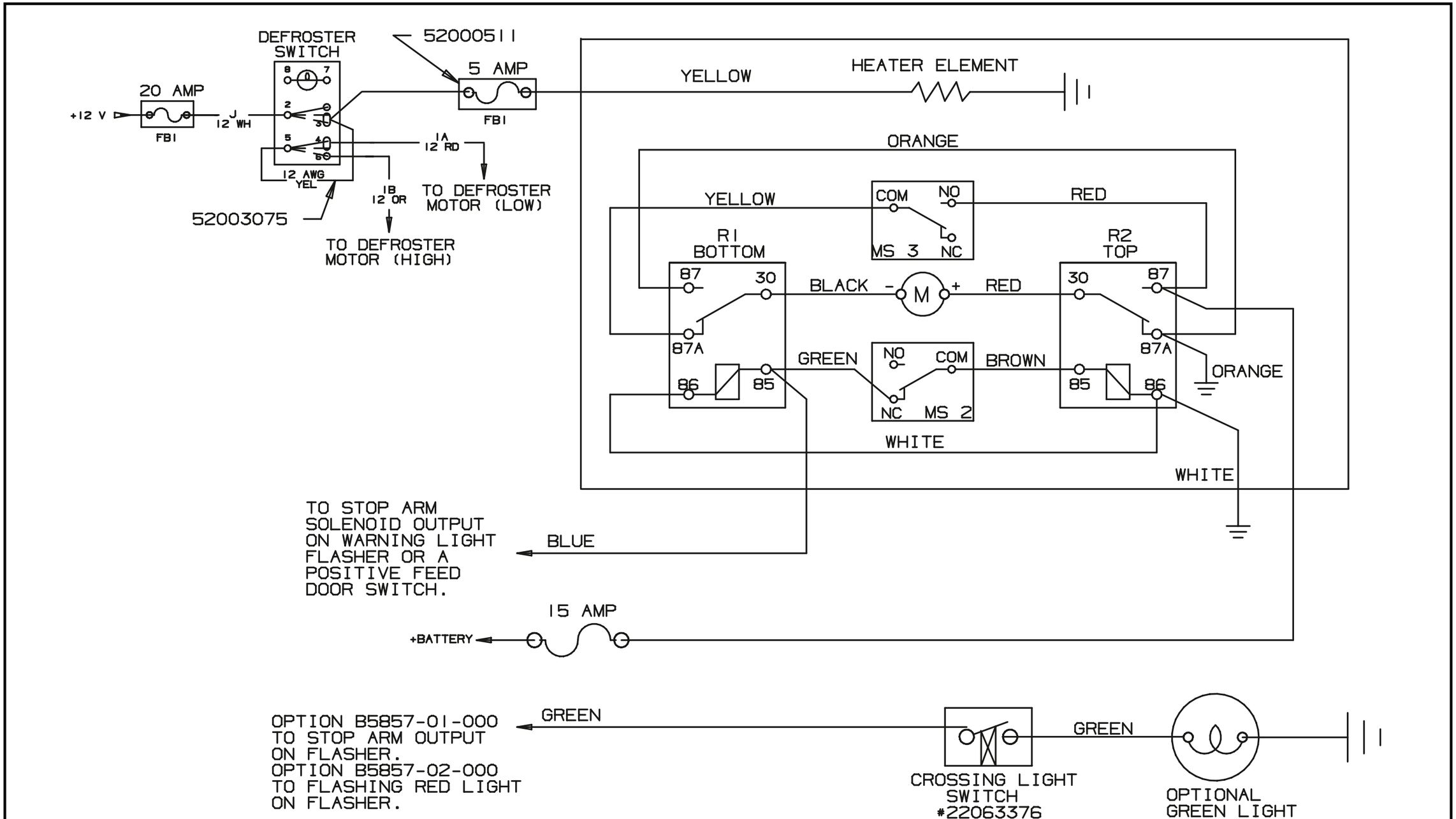

Thomas BUILT BUSES

52001897 E

ELECTRIC CROSSING CONTROL ARM 5000 SERIES

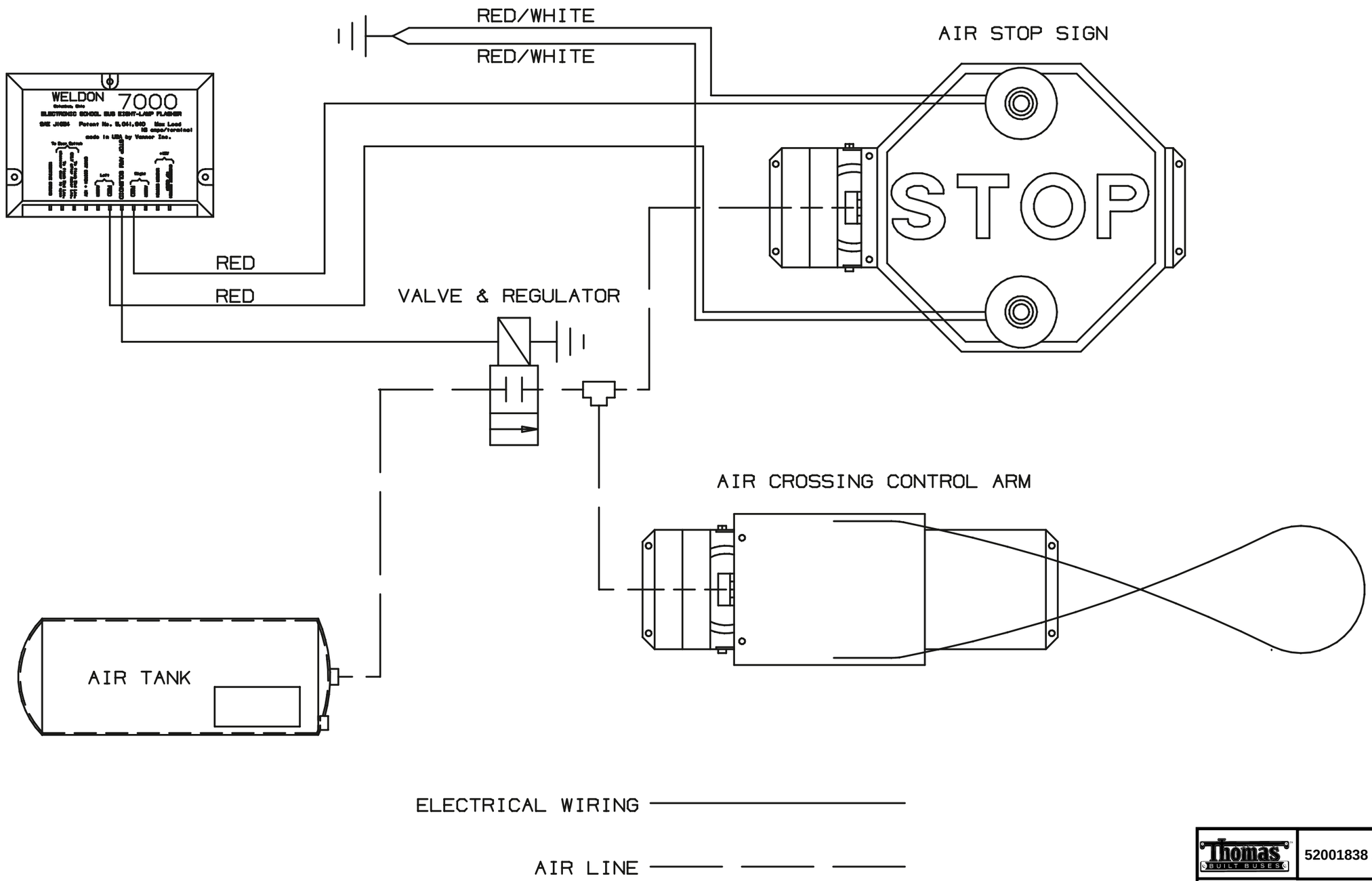

Thomas BUILT BUSES

52001838 A

AIR STOP SIGN & AIR CROSSING CONTROL ARM

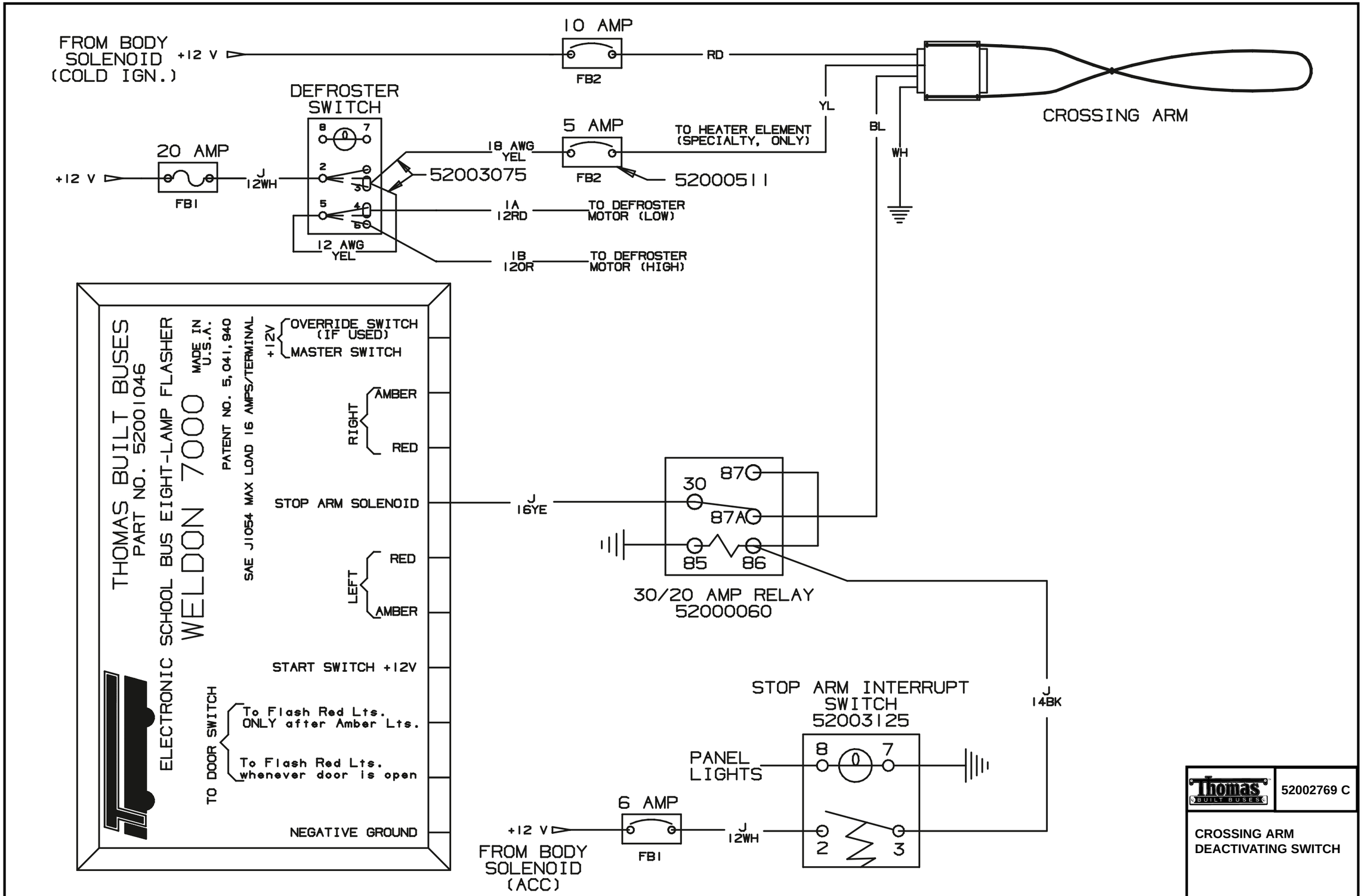
FROM BODY SOLENOID (COLD IGN.)
+12 V
10 AMP
FB2
RD
CROSSING ARM
DEFROSTER SWITCH
20 AMP
+12 V
FB1
J 12WH
18 AWG YEL
5 AMP
FB2
TO HEATER ELEMENT (SPECIALTY, ONLY)
YL
BL
WH
52003075
52000511
1A 12RD
TO DEFROSTER MOTOR (LOW)
12 AWG YEL
1B 12OR
TO DEFROSTER MOTOR (HIGH)
THOMAS BUILT BUSES
PART NO. 52001046
ELECTRONIC SCHOOL BUS EIGHT-LAMP FLASHER
WELDON 7000
MADE IN U.S.A.
PATENT NO. 5,041,940
SAE J1054 MAX LOAD 16 AMPS/TERMINAL
+12V
OVERRIDE SWITCH (IF USED)
MASTER SWITCH
RIGHT
AMBER
RED
STOP ARM SOLENOID
LEFT
RED
AMBER
START SWITCH +12V
TO DOOR SWITCH
To Flash Red Lts. ONLY after Amber Lts.
To Flash Red Lts. whenever door is open
NEGATIVE GROUND
J 16YE
30
87
87A
85
86
30/20 AMP RELAY
52000060
STOP ARM INTERRUPT SWITCH
52003125
J 14BK
PANEL LIGHTS
8
7
2
3
6 AMP
FB1
+12 V
FROM BODY SOLENOID (ACC)
J 12WH
Thomas BUILT BUSES
52002769 C
CROSSING ARM DEACTIVATING SWITCH

MVP-ER
HEATER
SCHEMATICS

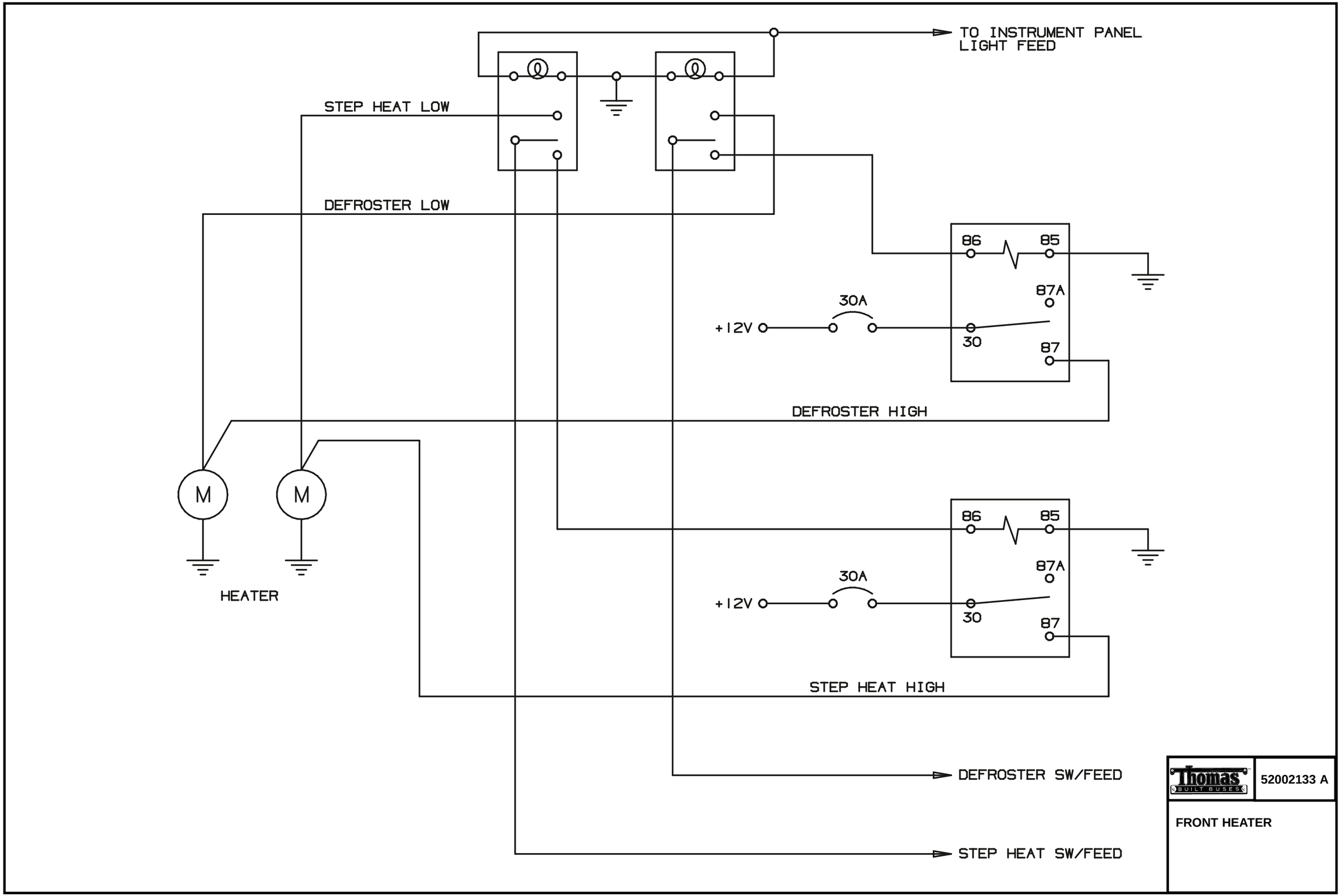
TO INSTRUMENT PANEL
LIGHT FEED
STEP HEAT LOW
DEFROSTER LOW
86
85
87A
30A
+12V
30
87
DEFROSTER HIGH
M
M
HEATER
86
85
87A
30A
+12V
30
87
STEP HEAT HIGH
DEFROSTER SW/FEED
STEP HEAT SW/FEED
Thomas
BUILT BUSES
52002133 A
FRONT HEATER

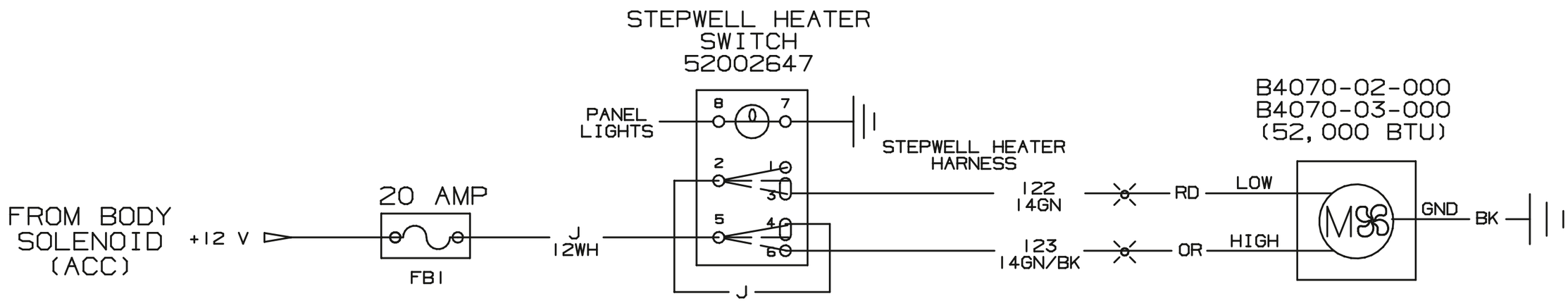

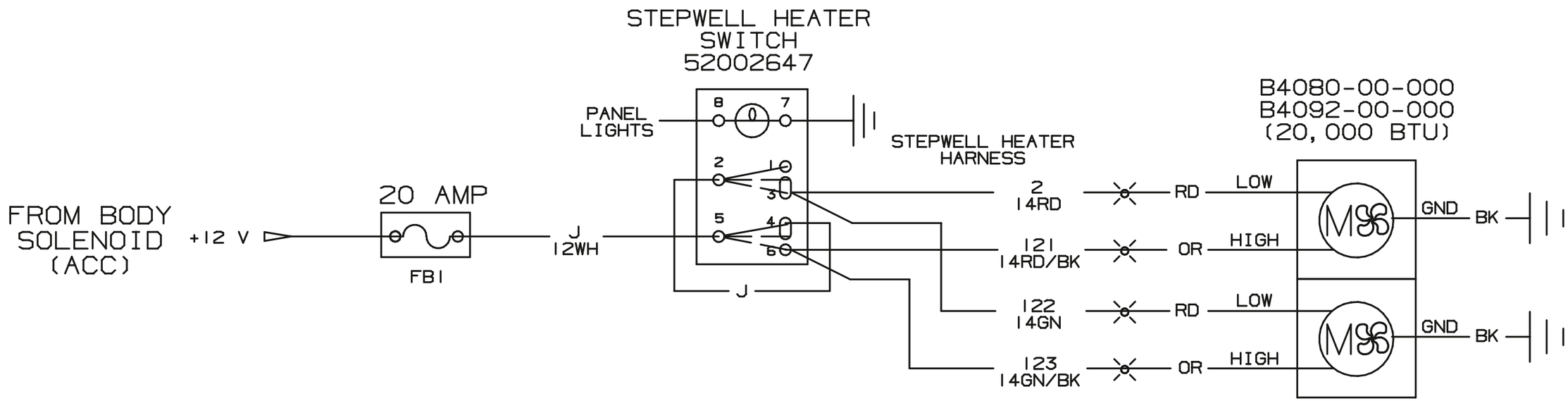

Thomas BUILT BUSES

62202663 A

STEPWELL HEATER

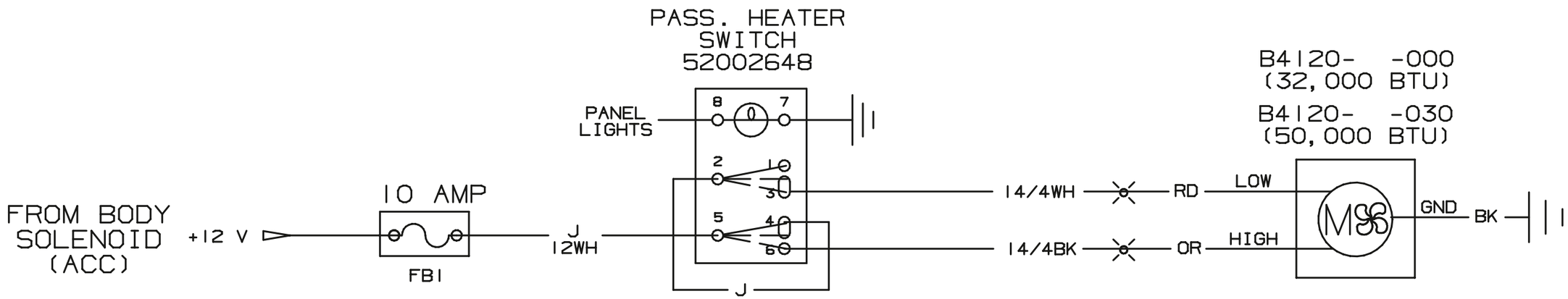

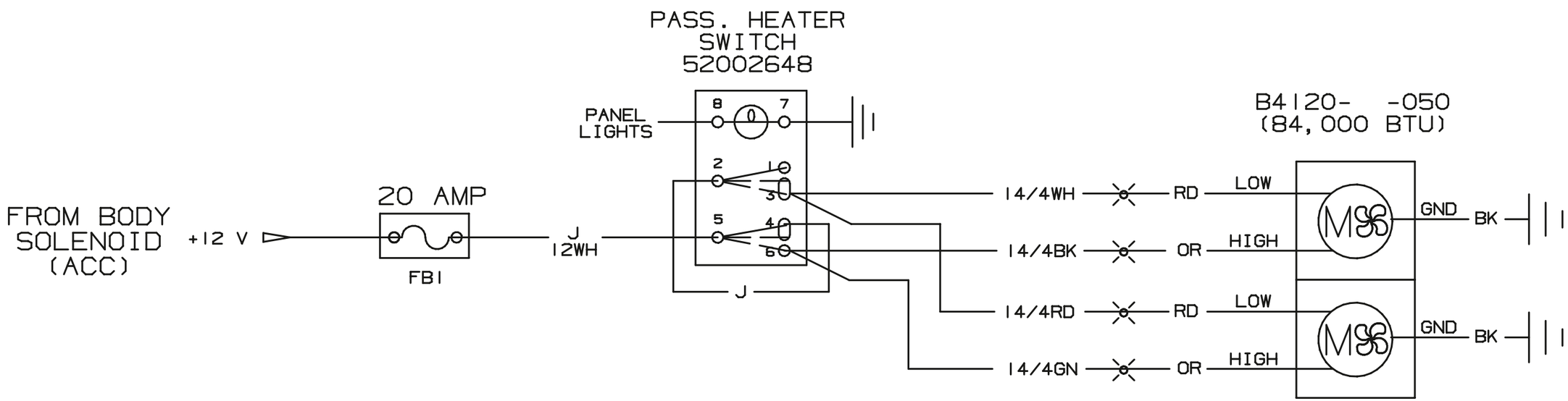

Thomas BUILT BUSES

52002662 A

UNDERSEAT HEATERS

MVP-ER
AIR CONDITIONING
SCHEMATICS

CIRCUIT BREAKER COLOR CODE
20 AMP - YELLOW DOT
30 AMP - GREEN DOT
40 AMP - RED DOT

CIRCUIT BREAKER IDENTIFICATION

TYPE III MANUAL RESET-RESETS WHEN EXTERNAL BUTTON IS PUSHED.

TYPE II - RESETS WHEN OVERCURRENT IS CORRECTED OR REMOVED.

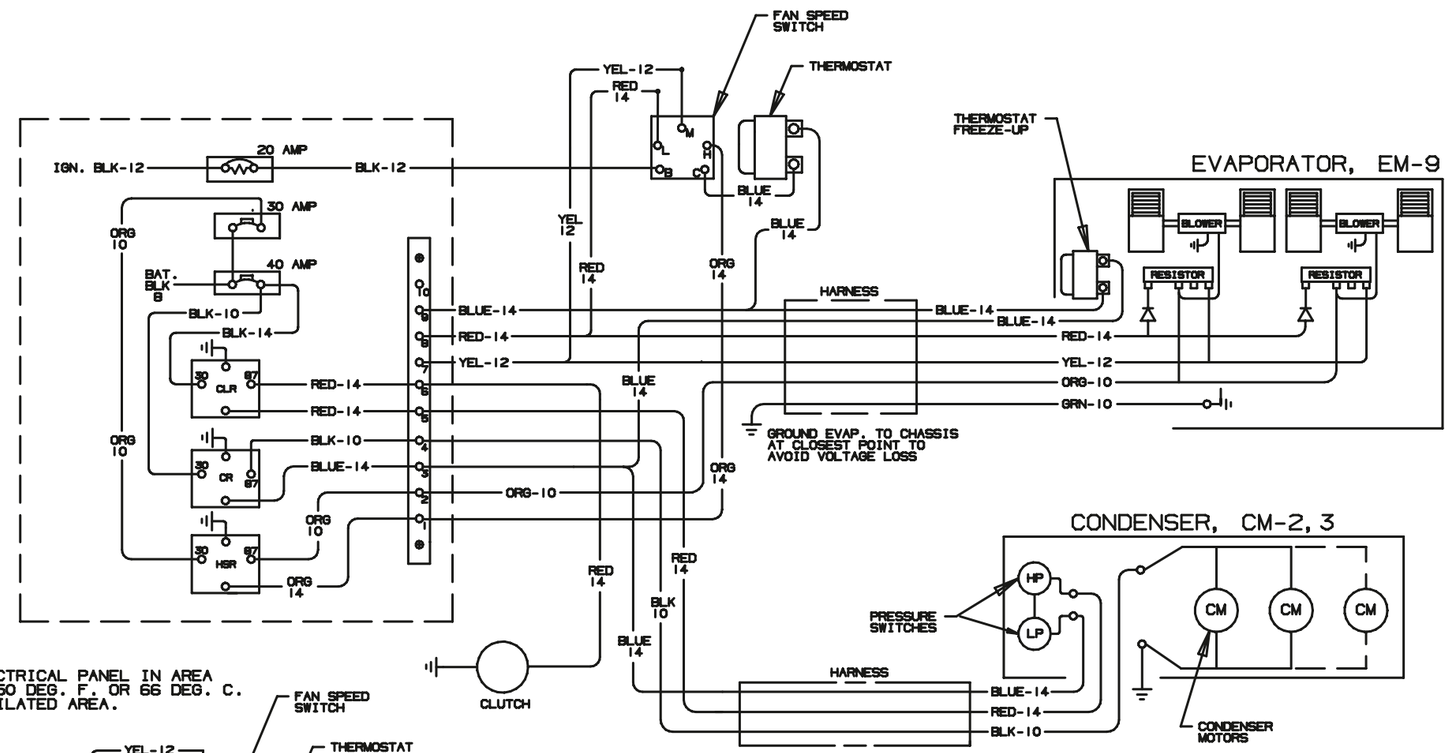

NOTE: DO NOT INSTALL ELECTRICAL PANEL IN AREA THAT WILL EXCEED 150 DEG. F. OR 66 DEG. C. LOCATE IN DRY VENTILATED AREA.

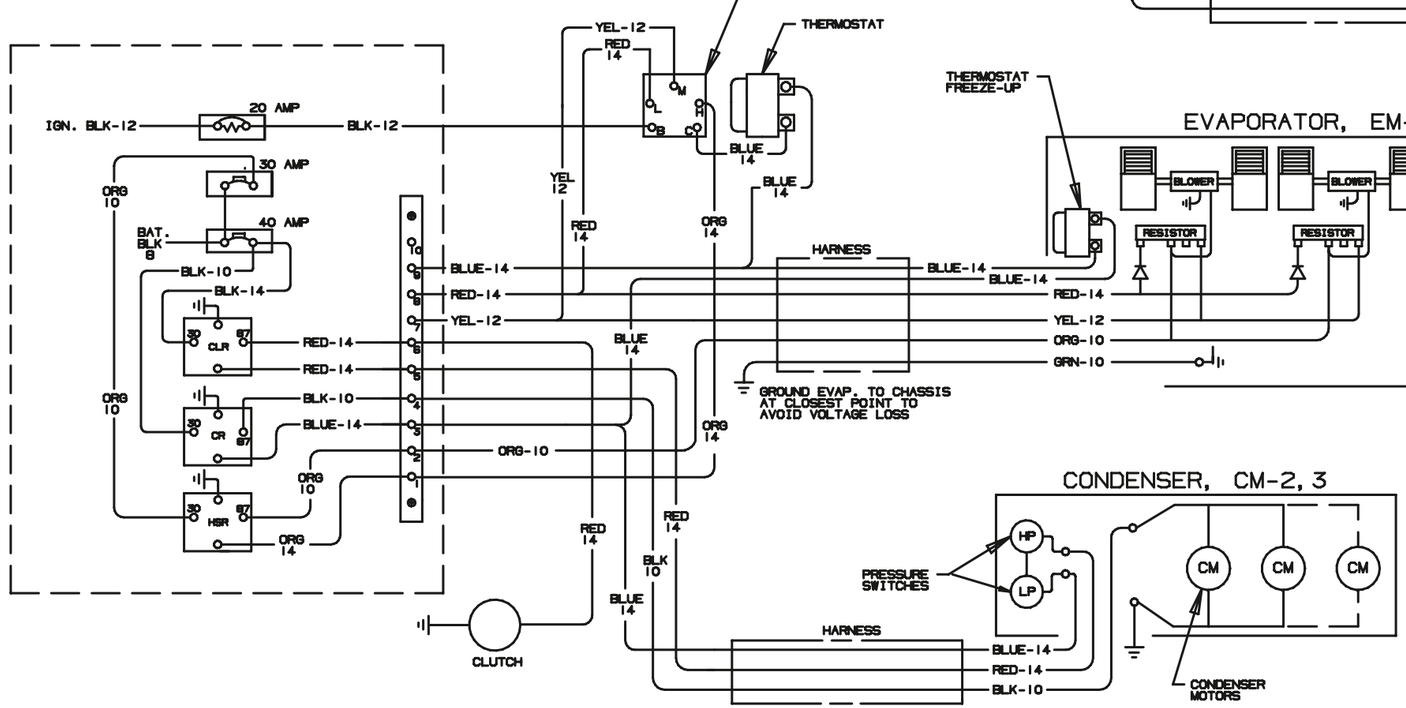

Thomas BUILT BUSES

52002138 B

AIR CONDITIONING
DC-1052, 1053

NOTE: DISCONNECT OEM DASH AIR CLUTCH WIRE WHEN WIRING A/C SYSTEM (UNLESS WIRING MAX SYSTEM)

NOTE: DO NOT INSTALL ELECTRICAL PANEL IN AREA THAT WILL EXCEED 150 DEG. F OR 66 DEG. C. LOCATE IN A DRY VENTILATED AREA.

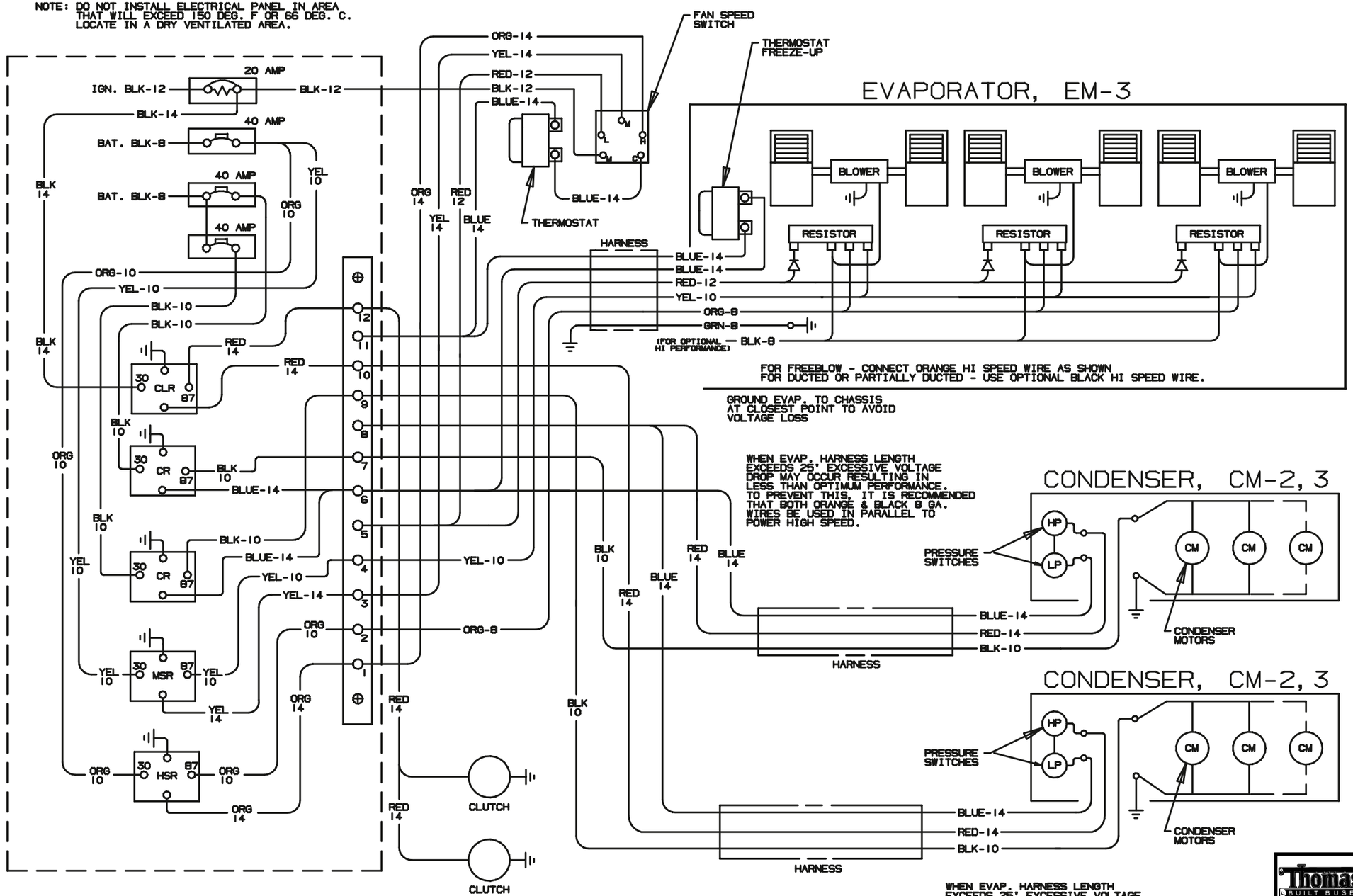

CIRCUIT BREAKER COLOR CODE
20 AMP - YELLOW DOT
30 AMP - GREEN DOT
40 AMP - RED DOT

CIRCUIT BREAKER IDENTIFICATION

TYPE III MANUAL RESET-RESETS WHEN EXTERNAL BUTTON IS PUSHED.

TYPE II - RESETS WHEN OVERCURRENT IS CORRECTED OR REMOVED.

Thomas BUILT BUSES

52002135 B

AIR CONDITIONING
DC-1052, 1053

NOTES:

MVP-ER
DOOR
SCHEMATICS

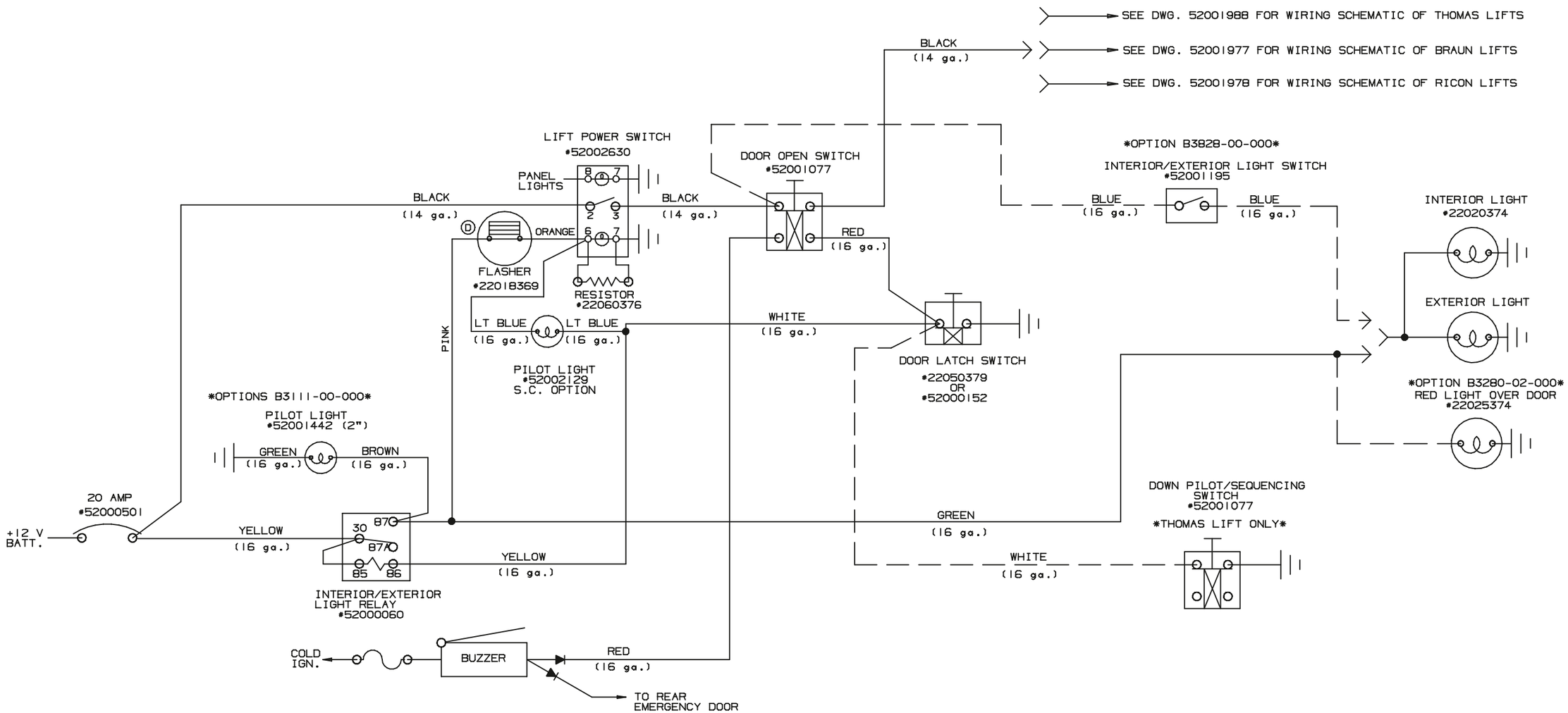

NOTES:
1.)SCHEMATIC INCLUDES OPTIONS:
B3828-00-000 INTERIOR/EXTERIOR LIGHT SWITCH
B3280-02-000 RED LIGHT OVER DOOR
B3111-00-000 LIFT DOOR PILOT LIGHT (2")

Thomas BUILT BUSES

52001989 E

LIFT DOOR

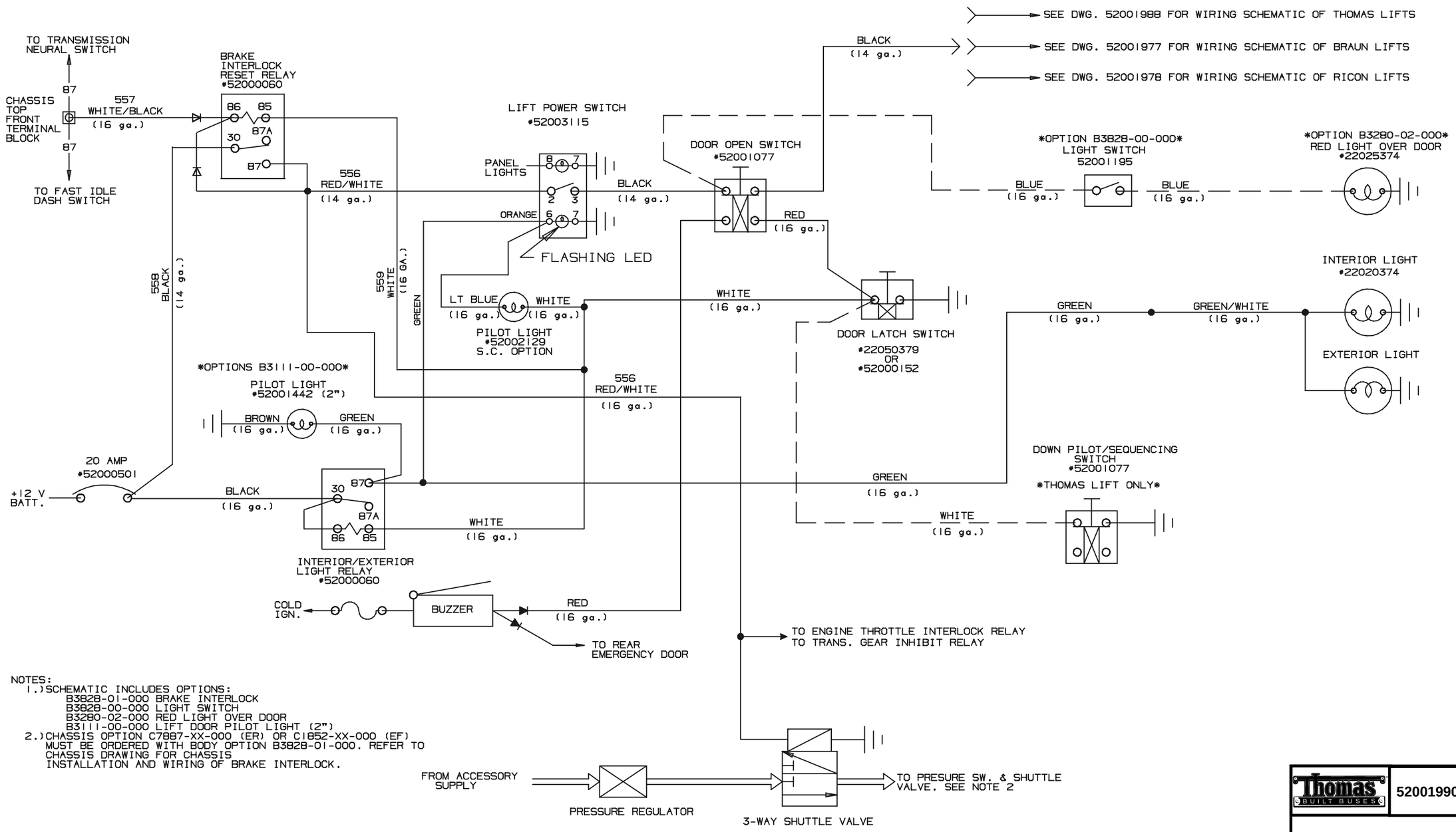

NOTES:
1.)SCHEMATIC INCLUDES OPTIONS:
B3828-01-000 BRAKE INTERLOCK
B3828-00-000 LIGHT SWITCH
B3280-02-000 RED LIGHT OVER DOOR
B3111-00-000 LIFT DOOR PILOT LIGHT (2")
2.)CHASSIS OPTION C7887-XX-000 (ER) OR C1852-XX-000 (EF) MUST BE ORDERED WITH BODY OPTION B3828-01-000. REFER TO CHASSIS DRAWING FOR CHASSIS INSTALLATION AND WIRING OF BRAKE INTERLOCK.

Thomas BUILT BUSES

52001990 H

LIFT DOOR w/BRAKE INTERLOCK

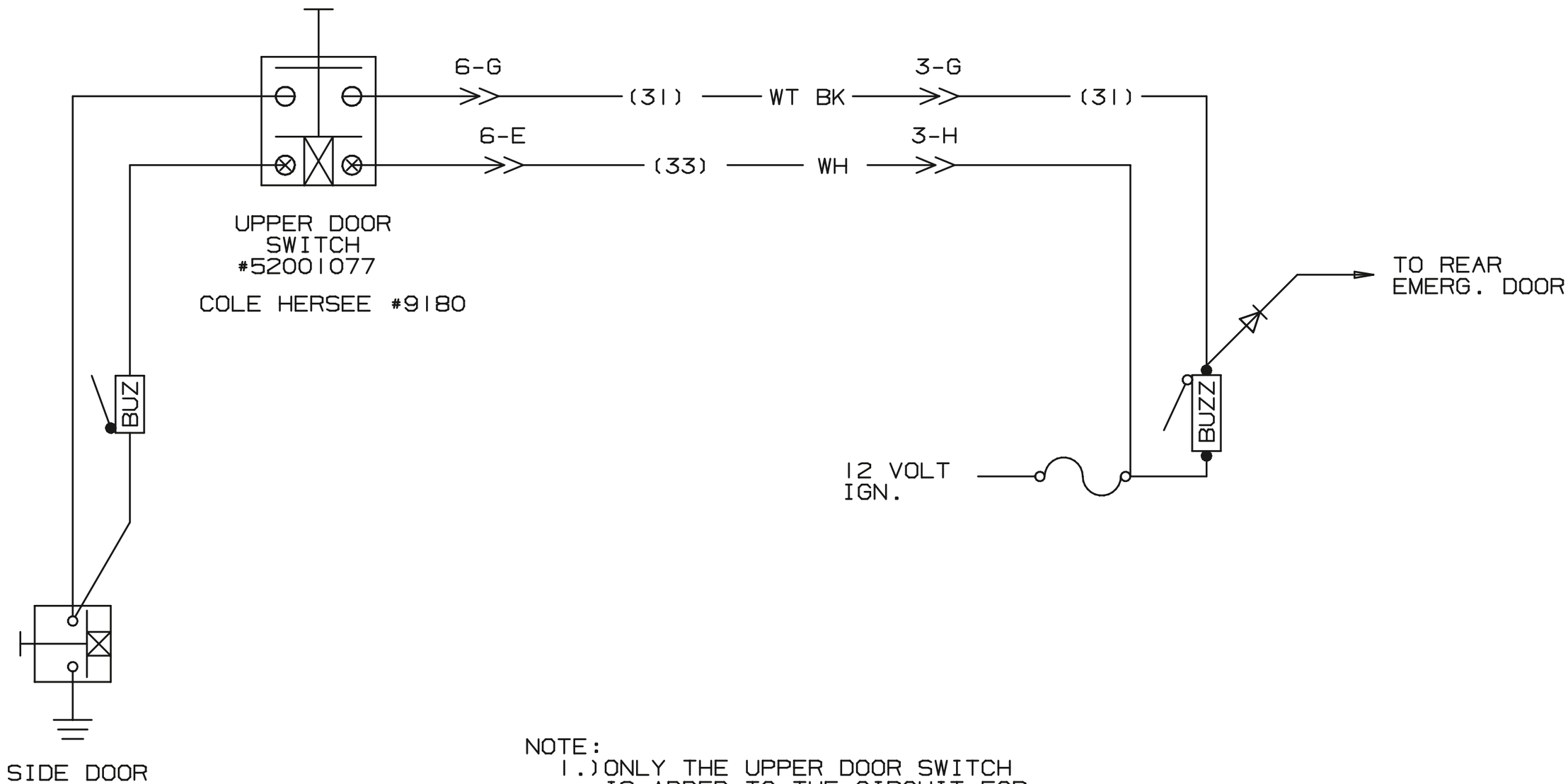

NOTE:
1.) ONLY THE UPPER DOOR SWITCH IS ADDED TO THE CIRCUIT FOR THIS OPTION.

Thomas BUILT BUSES

52002025 B

LOADING DOOR BUZZER SHUT-OFF SWITCH

Option B3110-01-000

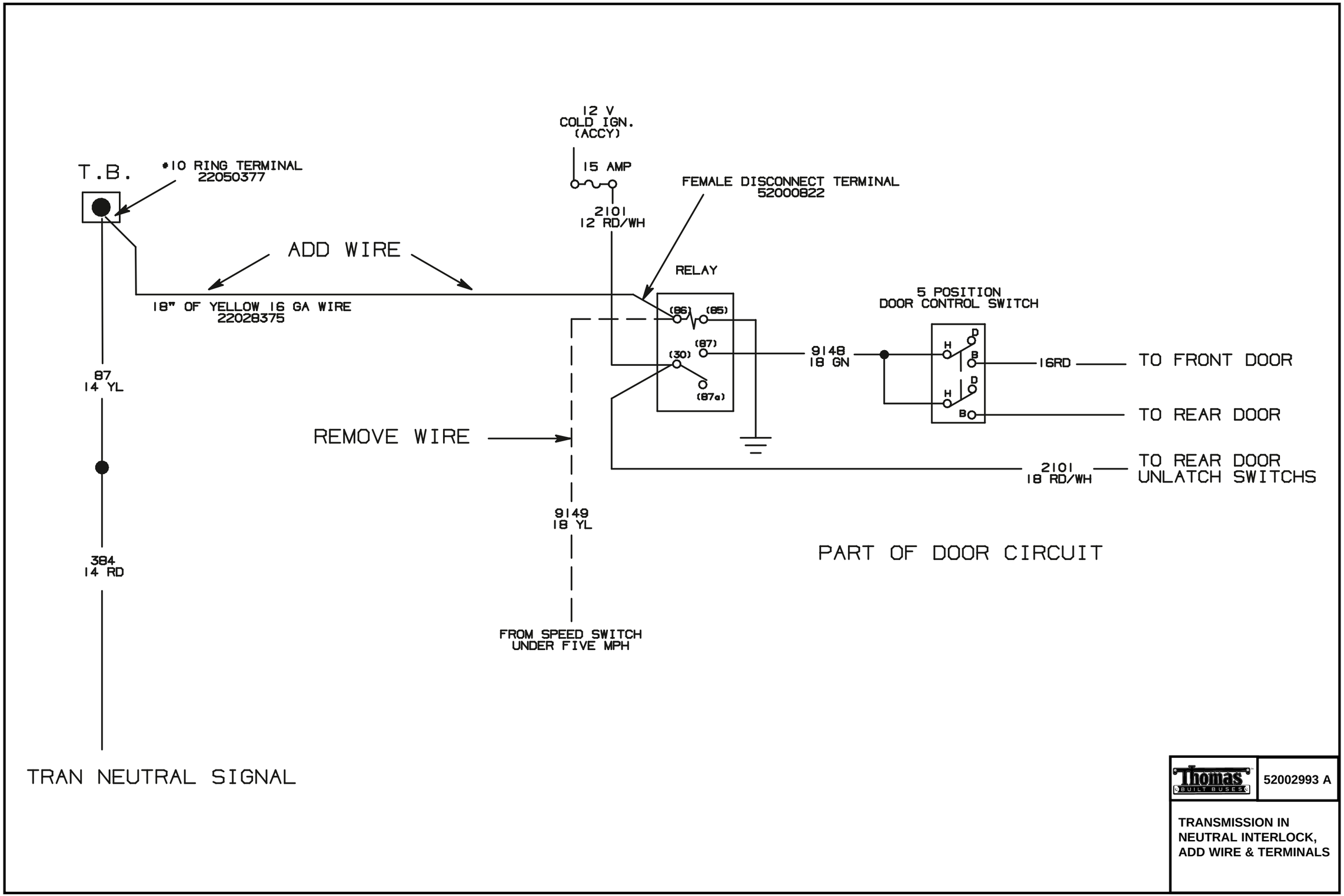
12 V
COLD IGN.
(ACCY)
15 AMP
2101
12 RD/WH
T.B.
#10 RING TERMINAL
22050377
FEMALE DISCONNECT TERMINAL
52000822
ADD WIRE
RELAY
18" OF YELLOW 16 GA WIRE
22028375
(86)
(85)
(87)
(30)
(87a)
5 POSITION
DOOR CONTROL SWITCH
9148
18 GN
H
D
B
16RD
TO FRONT DOOR
TO REAR DOOR
87
14 YL
REMOVE WIRE
2101
18 RD/WH
TO REAR DOOR
UNLATCH SWITCHS
9149
18 YL
PART OF DOOR CIRCUIT
384
14 RD
FROM SPEED SWITCH
UNDER FIVE MPH
TRAN NEUTRAL SIGNAL
Thomas BUILT BUSES
52002993 A
TRANSMISSION IN
NEUTRAL INTERLOCK,
ADD WIRE & TERMINALS

DOOR SWITCH WIRING

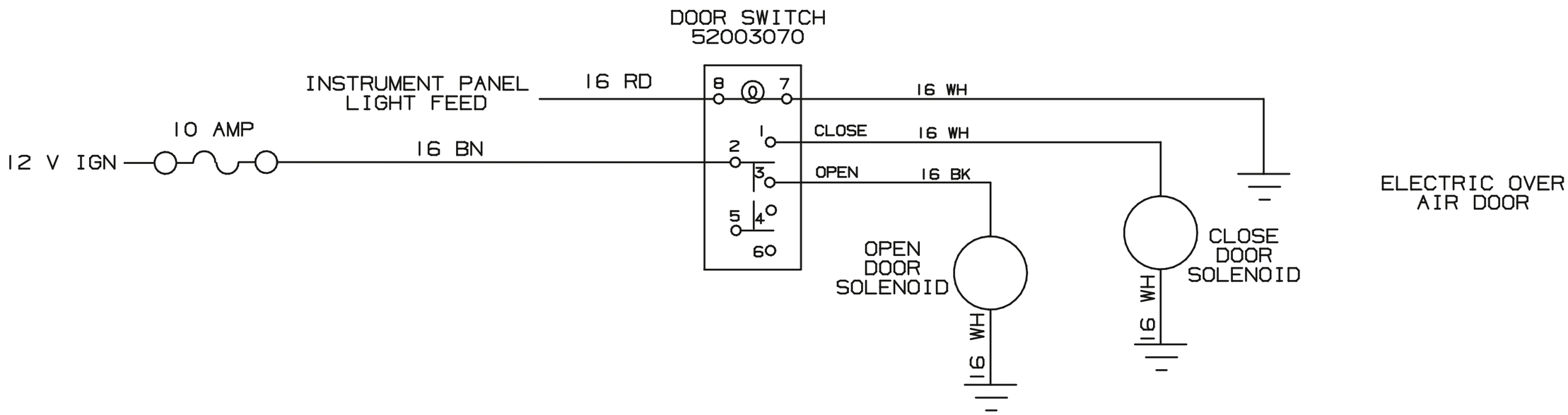

52003095 B

DOOR CONTROL 2 POSITION, NO INTER-LOCK

Option: B5016-22-000

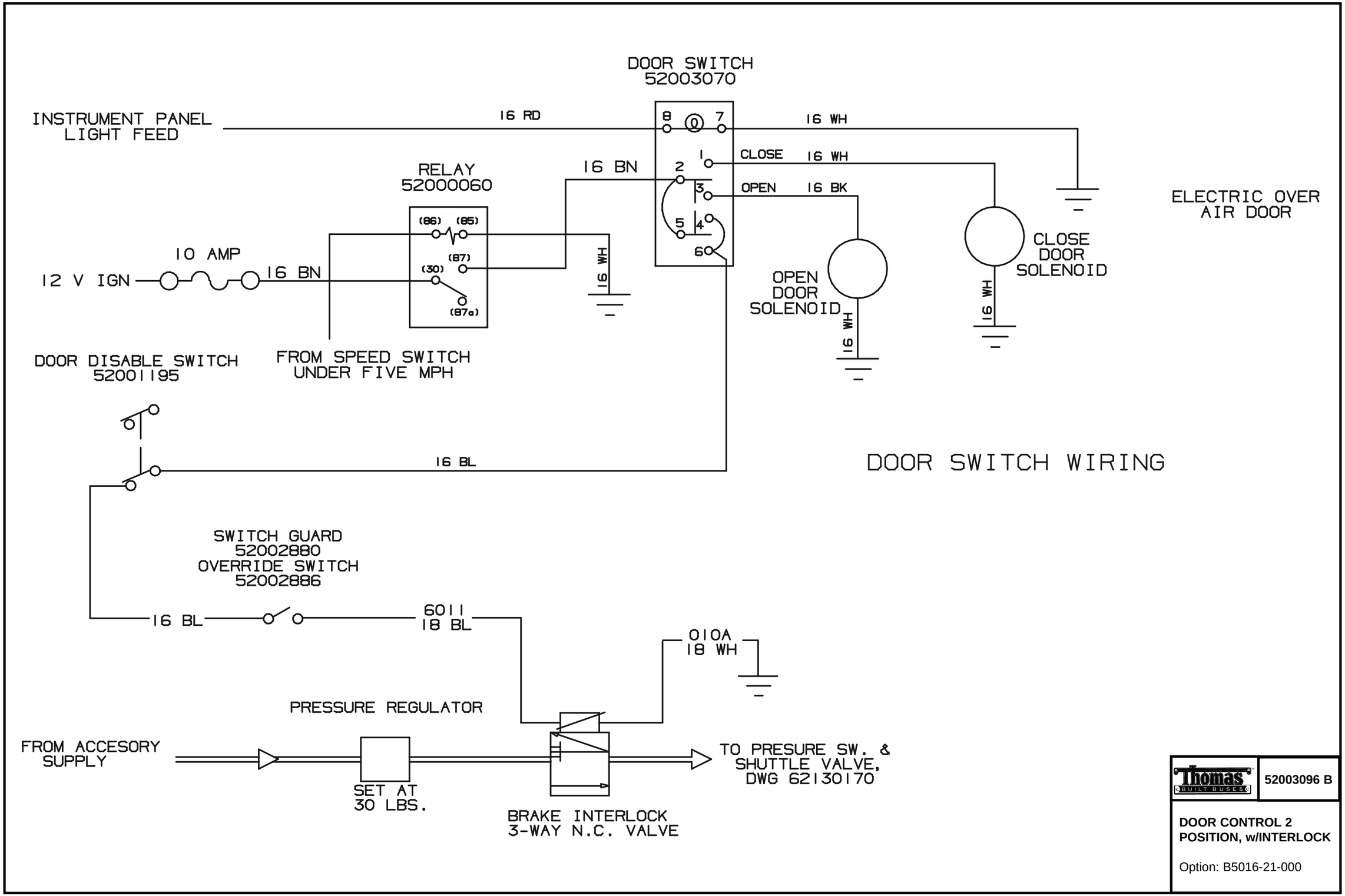
DOOR SWITCH
52003070
INSTRUMENT PANEL
LIGHT FEED
16 RD
8
7
16 WH
1
CLOSE
16 WH
2
16 BN
3
OPEN
16 BK
5
4
6
RELAY
52000060
(86)
(85)
(87)
(30)
(87a)
10 AMP
12 V IGN
16 BN
16 WH
OPEN
DOOR
SOLENOID
16 WH
CLOSE
DOOR
SOLENOID
16 WH
ELECTRIC OVER
AIR DOOR
DOOR DISABLE SWITCH
52001195
FROM SPEED SWITCH
UNDER FIVE MPH
16 BL
DOOR SWITCH WIRING
SWITCH GUARD
52002880
OVERRIDE SWITCH
52002886
16 BL
6011
18 BL
010A
18 WH
PRESSURE REGULATOR
FROM ACCESORY
SUPPLY
SET AT
30 LBS.
BRAKE INTERLOCK
3-WAY N.C. VALVE
TO PRESURE SW. &
SHUTTLE VALVE,
DWG 62130170
Thomas
BUILT BUSES
52003096 B
DOOR CONTROL 2
POSITION, w/INTERLOCK
Option: B5016-21-000

DOOR SWITCH WIRING

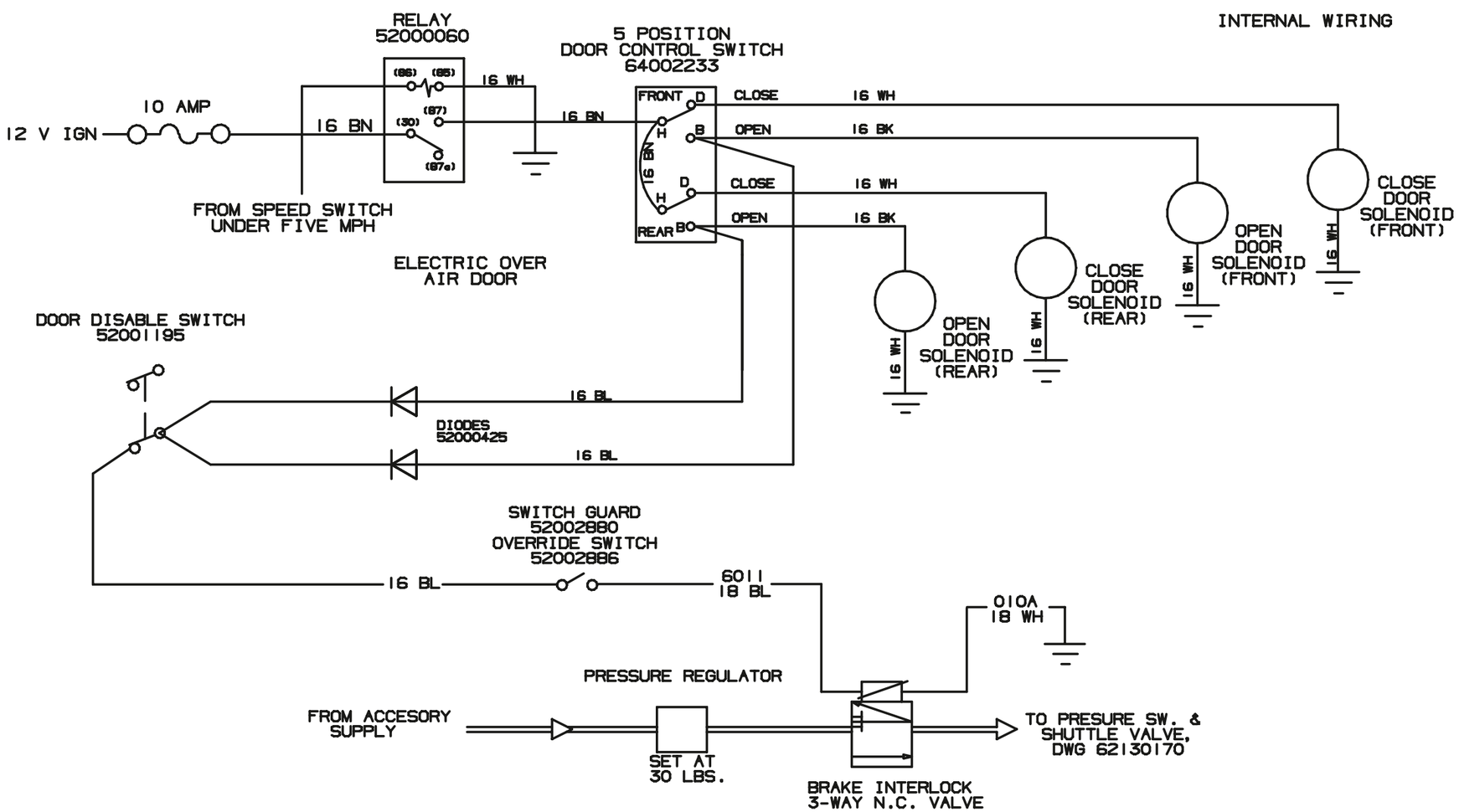

5 POSITION SWITCH

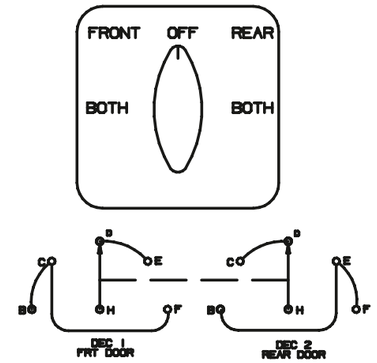

	5 POSITION SWITCH OUTPUT	
	FRONT	REAR
OFF CENTER POS.	H D B	H D B
REAR DOOR ONLY (1ST RIGHT POS)	H D B	H D B
BOTH FRONT & REAR DOOR (2ND RIGT POS.)	H D B	H D B
FRONT DOOR ONLY (1ST LFT POS.)	H D B	H D B
BOTH FRONT & REAR DOOR (2ND LFT DOOR)	H D B	H D B

Thomas BUILT BUSES

52003098 A

DOOR CONTROL 5 POSITION, w/INTERLOCK

Option: B5016-16-000

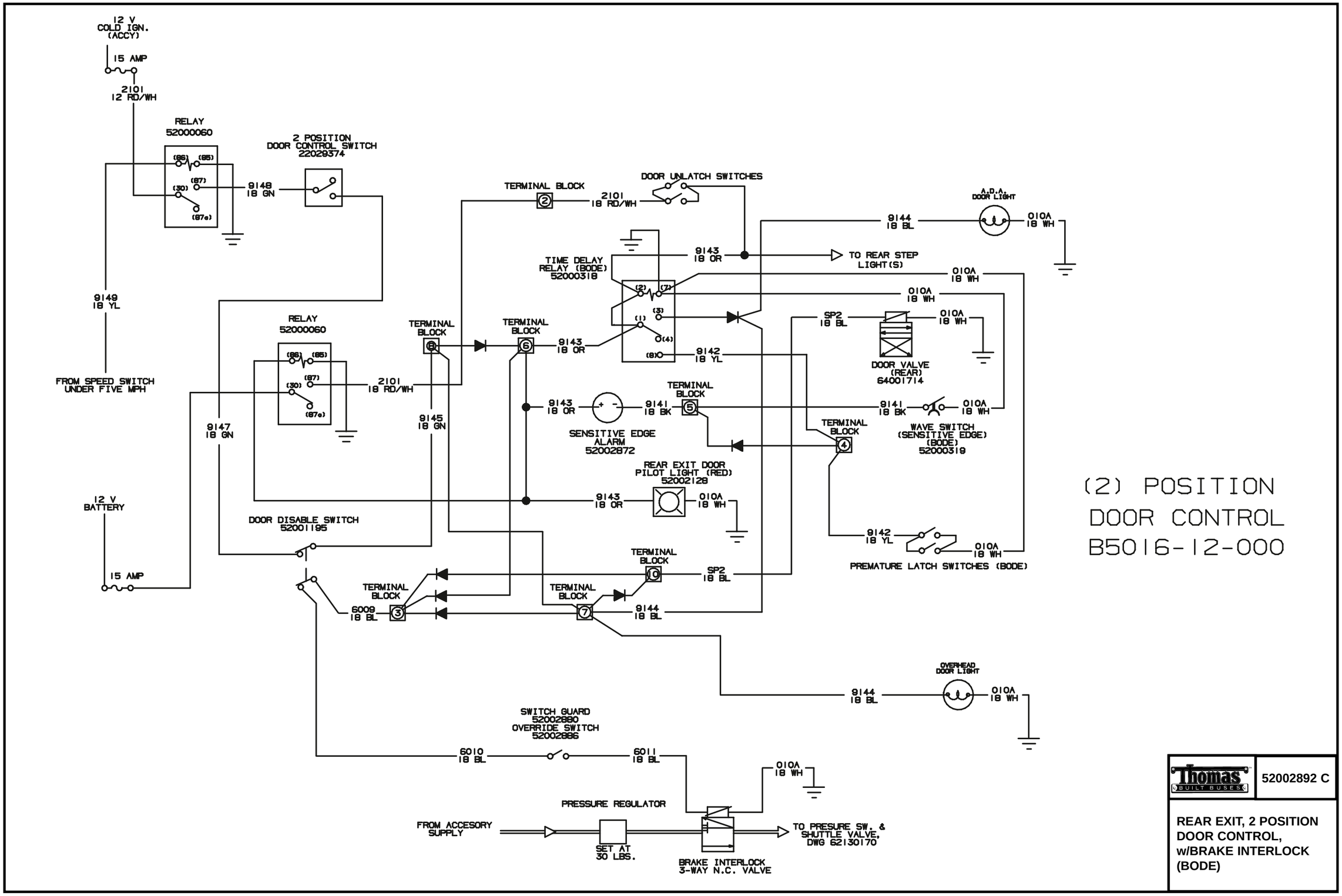
12 V
COLD IGN.
(ACCY)
15 AMP
2101
12 RD/WH
RELAY
52000060
2 POSITION
DOOR CONTROL SWITCH
22029374
9148
18 GN
9149
18 YL
FROM SPEED SWITCH
UNDER FIVE MPH
RELAY
52000060
2101
18 RD/WH
9147
18 GN
12 V
BATTERY
15 AMP
DOOR DISABLE SWITCH
52001195
TERMINAL BLOCK
TERMINAL BLOCK
TERMINAL BLOCK
9145
18 GN
TERMINAL BLOCK
2101
18 RD/WH
DOOR UNLATCH SWITCHES
TIME DELAY
RELAY (BODE)
52000318
9143
18 OR
9143
18 OR
9142
18 YL
9143
18 OR
9141
18 BK
TERMINAL BLOCK
SENSITIVE EDGE
ALARM
52002872
REAR EXIT DOOR
PILOT LIGHT (RED)
52002128
9143
18 OR
010A
18 WH
TERMINAL BLOCK
SP2
18 BL
TERMINAL BLOCK
6009
18 BL
TERMINAL BLOCK
9144
18 BL
9144
18 BL
A.D.A.
DOOR LIGHT
010A
18 WH
TO REAR STEP
LIGHT(S)
010A
18 WH
010A
18 WH
SP2
18 BL
010A
18 WH
DOOR VALVE
(REAR)
64001714
9141
18 BK
010A
18 WH
TERMINAL BLOCK
WAVE SWITCH
(SENSITIVE EDGE)
(BODE)
52000319
9142
18 YL
010A
18 WH
PREMATURE LATCH SWITCHES (BODE)
OVERHEAD
DOOR LIGHT
9144
18 BL
010A
18 WH
SWITCH GUARD
52002880
OVERRIDE SWITCH
52002886
6010
18 BL
6011
18 BL
010A
18 WH
PRESSURE REGULATOR
FROM ACCESORY
SUPPLY
SET AT
30 LBS.
BRAKE INTERLOCK
3-WAY N.C. VALVE
TO PRESURE SW. &
SHUTTLE VALVE,
DWG 62130170
(2) POSITION
DOOR CONTROL
B5016-12-000
Thomas
BUILT BUSES
52002892 C
REAR EXIT, 2 POSITION
DOOR CONTROL,
w/BRAKE INTERLOCK
(BODE)

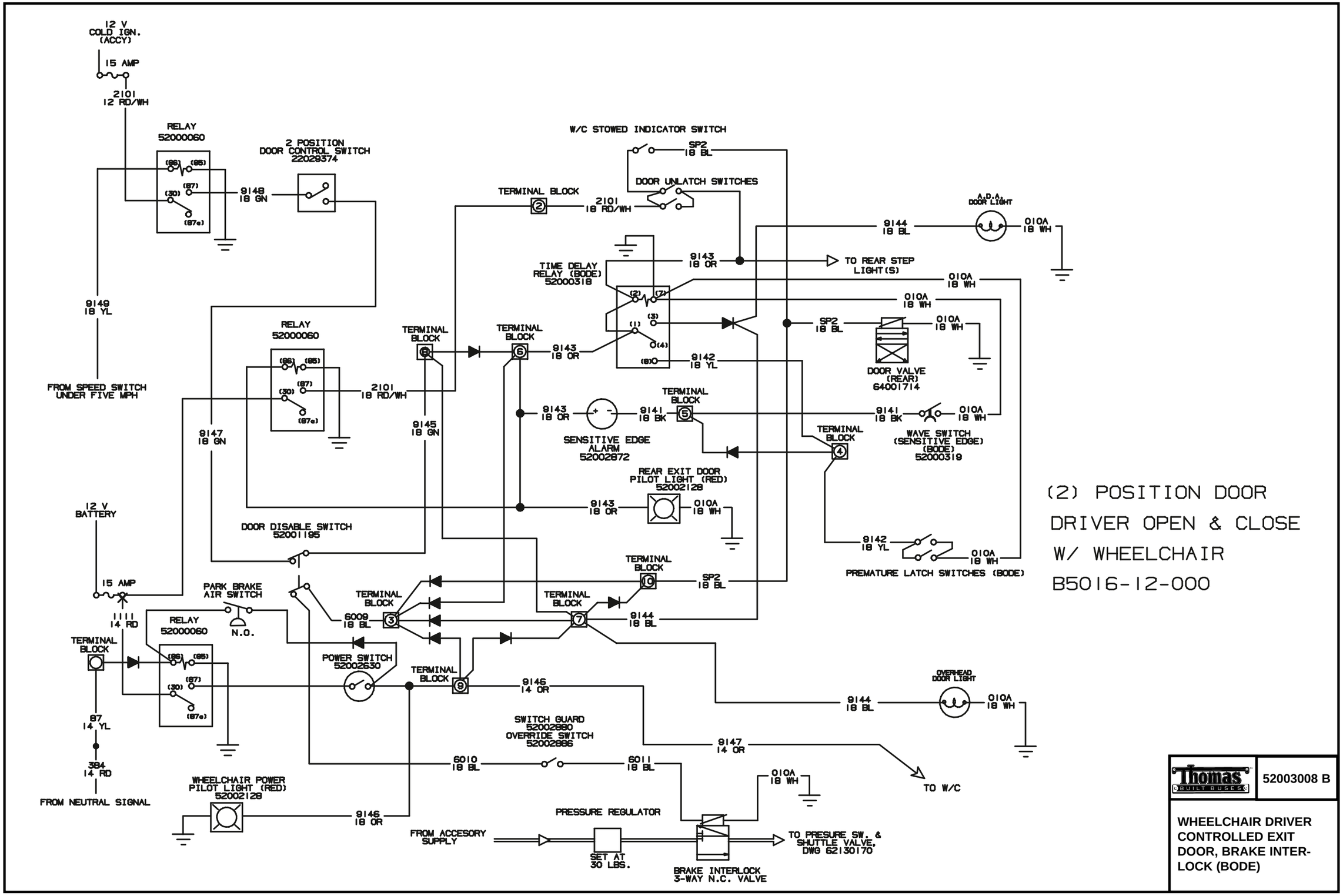
12 V
COLD IGN.
(ACCY)
15 AMP
2101
12 RD/WH
RELAY
52000060
2 POSITION
DOOR CONTROL SWITCH
22029374
9148
18 GN
W/C STOWED INDICATOR SWITCH
SP2
18 BL
DOOR UNLATCH SWITCHES
TERMINAL BLOCK
2101
18 RD/WH
A.D.A.
DOOR LIGHT
9144
18 BL
010A
18 WH
9143
18 OR
TO REAR STEP
LIGHT(S)
TIME DELAY
RELAY (BODE)
52000318
9149
18 YL
FROM SPEED SWITCH
UNDER FIVE MPH
RELAY
52000060
TERMINAL
BLOCK
TERMINAL
BLOCK
9143
18 OR
9142
18 YL
SP2
18 BL
DOOR VALVE
(REAR)
64001714
2101
18 RD/WH
9147
18 GN
9145
18 GN
9143
18 OR
9141
18 BK
TERMINAL
BLOCK
SENSITIVE EDGE
ALARM
52002872
9141
18 BK
WAVE SWITCH
(SENSITIVE EDGE)
(BODE)
52000319
TERMINAL
BLOCK
REAR EXIT DOOR
PILOT LIGHT (RED)
52002128
9143
18 OR
12 V
BATTERY
DOOR DISABLE SWITCH
52001195
9142
18 YL
PREMATURE LATCH SWITCHES (BODE)
15 AMP
PARK BRAKE
AIR SWITCH
N.O.
TERMINAL
BLOCK
SP2
18 BL
1111
14 RD
RELAY
52000060
TERMINAL
BLOCK
6009
18 BL
TERMINAL
BLOCK
9144
18 BL
TERMINAL
BLOCK
POWER SWITCH
52002630
TERMINAL
BLOCK
9146
14 OR
OVERHEAD
DOOR LIGHT
9144
18 BL
87
14 YL
SWITCH GUARD
52002890
OVERRIDE SWITCH
52002886
9147
14 OR
384
14 RD
6010
18 BL
6011
18 BL
TO W/C
FROM NEUTRAL SIGNAL
WHEELCHAIR POWER
PILOT LIGHT (RED)
52002128
9146
18 OR
PRESSURE REGULATOR
FROM ACCESORY
SUPPLY
SET AT
30 LBS.
BRAKE INTERLOCK
3-WAY N.C. VALVE
TO PRESURE SW. &
SHUTTLE VALVE,
DWG 62130170
(2) POSITION DOOR
DRIVER OPEN & CLOSE
W/ WHEELCHAIR
B5016-12-000
Thomas
BUILT BUSES
52003008 B
WHEELCHAIR DRIVER
CONTROLLED EXIT
DOOR, BRAKE INTER-
LOCK (BODE)

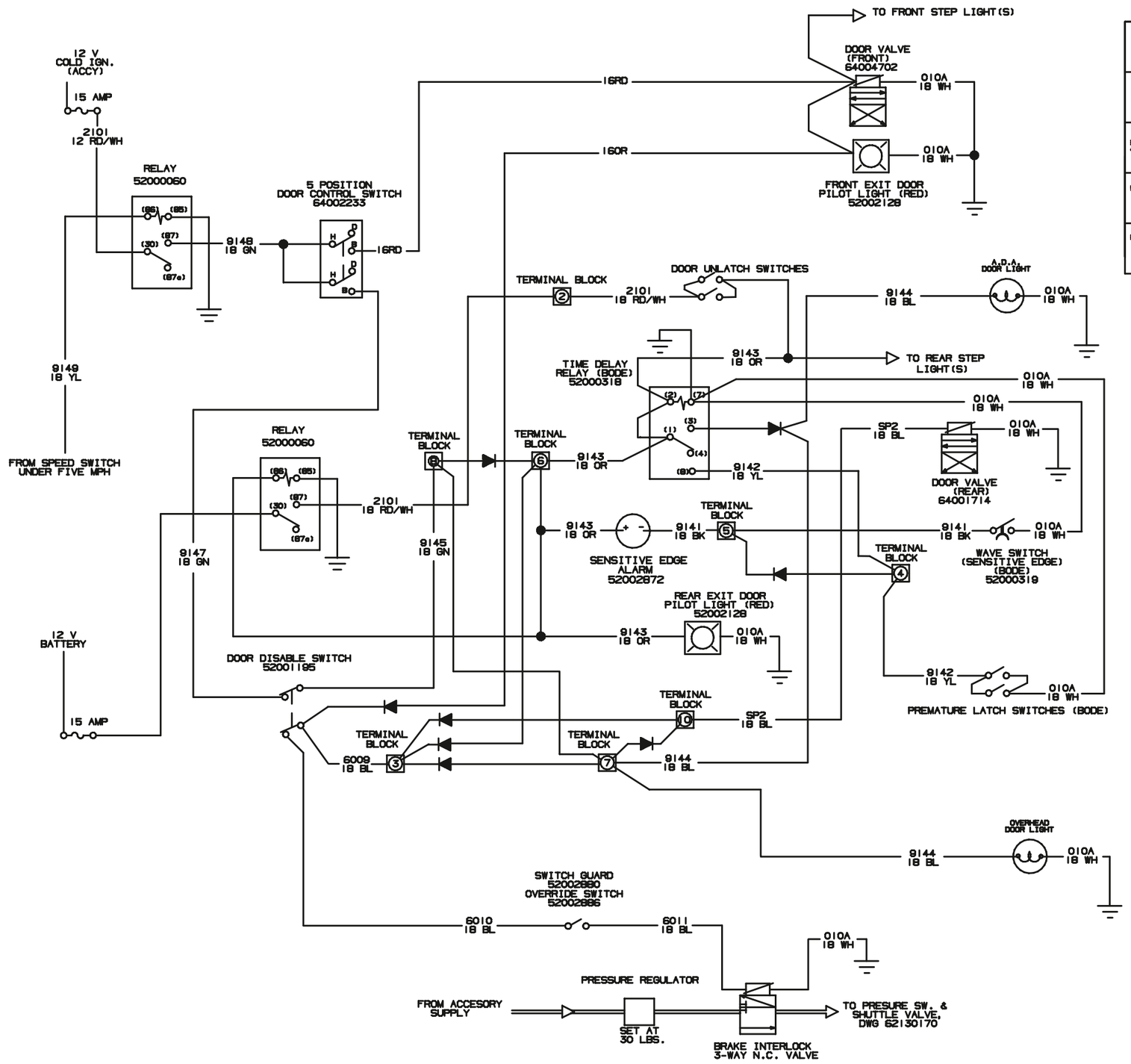

5 POSITION DOOR CONTROL	FRONT	REAR
OFF CENTER POS.	H D B	H D B
REAR DOOR ONLY (1ST RGHT POS)	H D B	H D B
BOTH FRONT & REAR DOOR (2ND RGT POS.)	H D B	H D B
FRONT DOOR ONLY (1ST LFT POS.)	H D B	H D B
BOTH FRONT & REAR DOOR (2ND LFT DOOR)	H D B	H D B

(5) POSITION
DOOR CONTROL
B5016-13-000

Thomas BUILT BUSES

52002893 C

REAR DOOR w/FRONT DOOR, 5 POSITION DOOR CONTROL, w/BRAKE INTERLOCK (BODE)

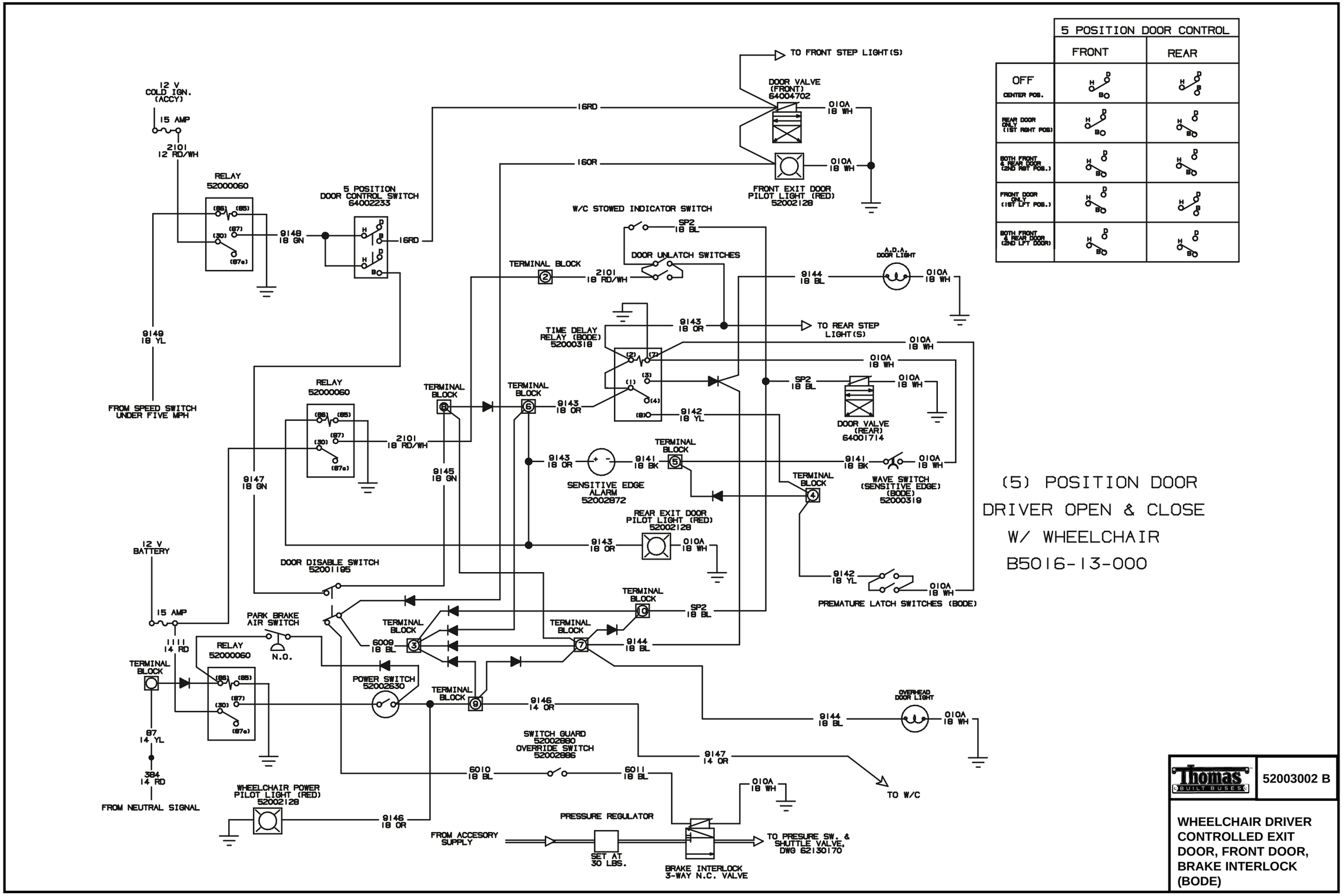
5 POSITION DOOR CONTROL
FRONT
REAR
OFF
CENTER POS.
REAR DOOR ONLY (1ST RIGHT POS)
BOTH FRONT & REAR DOOR (2ND RGT POS.)
FRONT DOOR ONLY (1ST LFT POS.)
BOTH FRONT & REAR DOOR (2ND LFT DOOR)
12 V COLD IGN. (ACCY)
15 AMP
2101 12 RD/WH
RELAY 52000060
5 POSITION DOOR CONTROL SWITCH 64002233
9148 18 GN
16RD
TO FRONT STEP LIGHT(S)
DOOR VALVE (FRONT) 64004702
010A 18 WH
16OR
FRONT EXIT DOOR PILOT LIGHT (RED) 52002128
W/C STOWED INDICATOR SWITCH
SP2 18 BL
DOOR UNLATCH SWITCHES
TERMINAL BLOCK
2101 18 RD/WH
A.D.A. DOOR LIGHT
9144 18 BL
9149 18 YL
TIME DELAY RELAY (BODE) 52000318
9143 18 OR
TO REAR STEP LIGHT(S)
FROM SPEED SWITCH UNDER FIVE MPH
9142 18 YL
DOOR VALVE (REAR) 64001714
2101 18 RD/WH
9141 18 BK
SENSITIVE EDGE ALARM 52002872
WAVE SWITCH (SENSITIVE EDGE) (BODE) 52000319
9147 18 GN
9145 18 GN
REAR EXIT DOOR PILOT LIGHT (RED) 52002128
12 V BATTERY
DOOR DISABLE SWITCH 52001195
PREMATURE LATCH SWITCHES (BODE)
15 AMP
PARK BRAKE AIR SWITCH
N.O.
1111 14 RD
6009 18 BL
9146 14 OR
POWER SWITCH 52002630
OVERHEAD DOOR LIGHT
87 14 YL
SWITCH GUARD 52002880 OVERRIDE SWITCH 52002886
9147 14 OR
384 14 RD
6010 18 BL
6011 18 BL
TO W/C
FROM NEUTRAL SIGNAL
WHEELCHAIR POWER PILOT LIGHT (RED) 52002128
PRESSURE REGULATOR
FROM ACCESORY SUPPLY
SET AT 30 LBS.
BRAKE INTERLOCK 3-WAY N.C. VALVE
TO PRESURE SW. & SHUTTLE VALVE, DWG 62130170
(5) POSITION DOOR
DRIVER OPEN & CLOSE
W/ WHEELCHAIR
B5016-13-000
Thomas BUILT BUSES
52003002 B
WHEELCHAIR DRIVER CONTROLLED EXIT DOOR, FRONT DOOR, BRAKE INTERLOCK (BODE)

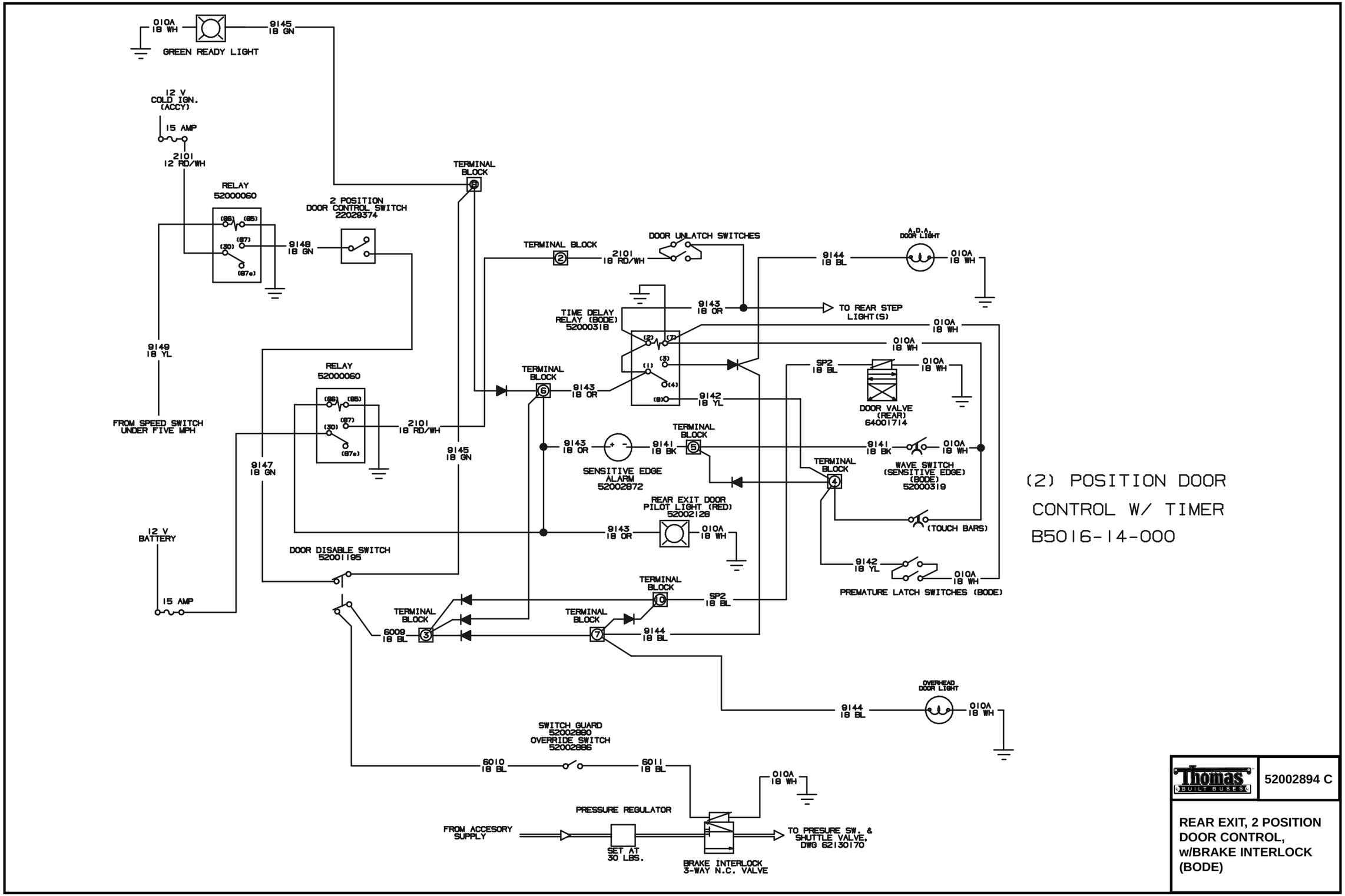
010A 18 WH
9145 18 GN
GREEN READY LIGHT
12 V COLD IGN. (ACCY)
15 AMP
2101 12 RD/WH
RELAY 52000060
2 POSITION DOOR CONTROL SWITCH 22029374
9148 18 GN
TERMINAL BLOCK
TERMINAL BLOCK
2101 18 RD/WH
DOOR UNLATCH SWITCHES
9144 18 BL
A.D.A. DOOR LIGHT
010A 18 WH
9143 18 OR
TO REAR STEP LIGHT(S)
TIME DELAY RELAY (BODE) 52000318
010A 18 WH
010A 18 WH
9149 18 YL
RELAY 52000060
TERMINAL BLOCK
9143 18 OR
9142 18 YL
SP2 18 BL
010A 18 WH
DOOR VALVE (REAR) 64001714
FROM SPEED SWITCH UNDER FIVE MPH
2101 18 RD/WH
9145 18 GN
9147 18 GN
9143 18 OR
SENSITIVE EDGE ALARM 52002872
9141 18 BK
TERMINAL BLOCK
9141 18 BK
010A 18 WH
TERMINAL BLOCK
WAVE SWITCH (SENSITIVE EDGE) (BODE) 52000319
REAR EXIT DOOR PILOT LIGHT (RED) 52002128
(TOUCH BARS)
12 V BATTERY
9143 18 OR
010A 18 WH
DOOR DISABLE SWITCH 52001195
9142 18 YL
010A 18 WH
PREMATURE LATCH SWITCHES (BODE)
TERMINAL BLOCK
SP2 18 BL
15 AMP
TERMINAL BLOCK
TERMINAL BLOCK
6009 18 BL
9144 18 BL
OVERHEAD DOOR LIGHT
9144 18 BL
010A 18 WH
SWITCH GUARD 52002890
OVERRIDE SWITCH 52002886
6010 18 BL
6011 18 BL
010A 18 WH
PRESSURE REGULATOR
FROM ACCESORY SUPPLY
SET AT 30 LBS.
BRAKE INTERLOCK 3-WAY N.C. VALVE
TO PRESURE SW. & SHUTTLE VALVE, DWG 62130170
(2) POSITION DOOR CONTROL W/ TIMER B5016-14-000
Thomas BUILT BUSES
52002894 C
REAR EXIT, 2 POSITION DOOR CONTROL, w/BRAKE INTERLOCK (BODE)

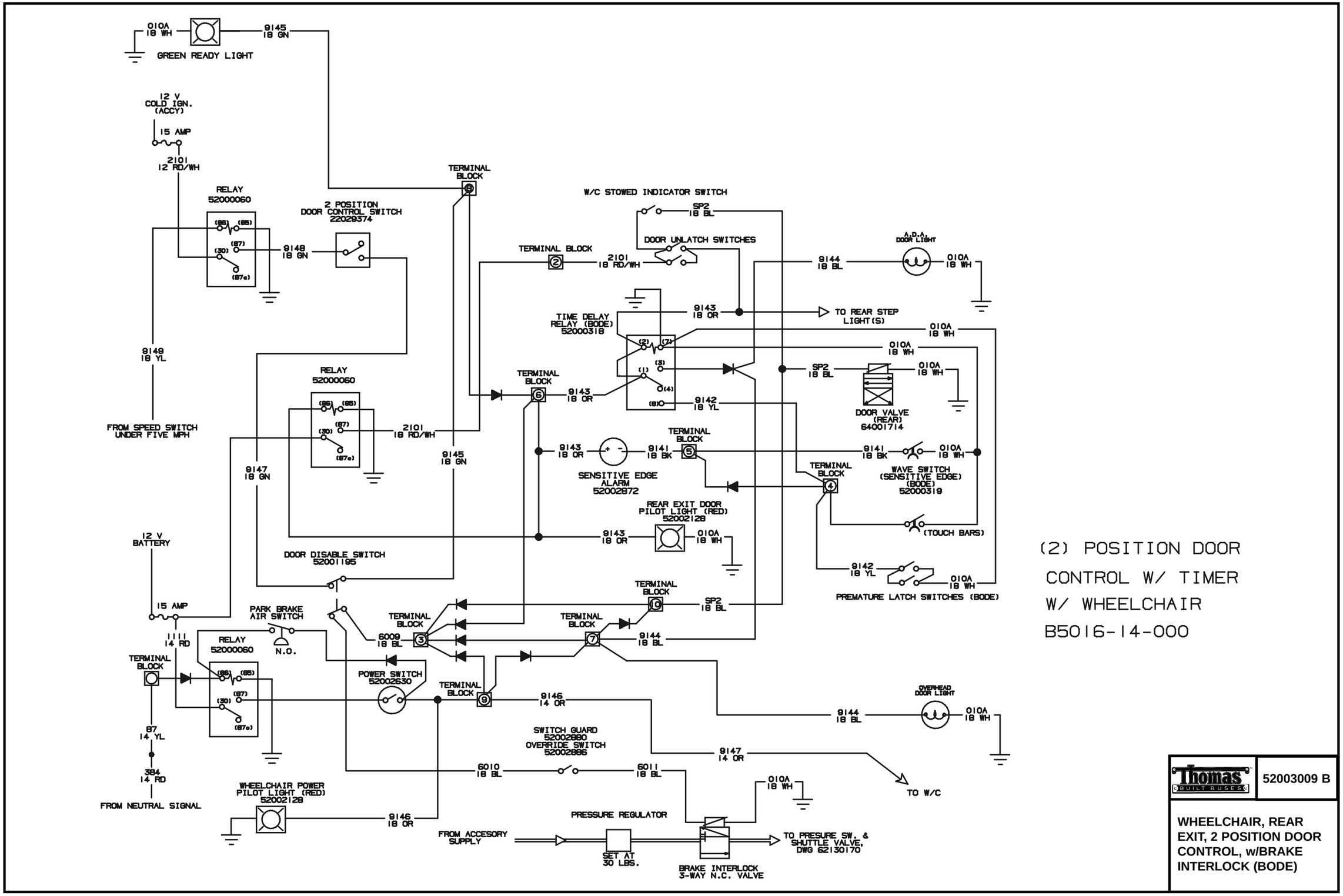
010A 18 WH
9145 18 GN
GREEN READY LIGHT
12 V COLD IGN. (ACCY)
15 AMP
2101 12 RD/WH
RELAY 52000060
2 POSITION DOOR CONTROL SWITCH 22029374
9148 18 GN
TERMINAL BLOCK
W/C STOWED INDICATOR SWITCH
SP2 18 BL
DOOR UNLATCH SWITCHES
TERMINAL BLOCK
2101 18 RD/WH
9144 18 BL
A.D.A. DOOR LIGHT
010A 18 WH
9143 18 OR
TO REAR STEP LIGHT(S)
TIME DELAY RELAY (BODE) 52000318
9149 18 YL
FROM SPEED SWITCH UNDER FIVE MPH
RELAY 52000060
TERMINAL BLOCK
9143 18 OR
9142 18 YL
SP2 18 BL
DOOR VALVE (REAR) 64001714
2101 18 RD/WH
9145 18 GN
9147 18 GN
9143 18 OR
SENSITIVE EDGE ALARM 52002872
9141 18 BK
TERMINAL BLOCK
WAVE SWITCH (SENSITIVE EDGE) (BODE) 52000319
REAR EXIT DOOR PILOT LIGHT (RED) 52002128
(TOUCH BARS)
12 V BATTERY
DOOR DISABLE SWITCH 52001195
PREMATURE LATCH SWITCHES (BODE)
15 AMP
PARK BRAKE AIR SWITCH
N.O.
1111 14 RD
6009 18 BL
POWER SWITCH 52002630
9146 14 OR
OVERHEAD DOOR LIGHT
87 14 YL
384 14 RD
FROM NEUTRAL SIGNAL
SWITCH GUARD 52002880
OVERRIDE SWITCH 52002886
6010 18 BL
6011 18 BL
9147 14 OR
TO W/C
WHEELCHAIR POWER PILOT LIGHT (RED) 52002128
9146 18 OR
PRESSURE REGULATOR
FROM ACCESORY SUPPLY
SET AT 30 LBS.
BRAKE INTERLOCK 3-WAY N.C. VALVE
TO PRESURE SW. & SHUTTLE VALVE, DWG 62130170
(2) POSITION DOOR CONTROL W/ TIMER W/ WHEELCHAIR B5016-14-000
Thomas BUILT BUSES
52003009 B
WHEELCHAIR, REAR EXIT, 2 POSITION DOOR CONTROL, w/BRAKE INTERLOCK (BODE)

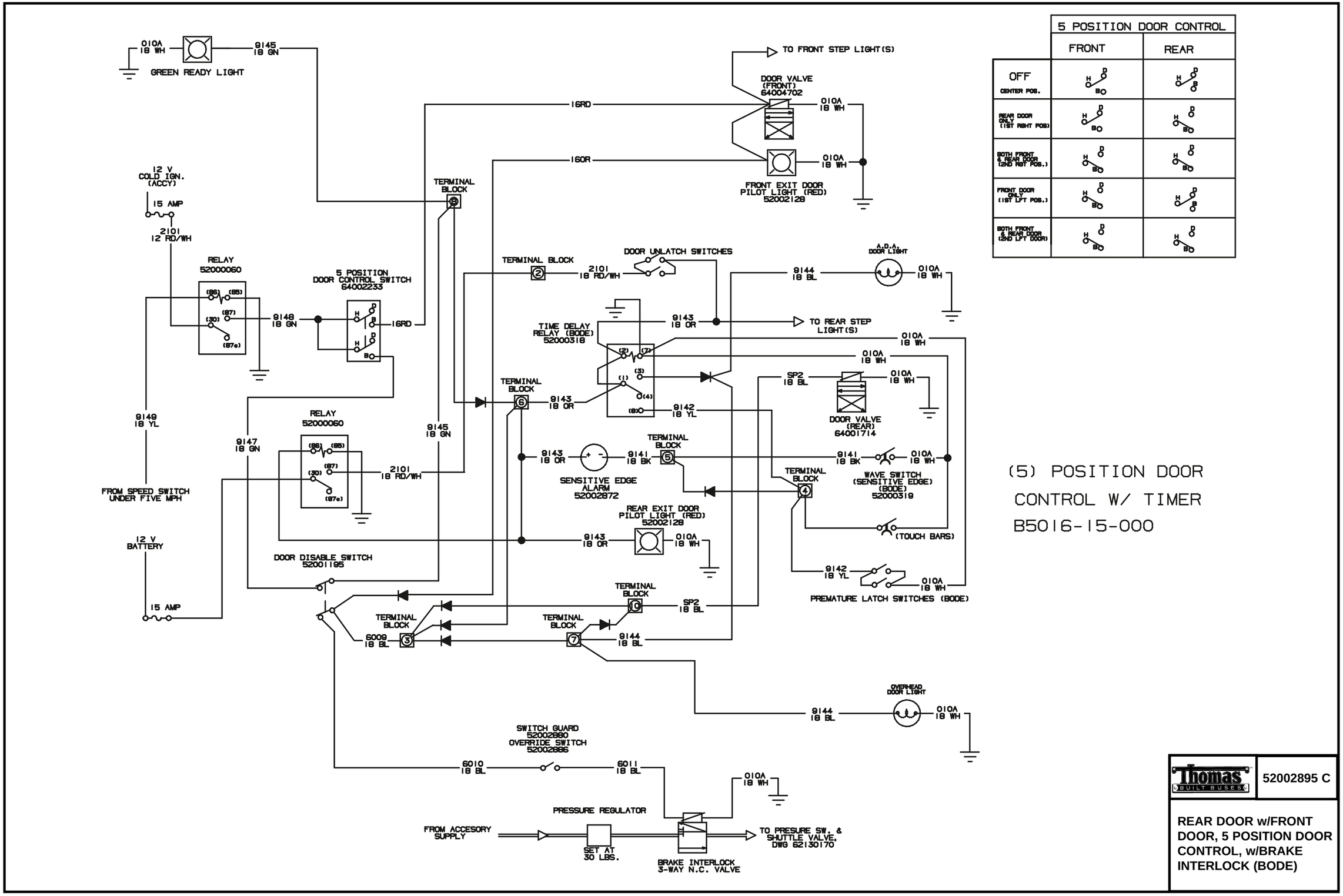
GREEN READY LIGHT
010A 18 WH
9145 18 GN
TO FRONT STEP LIGHT(S)
DOOR VALVE (FRONT) 64004702
16RD
16OR
FRONT EXIT DOOR PILOT LIGHT (RED) 52002128
12 V COLD IGN. (ACCY)
15 AMP
2101 12 RD/WH
TERMINAL BLOCK
RELAY 52000060
5 POSITION DOOR CONTROL SWITCH 64002233
9148 18 GN
DOOR UNLATCH SWITCHES
A.D.A. DOOR LIGHT
9144 18 BL
TIME DELAY RELAY (BODE) 52000318
9143 18 OR
TO REAR STEP LIGHT(S)
SP2 18 BL
DOOR VALVE (REAR) 64001714
9142 18 YL
9149 18 YL
9147 18 GN
9145 18 GN
FROM SPEED SWITCH UNDER FIVE MPH
SENSITIVE EDGE ALARM 52002872
9141 18 BK
WAVE SWITCH (SENSITIVE EDGE) (BODE) 52000319
REAR EXIT DOOR PILOT LIGHT (RED) 52002128
(TOUCH BARS)
12 V BATTERY
DOOR DISABLE SWITCH 52001195
PREMATURE LATCH SWITCHES (BODE)
6009 18 BL
OVERHEAD DOOR LIGHT
SWITCH GUARD 52002880 OVERRIDE SWITCH 52002886
6010 18 BL
6011 18 BL
PRESSURE REGULATOR
FROM ACCESORY SUPPLY
SET AT 30 LBS.
BRAKE INTERLOCK 3-WAY N.C. VALVE
TO PRESURE SW. & SHUTTLE VALVE, DWG 62130170
5 POSITION DOOR CONTROL
FRONT
REAR
OFF
CENTER POS.
REAR DOOR ONLY (1ST RGHT POS)
BOTH FRONT & REAR DOOR (2ND RGT POS.)
FRONT DOOR ONLY (1ST LFT POS.)
BOTH FRONT & REAR DOOR (2ND LFT DOOR)
(5) POSITION DOOR CONTROL W/ TIMER
B5016-15-000
Thomas BUILT BUSES
52002895 C
REAR DOOR w/FRONT DOOR, 5 POSITION DOOR CONTROL, w/BRAKE INTERLOCK (BODE)

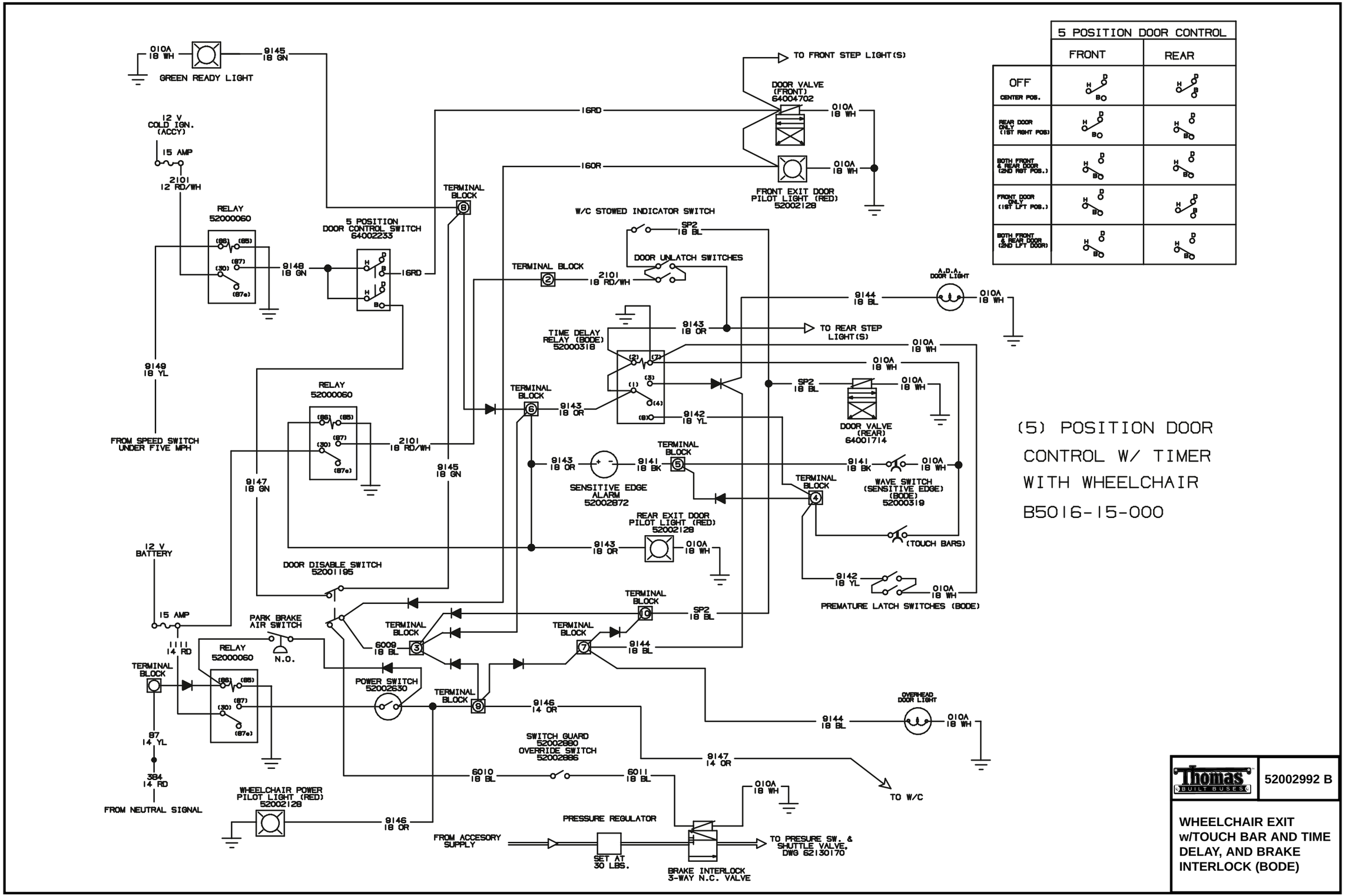
5 POSITION DOOR CONTROL
FRONT
REAR
OFF
CENTER POS.
REAR DOOR ONLY (1ST RGHT POS)
BOTH FRONT & REAR DOOR (2ND RGT POS.)
FRONT DOOR ONLY (1ST LFT POS.)
BOTH FRONT & REAR DOOR (2ND LFT DOOR)
GREEN READY LIGHT
010A 18 WH
9145 18 GN
12 V COLD IGN. (ACCY)
15 AMP
2101 12 RD/WH
RELAY 52000060
5 POSITION DOOR CONTROL SWITCH 64002233
9148 18 GN
16RD
TERMINAL BLOCK
TO FRONT STEP LIGHT(S)
DOOR VALVE (FRONT) 64004702
16OR
FRONT EXIT DOOR PILOT LIGHT (RED) 52002128
W/C STOWED INDICATOR SWITCH
SP2 18 BL
DOOR UNLATCH SWITCHES
2101 18 RD/WH
A.D.A. DOOR LIGHT
9144 18 BL
9143 18 OR
TO REAR STEP LIGHT(S)
TIME DELAY RELAY (BODE) 52000318
9149 18 YL
FROM SPEED SWITCH UNDER FIVE MPH
9142 18 YL
DOOR VALVE (REAR) 64001714
2101 18 RD/WH
9145 18 GN
9147 18 GN
9141 18 BK
SENSITIVE EDGE ALARM 52002872
WAVE SWITCH (SENSITIVE EDGE) (BODE) 52000319
REAR EXIT DOOR PILOT LIGHT (RED) 52002129
(TOUCH BARS)
12 V BATTERY
DOOR DISABLE SWITCH 52001195
PREMATURE LATCH SWITCHES (BODE)
PARK BRAKE AIR SWITCH
N.O.
1111 14 RD
6009 18 BL
POWER SWITCH 52002630
9146 14 OR
OVERHEAD DOOR LIGHT
97 14 YL
384 14 RD
FROM NEUTRAL SIGNAL
SWITCH GUARD 52002880
OVERRIDE SWITCH 52002886
6010 18 BL
6011 18 BL
TO W/C
WHEELCHAIR POWER PILOT LIGHT (RED) 52002128
PRESSURE REGULATOR
FROM ACCESORY SUPPLY
SET AT 30 LBS.
BRAKE INTERLOCK 3-WAY N.C. VALVE
TO PRESURE SW. & SHUTTLE VALVE. DWG 62130170
(5) POSITION DOOR CONTROL W/ TIMER WITH WHEELCHAIR B5016-15-000
Thomas BUILT BUSES
52002992 B
WHEELCHAIR EXIT w/TOUCH BAR AND TIME DELAY, AND BRAKE INTERLOCK (BODE)

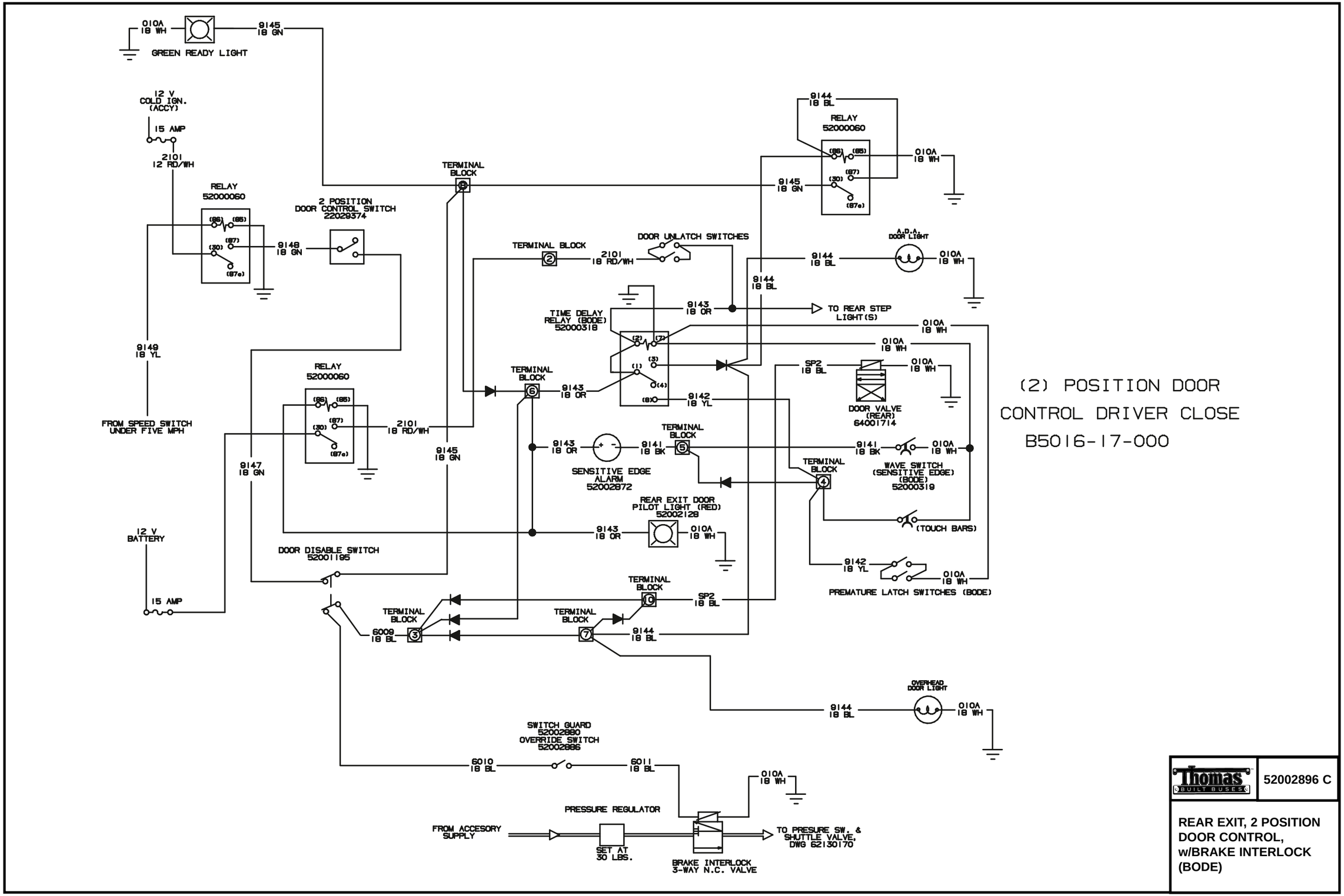
010A 18 WH
9145 18 GN
GREEN READY LIGHT
12 V COLD IGN. (ACCY)
15 AMP
2101 12 RD/WH
RELAY 52000060
2 POSITION DOOR CONTROL SWITCH 22029374
9148 18 GN
TERMINAL BLOCK
9144 18 BL
RELAY 52000060
010A 18 WH
9145 18 GN
TERMINAL BLOCK
2101 18 RD/WH
DOOR UNLATCH SWITCHES
A.D.A. DOOR LIGHT
9144 18 BL
010A 18 WH
9144 18 BL
9143 18 OR
TO REAR STEP LIGHT(S)
010A 18 WH
TIME DELAY RELAY (BODE) 52000318
010A 18 WH
9149 18 YL
RELAY 52000060
TERMINAL BLOCK
9143 18 OR
SP2 18 BL
010A 18 WH
9142 18 YL
DOOR VALVE (REAR) 64001714
FROM SPEED SWITCH UNDER FIVE MPH
2101 18 RD/WH
9145 18 GN
9143 18 OR
9141 18 BK
TERMINAL BLOCK
9141 18 BK
010A 18 WH
9147 18 GN
SENSITIVE EDGE ALARM 52002872
TERMINAL BLOCK
WAVE SWITCH (SENSITIVE EDGE) (BODE) 52000319
REAR EXIT DOOR PILOT LIGHT (RED) 52002128
(TOUCH BARS)
12 V BATTERY
9143 18 OR
010A 18 WH
DOOR DISABLE SWITCH 52001185
9142 18 YL
010A 18 WH
PREMATURE LATCH SWITCHES (BODE)
TERMINAL BLOCK
SP2 18 BL
15 AMP
TERMINAL BLOCK
TERMINAL BLOCK
6009 18 BL
9144 18 BL
OVERHEAD DOOR LIGHT
9144 18 BL
010A 18 WH
SWITCH GUARD 52002890
OVERRIDE SWITCH 52002886
6010 18 BL
6011 18 BL
010A 18 WH
PRESSURE REGULATOR
FROM ACCESORY SUPPLY
SET AT 30 LBS.
BRAKE INTERLOCK 3-WAY N.C. VALVE
TO PRESURE SW. & SHUTTLE VALVE, DWG 62130170
(2) POSITION DOOR CONTROL DRIVER CLOSE
B5016-17-000
Thomas BUILT BUSES
52002896 C
REAR EXIT, 2 POSITION DOOR CONTROL, w/BRAKE INTERLOCK (BODE)

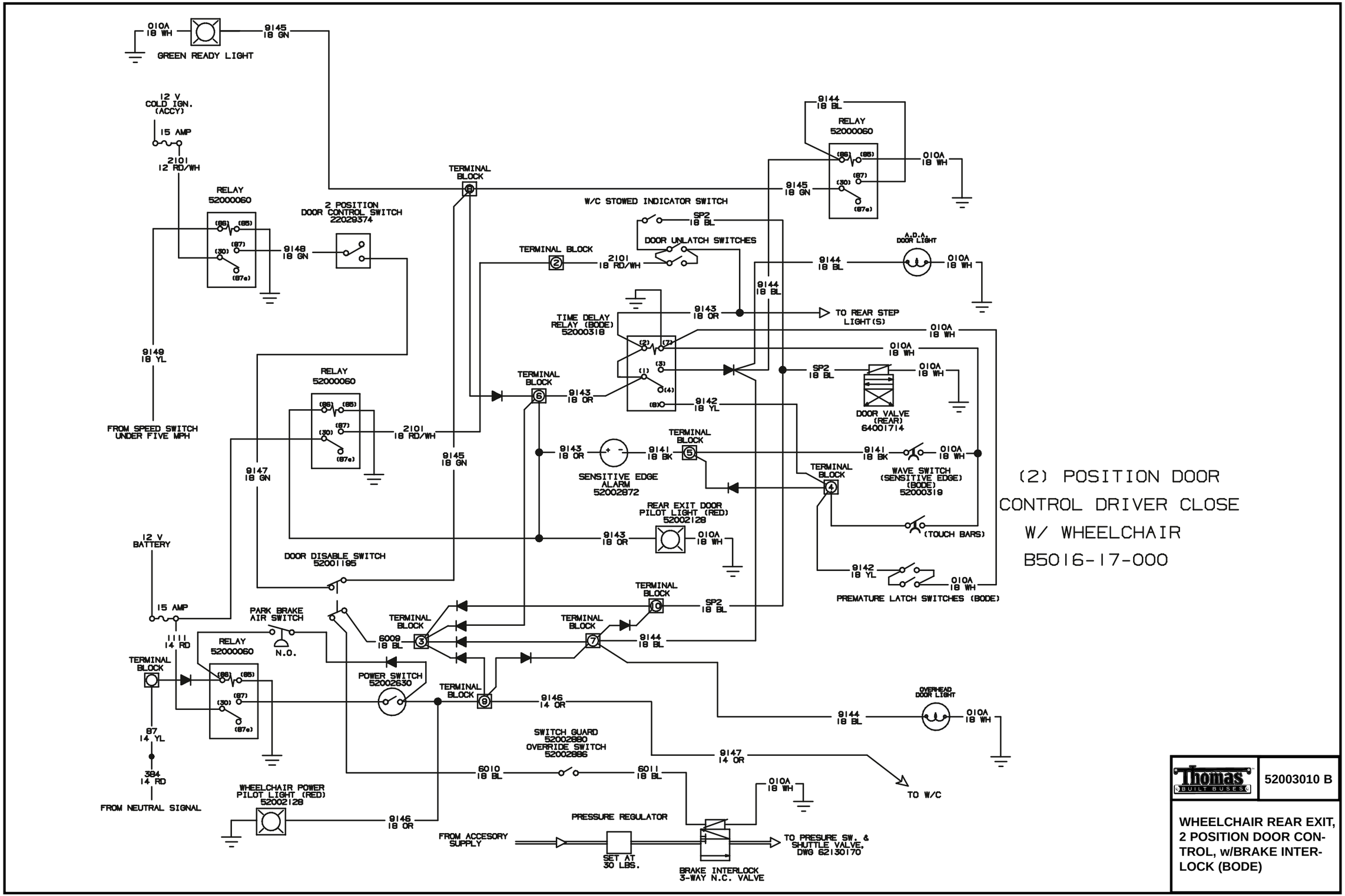
010A 18 WH
9145 18 GN
GREEN READY LIGHT
12 V COLD IGN. (ACCY)
15 AMP
2101 12 RD/WH
RELAY 52000060
2 POSITION DOOR CONTROL SWITCH 22029374
9148 18 GN
9149 18 YL
FROM SPEED SWITCH UNDER FIVE MPH
TERMINAL BLOCK
W/C STOWED INDICATOR SWITCH
SP2 18 BL
DOOR UNLATCH SWITCHES
TERMINAL BLOCK
2101 18 RD/WH
9144 18 BL
RELAY 52000060
9145 18 GN
010A 18 WH
A.D.A. DOOR LIGHT
9143 18 OR
TO REAR STEP LIGHT(S)
TIME DELAY RELAY (BODE) 52000318
TERMINAL BLOCK
9143 18 OR
9142 18 YL
SP2 18 BL
DOOR VALVE (REAR) 64001714
RELAY 52000060
2101 18 RD/WH
9145 18 GN
9147 18 GN
9143 18 OR
SENSITIVE EDGE ALARM 52002872
9141 18 BK
TERMINAL BLOCK
WAVE SWITCH (SENSITIVE EDGE) (BODE) 52000319
(TOUCH BARS)
REAR EXIT DOOR PILOT LIGHT (RED) 52002128
DOOR DISABLE SWITCH 52001195
9142 18 YL
PREMATURE LATCH SWITCHES (BODE)
12 V BATTERY
15 AMP
PARK BRAKE AIR SWITCH
N.O.
1111 14 RD
RELAY 52000060
TERMINAL BLOCK
6009 18 BL
POWER SWITCH 52002630
9146 14 OR
OVERHEAD DOOR LIGHT
87 14 YL
384 14 RD
FROM NEUTRAL SIGNAL
SWITCH GUARD 52002880 OVERRIDE SWITCH 52002886
6010 18 BL
6011 18 BL
9147 14 OR
TO W/C
WHEELCHAIR POWER PILOT LIGHT (RED) 52002128
9146 18 OR
PRESSURE REGULATOR
FROM ACCESORY SUPPLY
SET AT 30 LBS.
BRAKE INTERLOCK 3-WAY N.C. VALVE
TO PRESURE SW. & SHUTTLE VALVE, DWG 62130170
(2) POSITION DOOR CONTROL DRIVER CLOSE W/ WHEELCHAIR B5016-17-000
Thomas BUILT BUSES
52003010 B
WHEELCHAIR REAR EXIT, 2 POSITION DOOR CONTROL, w/BRAKE INTERLOCK (BODE)

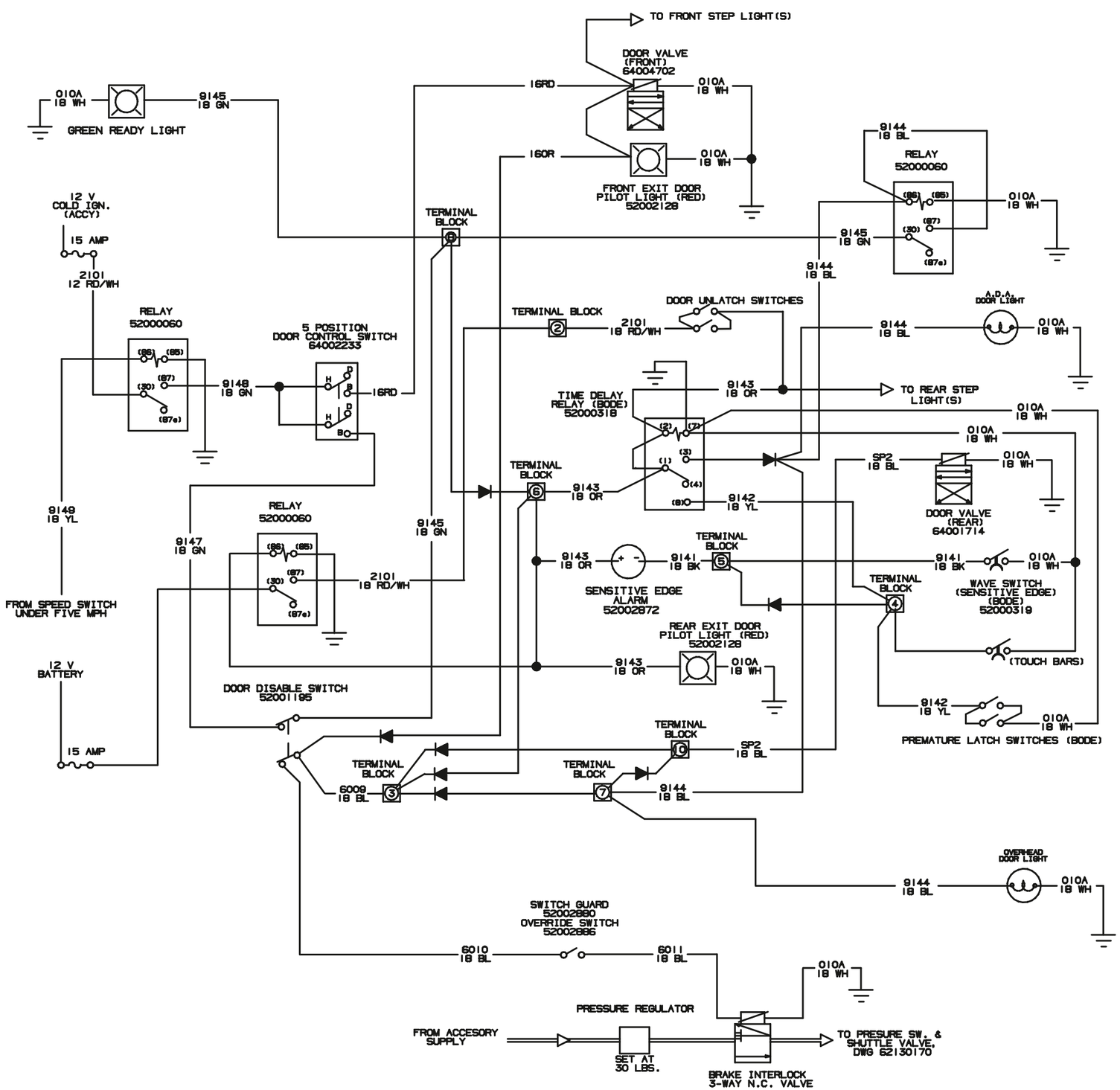

5 POSITION DOOR CONTROL	FRONT	REAR
OFF CENTER POS.	H D B	H D B
REAR DOOR ONLY (1ST RGHT POS)	H D B	H D B
BOTH FRONT & REAR DOOR (2ND RGT POS.)	H D B	H D B
FRONT DOOR ONLY (1ST LFT POS.)	H D B	H D B
BOTH FRONT & REAR DOOR (2ND LFT DOOR)	H D B	H D B

(5) POSITION DOOR CONTROL DRIVER CLOSE

B5016-18-000

Thomas BUILT BUSES

52002897 C

REAR DOOR w/FRONT DOOR, 5 POSITION DOOR CONTROL, w/BRAKE INTERLOCK (BODE)

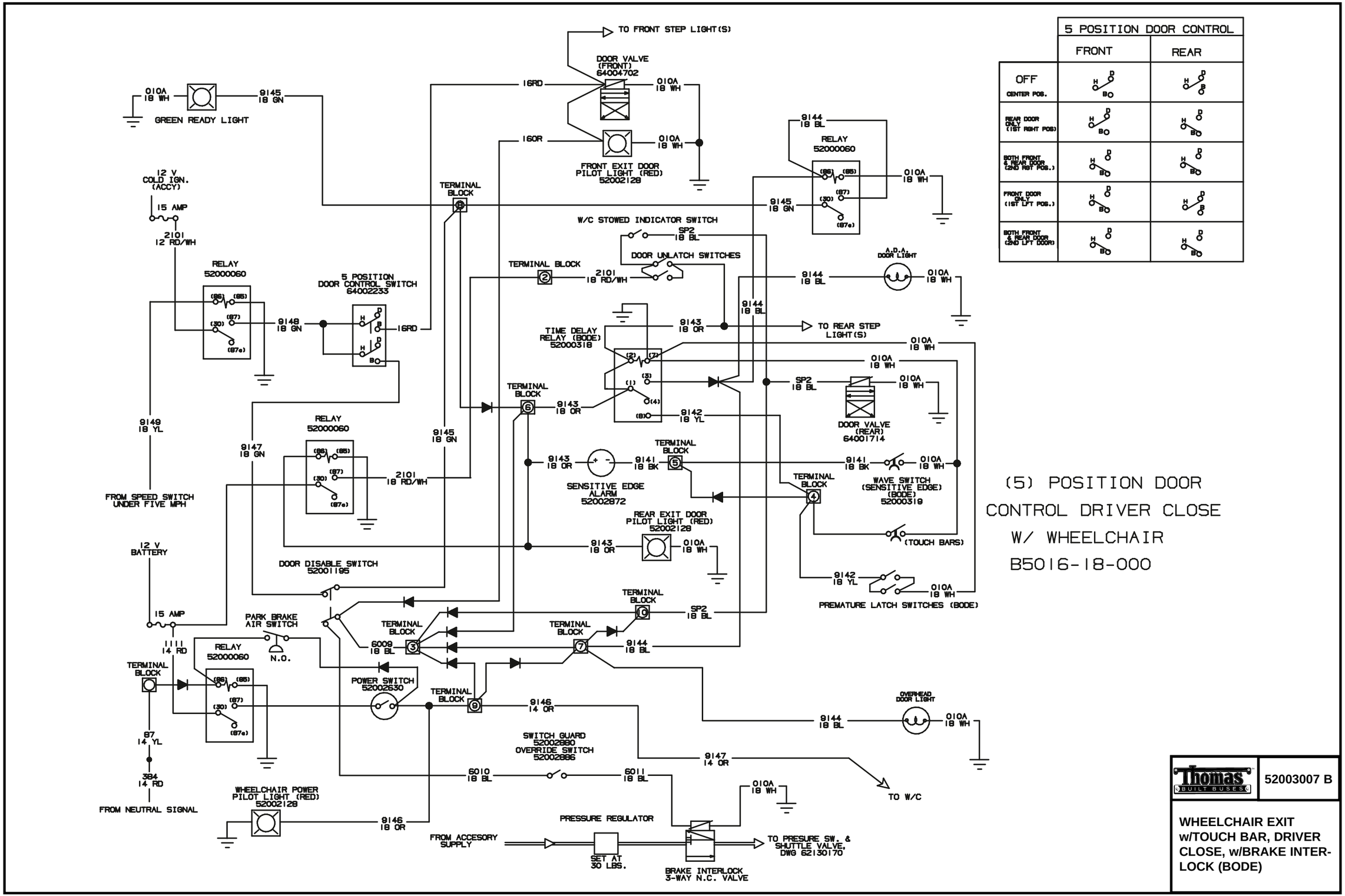
TO FRONT STEP LIGHT(S)
DOOR VALVE (FRONT) 64004702
010A 18 WH
9145 18 GN
GREEN READY LIGHT
16RD
16OR
FRONT EXIT DOOR PILOT LIGHT (RED) 52002128
9144 18 BL
RELAY 52000060
12 V COLD IGN. (ACCY)
15 AMP
2101 12 RD/WH
TERMINAL BLOCK
W/C STOWED INDICATOR SWITCH
SP2 18 BL
DOOR UNLATCH SWITCHES
A.D.A. DOOR LIGHT
5 POSITION DOOR CONTROL SWITCH 64002233
9148 18 GN
TIME DELAY RELAY (BODE) 52000318
9143 18 OR
TO REAR STEP LIGHT(S)
9142 18 YL
DOOR VALVE (REAR) 64001714
9149 18 YL
9147 18 GN
9141 18 BK
WAVE SWITCH (SENSITIVE EDGE) (BODE) 52000319
SENSITIVE EDGE ALARM 52002872
FROM SPEED SWITCH UNDER FIVE MPH
REAR EXIT DOOR PILOT LIGHT (RED) 52002128
(TOUCH BARS)
12 V BATTERY
DOOR DISABLE SWITCH 52001195
PREMATURE LATCH SWITCHES (BODE)
PARK BRAKE AIR SWITCH
N.O.
1111 14 RD
6009 18 BL
POWER SWITCH 52002630
9146 14 OR
OVERHEAD DOOR LIGHT
87 14 YL
384 14 RD
SWITCH GUARD 52002890
OVERRIDE SWITCH 52002886
6010 18 BL
6011 18 BL
9147 14 OR
TO W/C
FROM NEUTRAL SIGNAL
WHEELCHAIR POWER PILOT LIGHT (RED) 52002128
PRESSURE REGULATOR
FROM ACCESORY SUPPLY
SET AT 30 LBS.
TO PRESURE SW. & SHUTTLE VALVE, DWG 62130170
BRAKE INTERLOCK 3-WAY N.C. VALVE
5 POSITION DOOR CONTROL
FRONT
REAR
OFF
CENTER POS.
REAR DOOR ONLY (1ST RGHT POS)
BOTH FRONT & REAR DOOR (2ND RGT POS.)
FRONT DOOR ONLY (1ST LFT POS.)
BOTH FRONT & REAR DOOR (2ND LFT DOOR)
(5) POSITION DOOR CONTROL DRIVER CLOSE W/ WHEELCHAIR B5016-18-000
Thomas BUILT BUSES
52003007 B
WHEELCHAIR EXIT w/TOUCH BAR, DRIVER CLOSE, w/BRAKE INTER-LOCK (BODE)

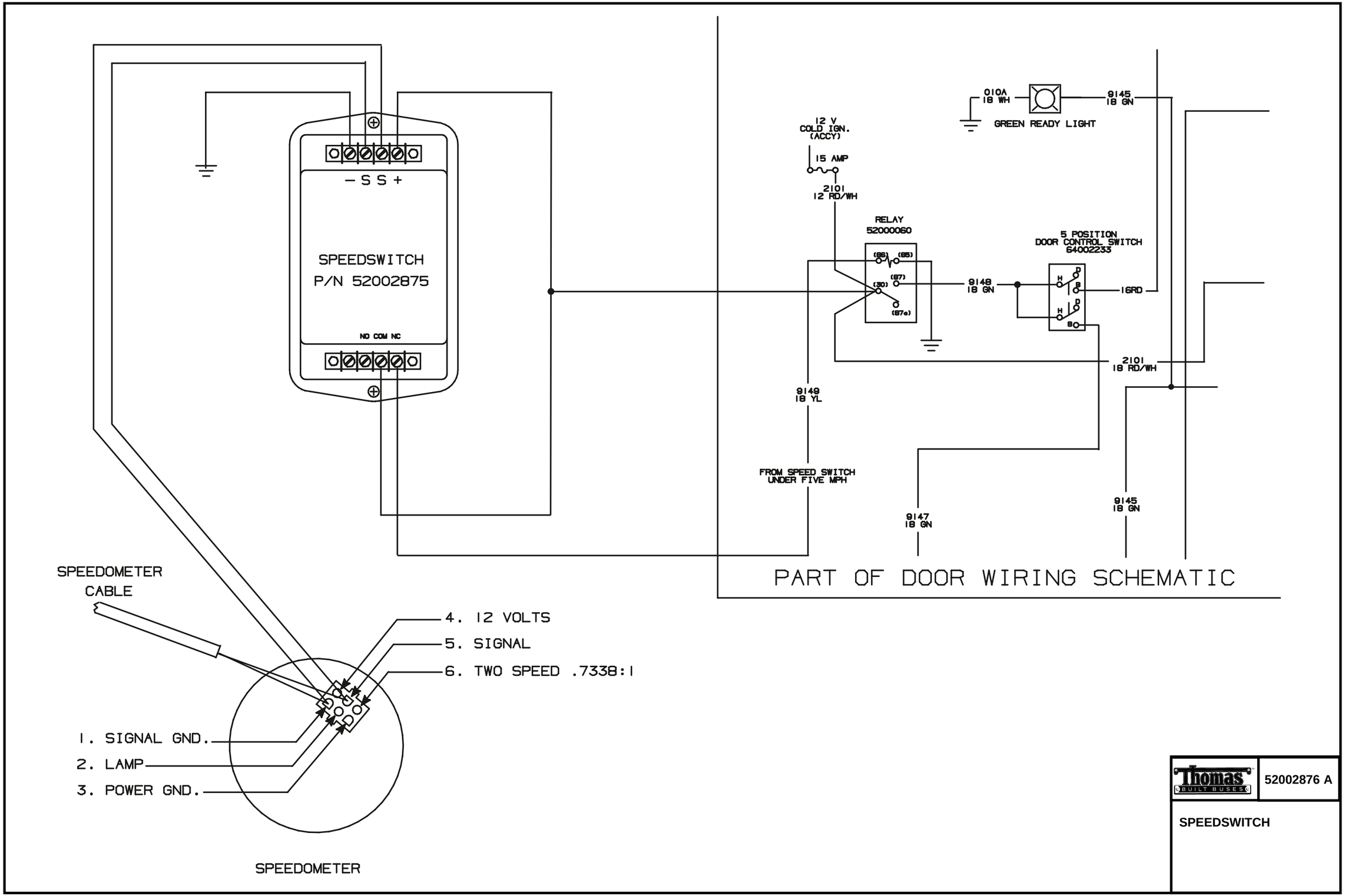
- S S +
SPEEDSWITCH
P/N 52002875
NO COM NC
12 V
COLD IGN.
(ACCY)
15 AMP
2101
12 RD/WH
RELAY
52000060
(86)
(85)
(87)
(30)
(87a)
010A
18 WH
9145
18 GN
GREEN READY LIGHT
5 POSITION
DOOR CONTROL SWITCH
64002233
9148
18 GN
16RD
2101
18 RD/WH
9149
18 YL
FROM SPEED SWITCH
UNDER FIVE MPH
9147
18 GN
9145
18 GN
PART OF DOOR WIRING SCHEMATIC
SPEEDOMETER
CABLE
4. 12 VOLTS
5. SIGNAL
6. TWO SPEED .7338:1
1. SIGNAL GND.
2. LAMP
3. POWER GND.
SPEEDOMETER
Thomas
BUILT BUSES
52002876 A
SPEEDSWITCH

NOTES:

MVP-ER
VANDALOCK
SCHEMATICS

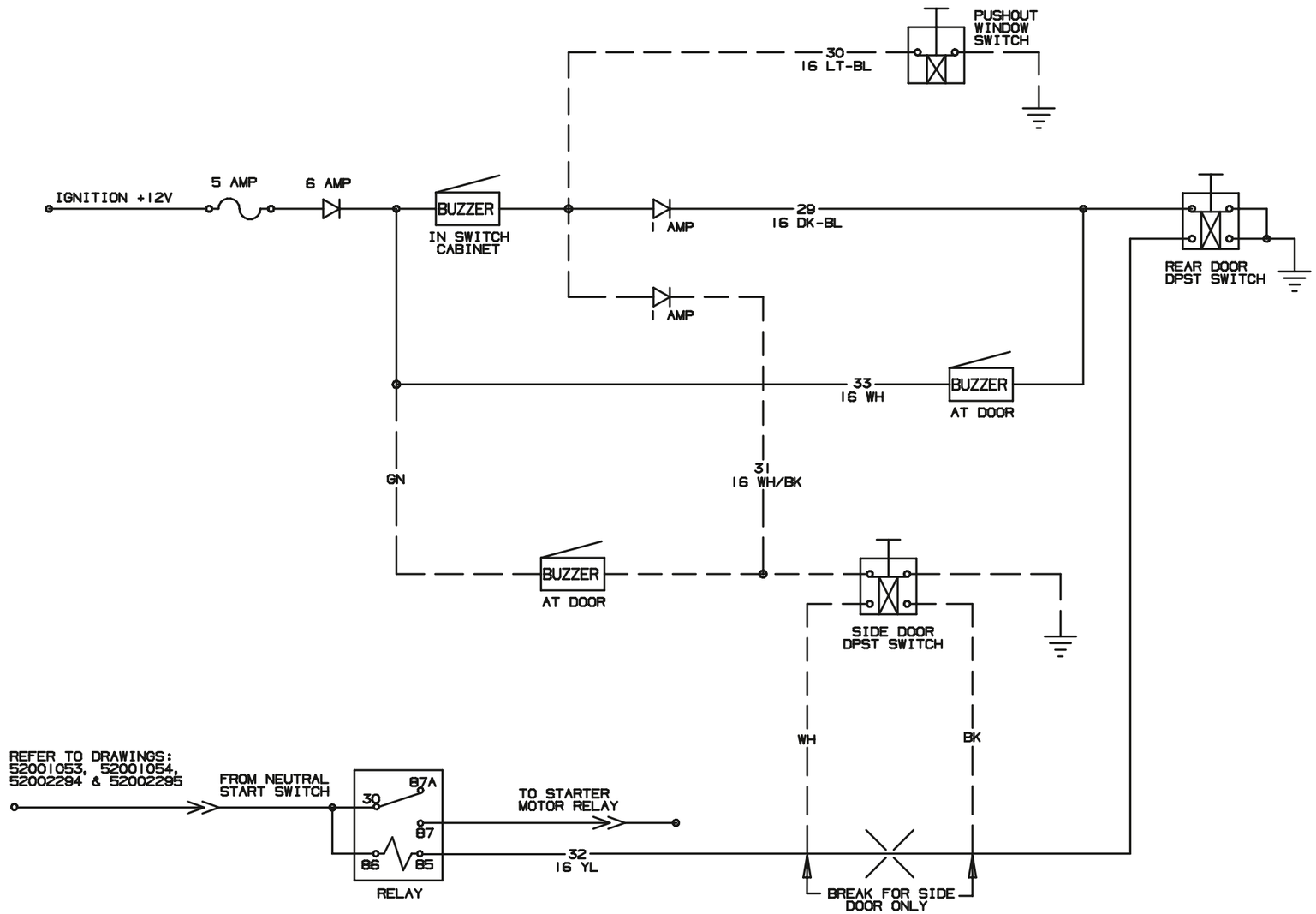

NOTE:

DASHED LINES DENOTE OPTIONAL EQUIPMENT.

DECAL PART NUMBER: 52002537

OVERALL DECAL SIZE: 5" x 7.5"

ON EF AND ER MODELS, CONNECT HARNESS 52001882 TO CONNECTOR ON 4B WIRE IN SIDE PANEL. MOUNT RELAY ON BODY ELECTRICAL PANEL.

Thomas BUILT BUSES

52002064 D

WIRING SCHEMATIC (VANDALOCK)

MVP-ER
RADIO & SPEAKERS
SCHEMATICS

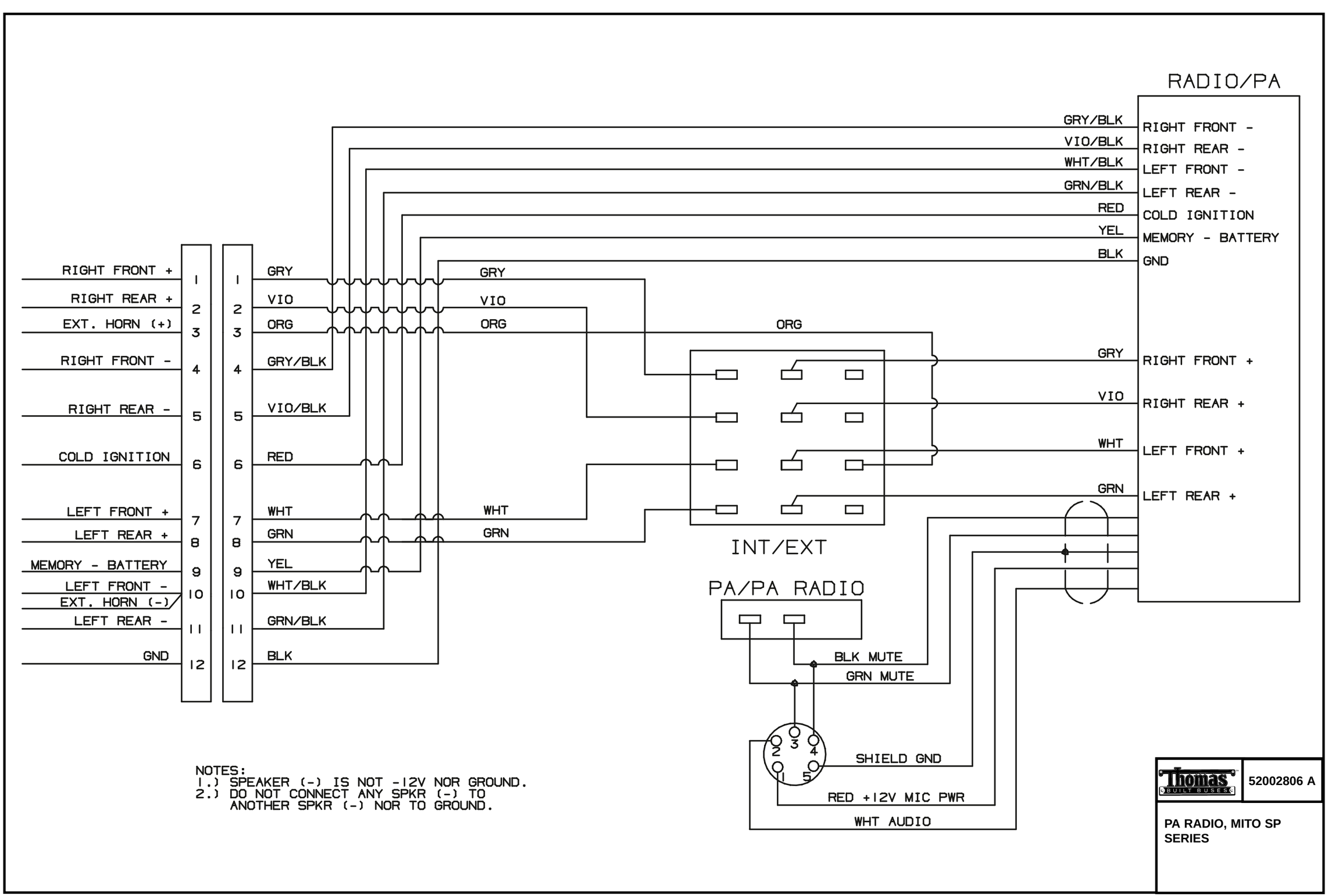
RADIO/PA
GRY/BLK
RIGHT FRONT -
VIO/BLK
RIGHT REAR -
WHT/BLK
LEFT FRONT -
GRN/BLK
LEFT REAR -
RED
COLD IGNITION
YEL
MEMORY - BATTERY
BLK
GND
RIGHT FRONT +
RIGHT REAR +
EXT. HORN (+)
RIGHT FRONT -
RIGHT REAR -
COLD IGNITION
LEFT FRONT +
LEFT REAR +
MEMORY - BATTERY
LEFT FRONT -
EXT. HORN (-)
LEFT REAR -
GND
GRY
VIO
ORG
GRY/BLK
VIO/BLK
RED
WHT
GRN
YEL
WHT/BLK
GRN/BLK
BLK
GRY
VIO
ORG
WHT
GRN
ORG
GRY
VIO
WHT
GRN
RIGHT FRONT +
RIGHT REAR +
LEFT FRONT +
LEFT REAR +
INT/EXT
PA/PA RADIO
BLK MUTE
GRN MUTE
SHIELD GND
RED +12V MIC PWR
WHT AUDIO
NOTES:
1.) SPEAKER (-) IS NOT -12V NOR GROUND.
2.) DO NOT CONNECT ANY SPKR (-) TO
ANOTHER SPKR (-) NOR TO GROUND.
Thomas BUILT BUSES
52002806 A
PA RADIO, MITO SP
SERIES

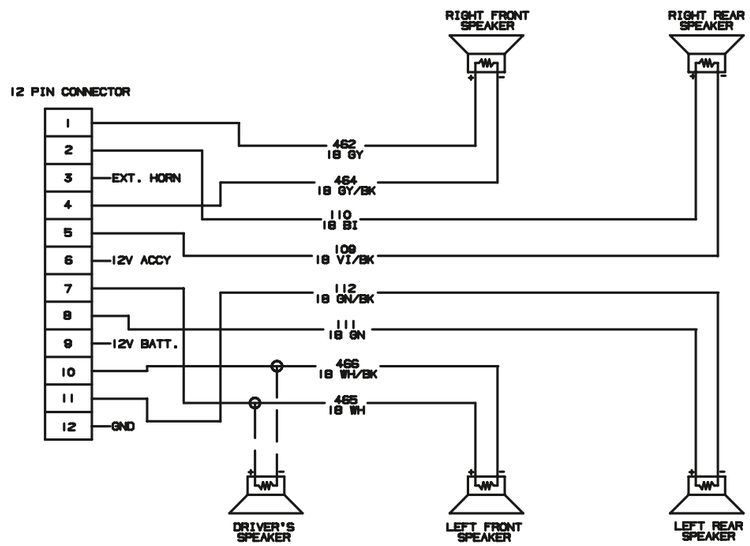

FOUR (4) SPEAKER SYSTEM
USE HARNESS # 52002787

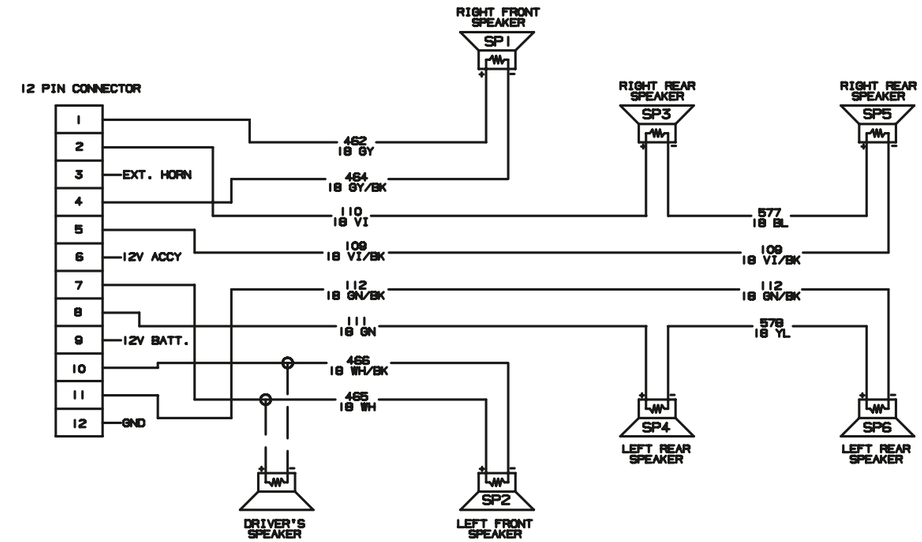

SIX (6) SPEAKER SYSTEM
USE HARNESS #52002795

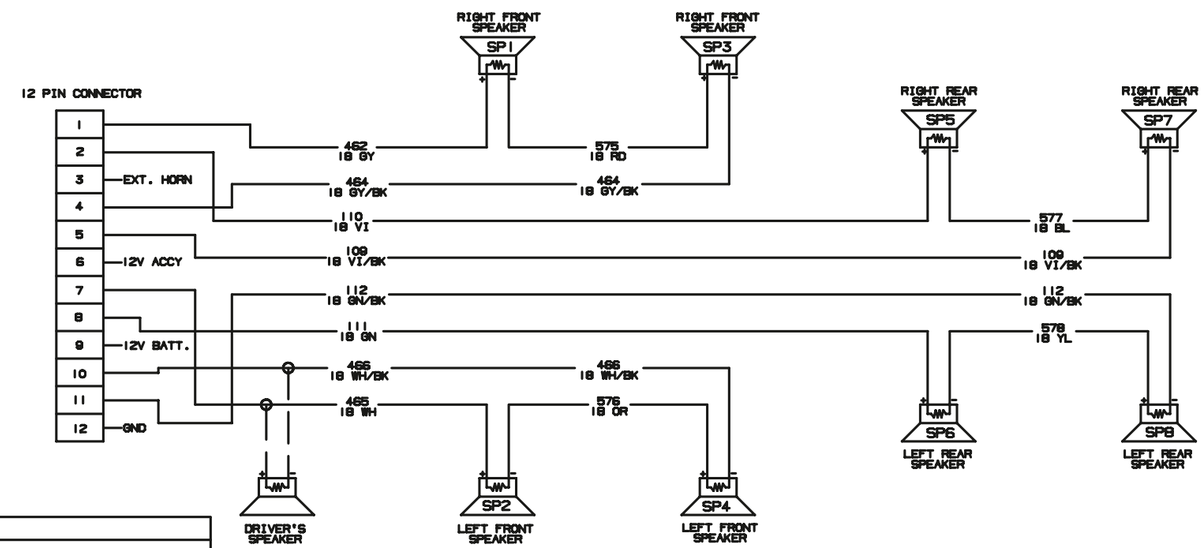

EIGHT (8) SPEAKER SYSTEM
USE HARNESS #52002805

CIR	GA	COLOR	DESCRIPTION
109	18	VIOLET/BLACK	RIGHT REAR SPEAKER (-)
110	18	VIOLET	RIGHT REAR SPEAKER (+)
111	18	GREEN	LEFT REAR SPEAKER (+)
112	18	GREEN/BLACK	LEFT REAR SPEAKER (-)
462	18	GRAY	RIGHT FRONT SPEAKER (+)
464	18	GRAY/BLACK	RIGHT FRONT SPEAKER (-)
465	18	WHITE	LEFT FRONT SPEAKER (+)
466	18	WHITE/BLACK	LEFT FRONT SPEAKER (-)
575	18	RED	FROM SP1(-) TO SP3(+)
576	18	ORANGE	FROM SP2(-) TO SP4(+)
577	18	BLUE	FROM SP5(-) TO SP7(+)
578	18	YELLOW	FROM SP6(-) TO SP8(+)

Thomas BUILT BUSES

52002786 B

RADIO SPEAKERS

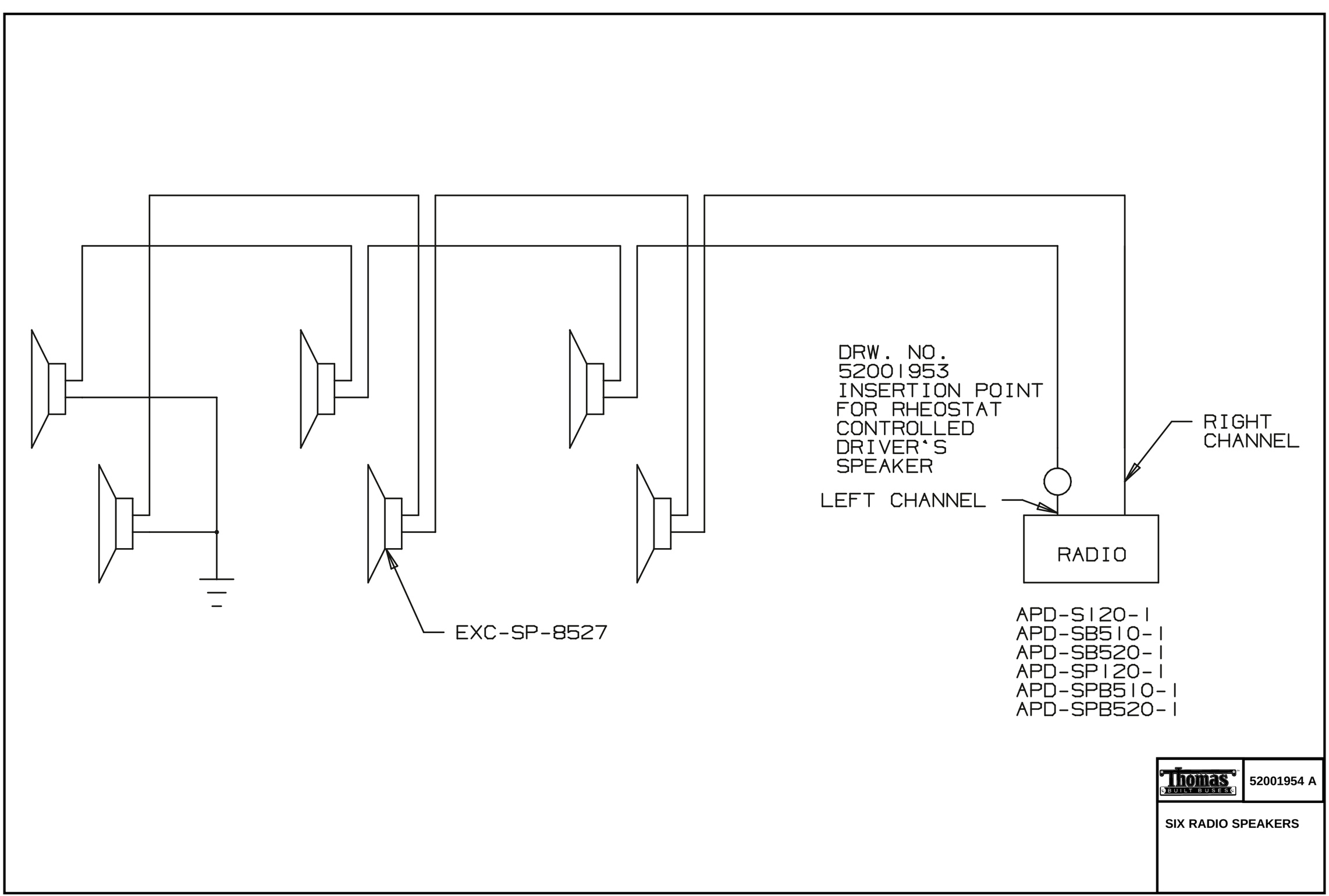
DRW. NO.
52001953
INSERTION POINT
FOR RHEOSTAT
CONTROLLED
DRIVER'S
SPEAKER
RIGHT
CHANNEL
LEFT CHANNEL
RADIO
EXC-SP-8527
APD-S120-1
APD-SB510-1
APD-SB520-1
APD-SP120-1
APD-SPB510-1
APD-SPB520-1
Thomas
BUILT BUSES
52001954 A
SIX RADIO SPEAKERS

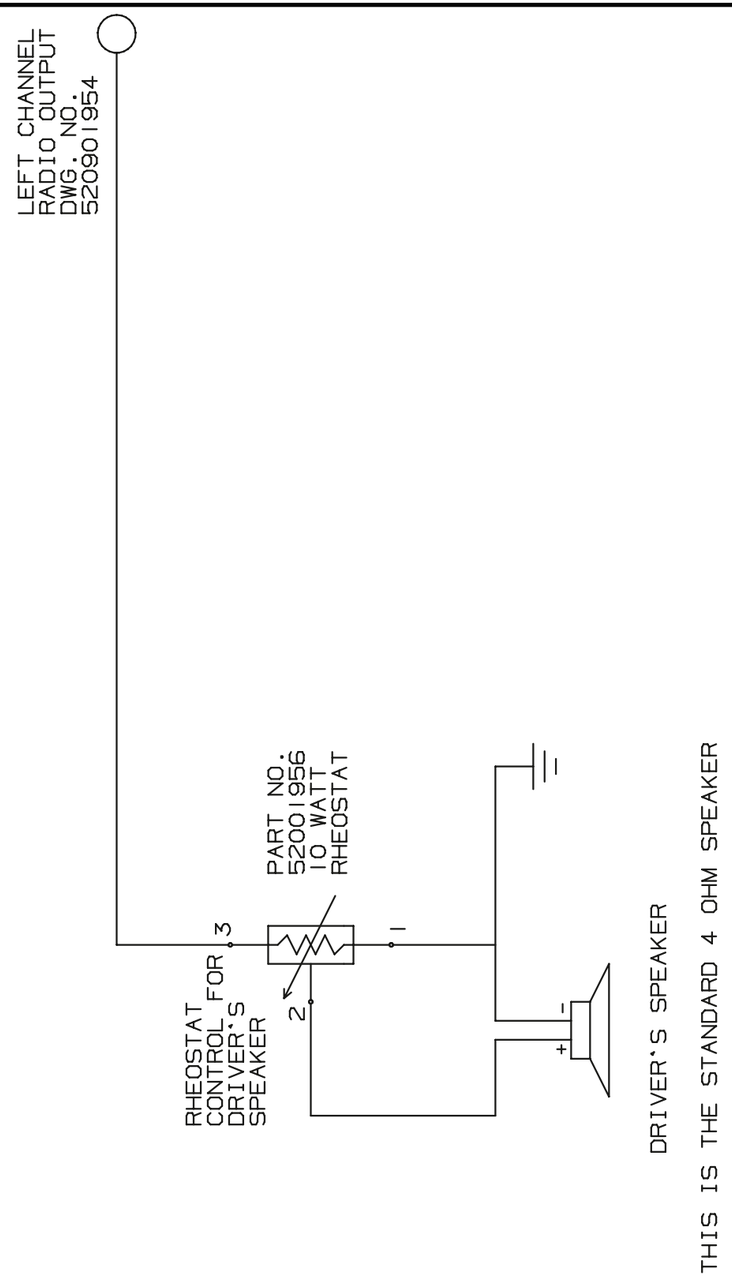

Thomas BUILT BUSES

52001953 A

RHEOSTAT CONTROLLED DRIVER'S SPEAKER

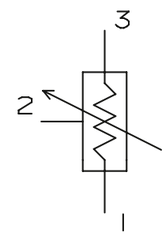

WIRING DIAGRAM

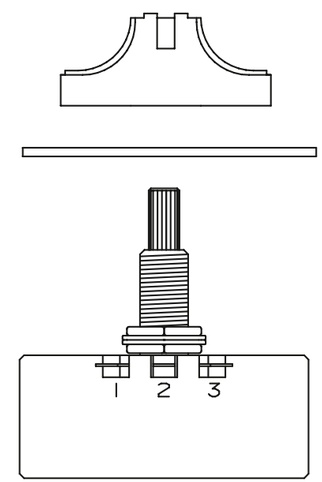

PART NO. 958-8575
10 WATT AUDIO RHEOSTAT

RHEOSTAT SHOULD BE POSITIONED IN THE RADIO BOX ON PUSHERS AND FORWARD CONTROLS. IT SHOULD BE POSITIONED IN THE BULK HEAD BESIDE THE RADIO BOX ON VISTAS. CENTER ANY AVAILABLE KNOCKOUT ON CONVENTIONAL ELECTRICAL PANEL, IF NONE ARE AVAILABLE, POSITION RHEOSTAT JUST TO THE RIGHT IN THE SPACE PROVIDED.

Thomas BUILT BUSES

52001956 A

RHEOSTAT - 10 WATT SINGLE LINE AUDIO

NOTES:

MVP-ER
MISCELLANEOUS
SCHEMATICS

LAMP FUNCTION:	DORAN #	TBB CIR #	OLD TBB CIR #	TBB COLOR	OLD TBB COLOR
RED WARNING LAMP RIGHT INPUT	4A	160	160	BK	BK
RED WARNING LAMP RIGHT FRONT OUTPUT	1A	216	2	BR	BR
RED WARNING LAMP RIGHT REAR OUTPUT	6A	217	3	OR	OR
AMBER WARNING LAMP RIGHT INPUT	2A	164	164	BL	YE/BL
AMBER WARNING LAMP RIGHT FRONT OUTPUT	3A	220	6	WH	WH
AMBER WARNING LAMP RIGHT REAR OUTPUT	5A	221	7	RD	RD
RED WARNING LAMP LEFT INPUT	4B	162	162	OR	RD/BL
RED WARNING LAMP LEFT FRONT OUTPUT	1B	218	4	YE	YE
RED WARNING LAMP LEFT REAR OUTPUT	6B	215	1	BK	BK
AMBER WARNING LAMP LEFT INPUT	2B	166	166	RD	YE/BK
AMBER WARNING LAMP LEFT FRONT OUTPUT	3B	222	8	GR	GR
AMBER WARNING LAMP LEFT REAR OUTPUT	5B	219	5	BL	BL
TURN SIGNAL LAMP RIGHT REAR OUTPUT	3C	9	9	GR	GR
TURN SIGNAL LAMP RIGHT REAR INPUT	4C	175	175	GR	GR
TURN SIGNAL LAMP LEFT REAR INPUT	2D	174	174	YE	YE
TURN SIGNAL LAMP LEFT REAR OUTPUT	3D	10	10	YE	YE
STOP LAMP - INPUT	1C	172	172	RD	RD
STOP LAMP RIGHT - OUTPUT	2C	16	16	RD/WH	RD/WH
STOP LAMP LEFT - OUTPUT	1D	15	15	RD	RD
TAIL LAMP - INPUT	7D	168	168	BR	BR
TAIL LAMP RIGHT - OUTPUT	7C	11	11	BR	BR
TAIL LAMP LEFT - OUTPUT	8D	12	12	BR/WH	BR/WH
BACK-UP LAMP - INPUT	6C	170	170	BL	BL
BACK-UP LAMP RIGHT OUTPUT	8C	13	13	BL	BL
BACK-UP LAMP LEFT OUTPUT	5D	14	14	BL/WH	BL/WH
12 VOLT D.C. POSITIVE	4D	176	176	BK	BK
GROUND	6D	177	177	WH	WH
OPEN CAVITY	5C	------	------	------	------

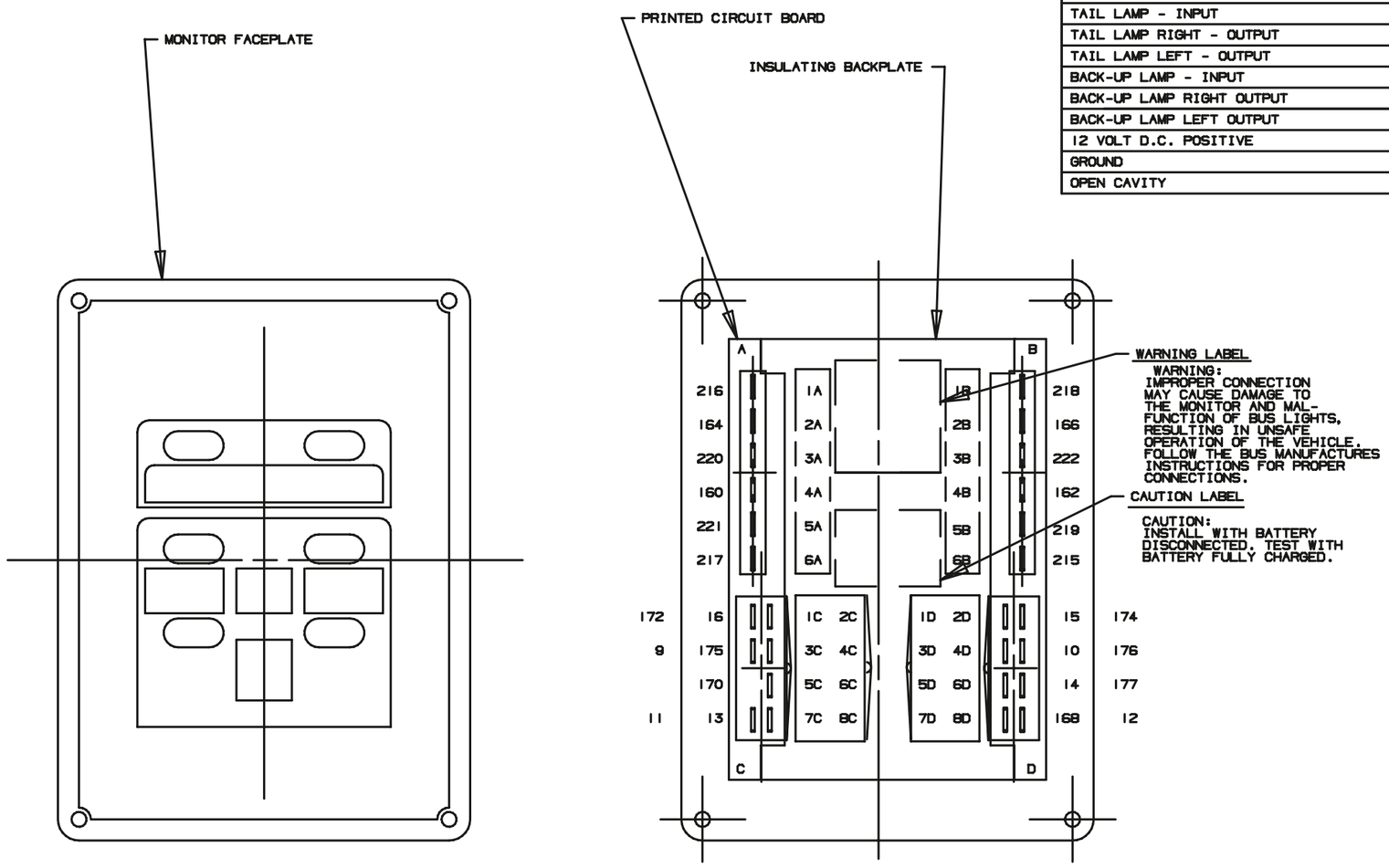

Thomas BUILT BUSES

52001932 A

DORAN MONITOR
ALL MODELS

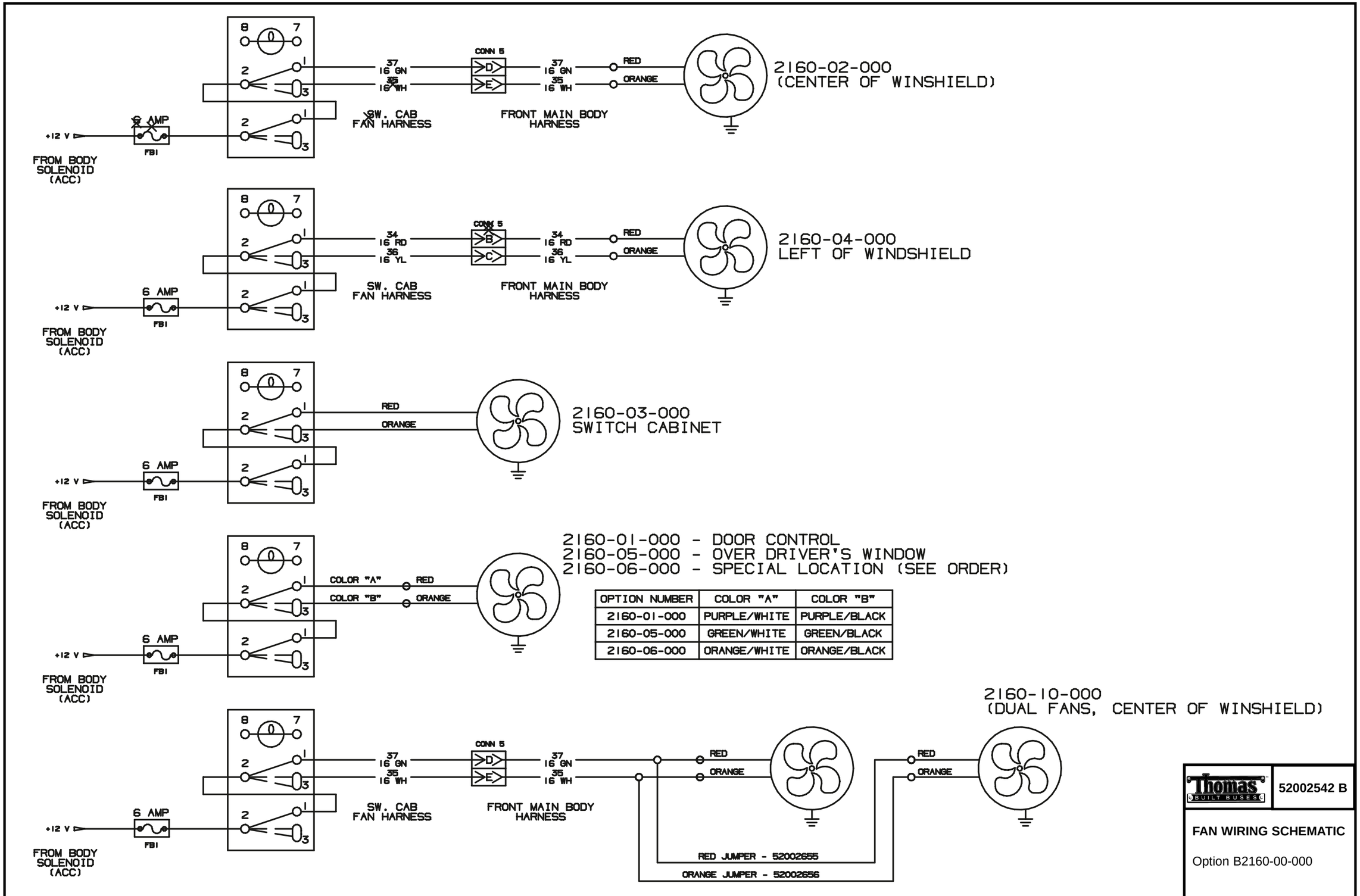

OPTION NUMBER	COLOR "A"	COLOR "B"
2160-01-000	PURPLE/WHITE	PURPLE/BLACK
2160-05-000	GREEN/WHITE	GREEN/BLACK
2160-06-000	ORANGE/WHITE	ORANGE/BLACK

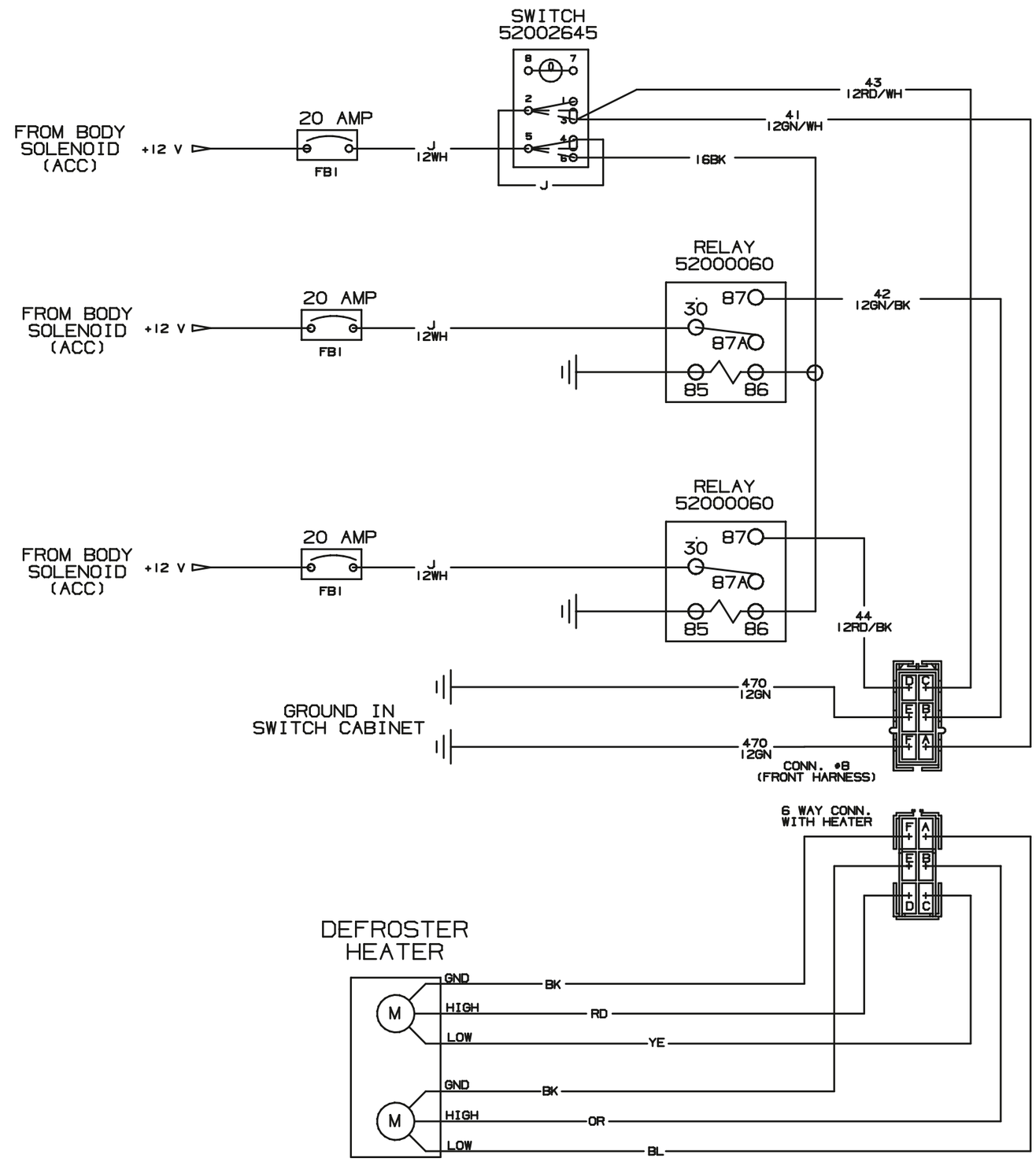

Thomas BUILT BUSES

52002767 A

SINGLE DEFROSTER SWITCH

Option: B3826-00-000

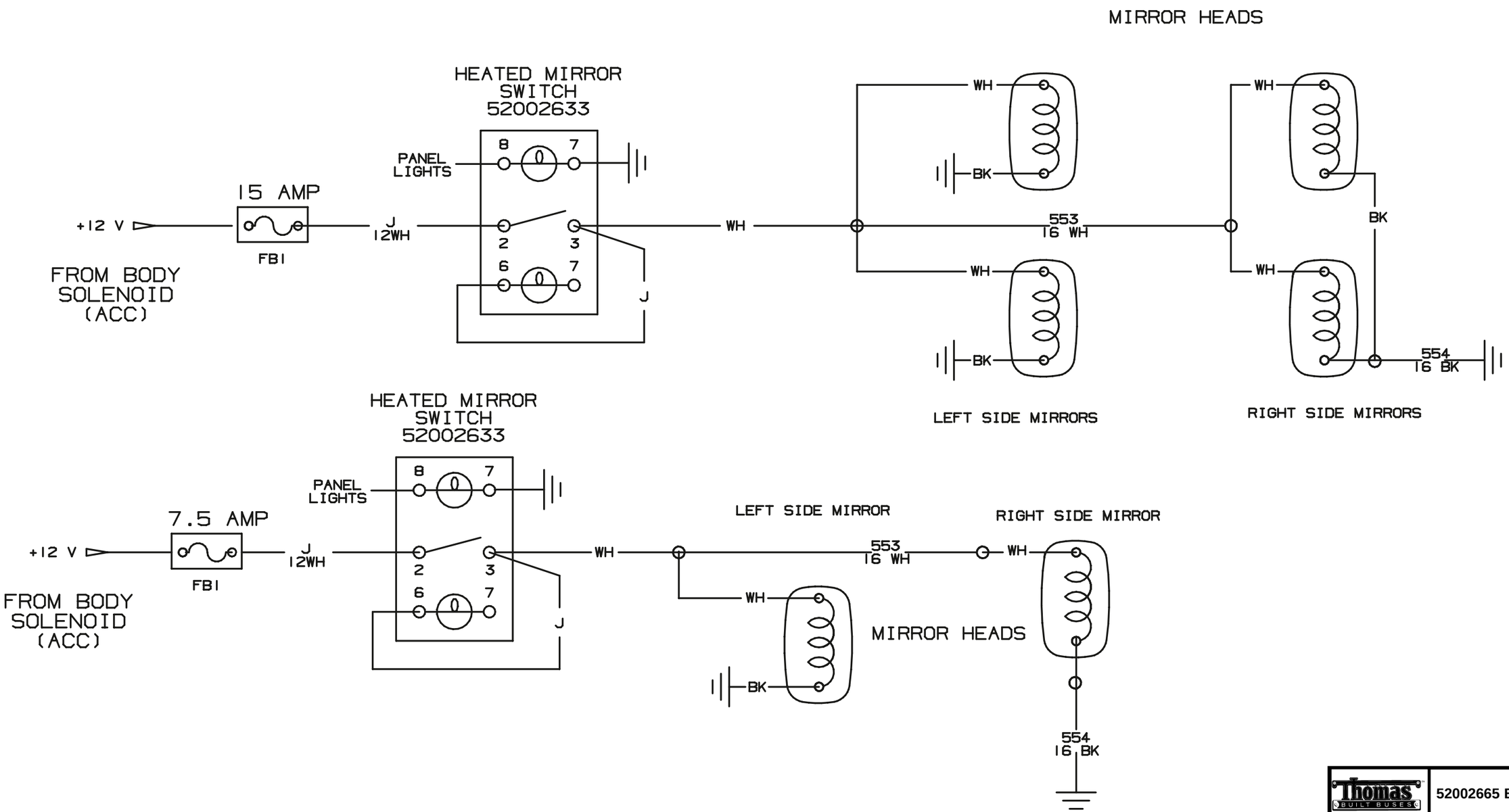

Thomas BUILT BUSES

52002665 B

HEATED MIRRORS

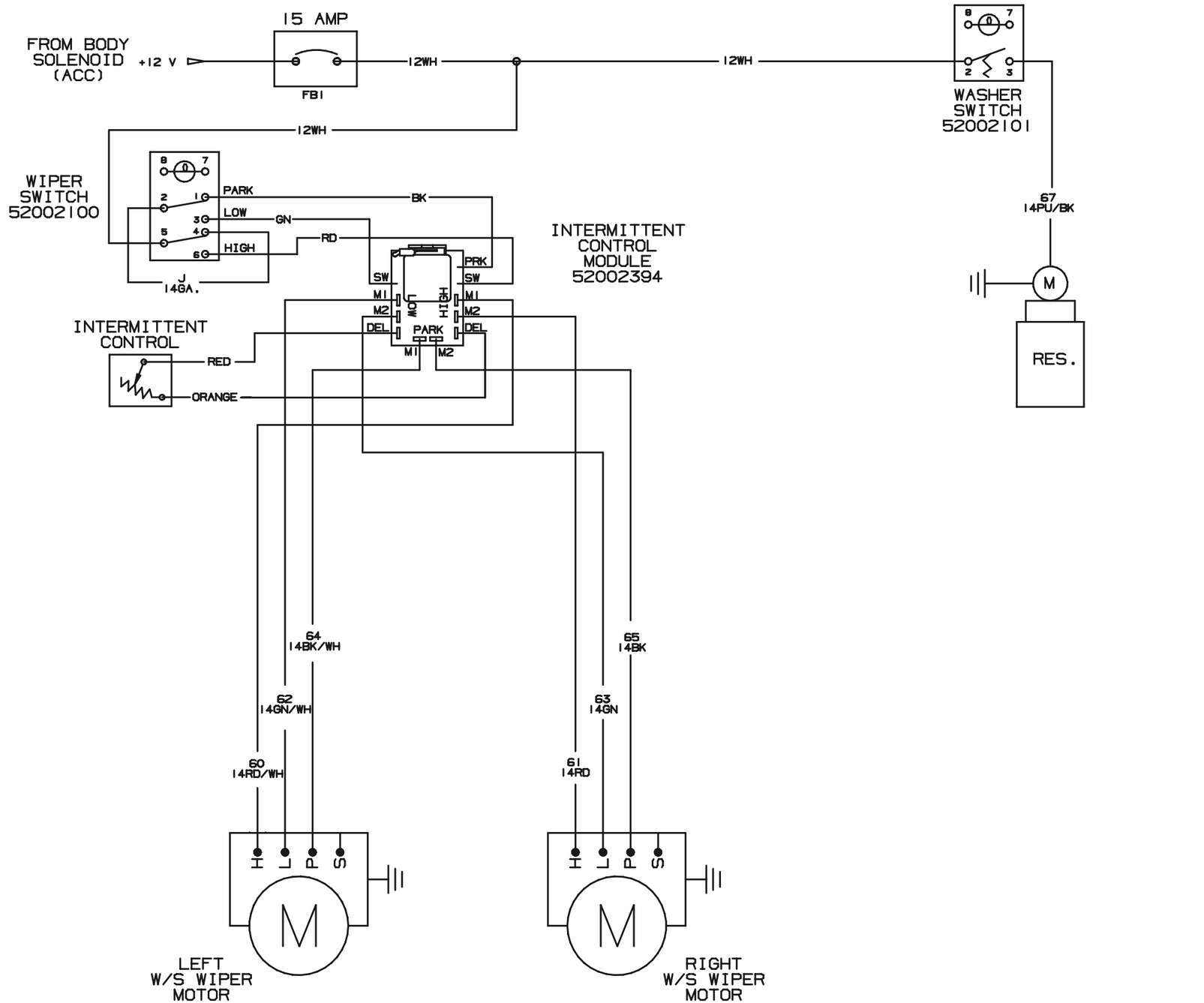

OPTION B3826-04-000

Thomas BUILT BUSES

52002416 B

INTERMITTENT WIND-SHIELD WIPER, DUAL WITH MODULE

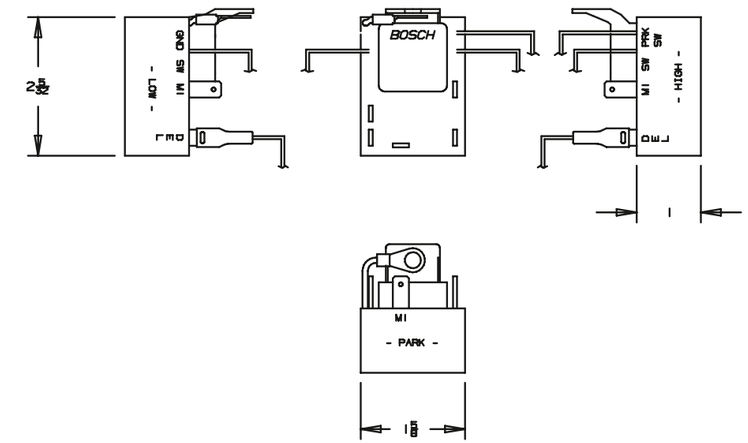

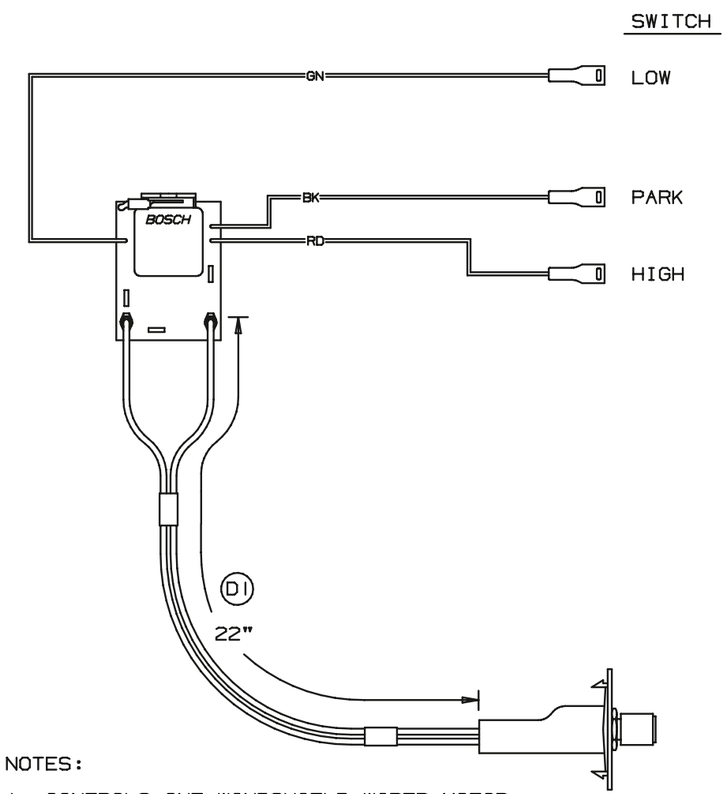

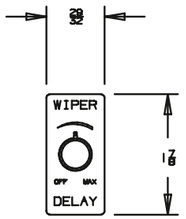

NOTES:

1. CONTROLS ONE WINDSHIELD WIPER MOTOR.
2. DELAY TIME 1-20 SECONDS ±25%

VENDOR: RCM INC.

VENDOR PART NO.: 1022-WD

Thomas BUILT BUSES

52002395 D

MODULE, INTERMITTENT RELAY, FOR SINGLE WIPER MOTOR

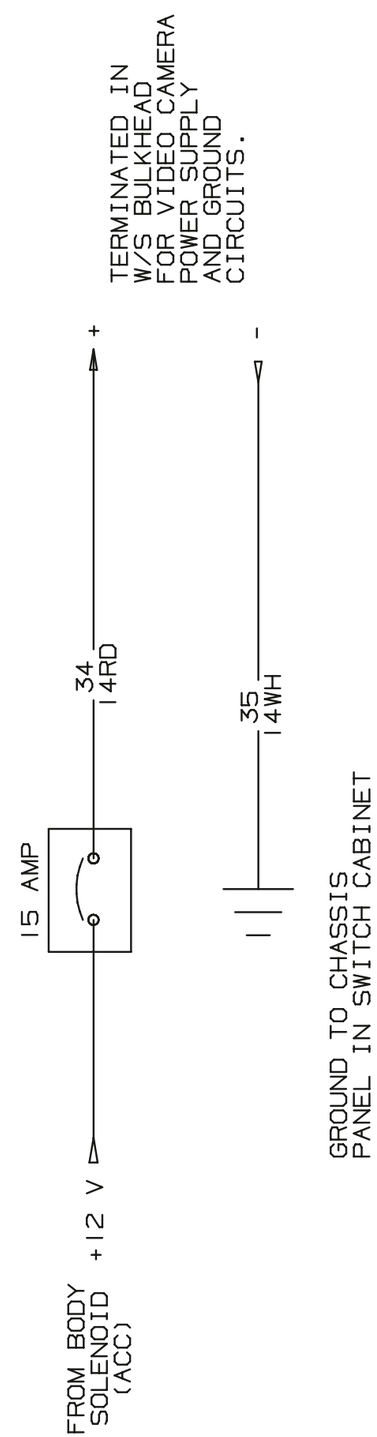

Thomas BUILT BUSES

52002280 A

VIDEO CAMERA SUPPLY AND GROUND CIRCUIT, (SOUTH CAROLINA)

CIR	GA.	COLOR	CIRCUIT DESCRIPTION
107	14	BLACK	BACKING ALARM

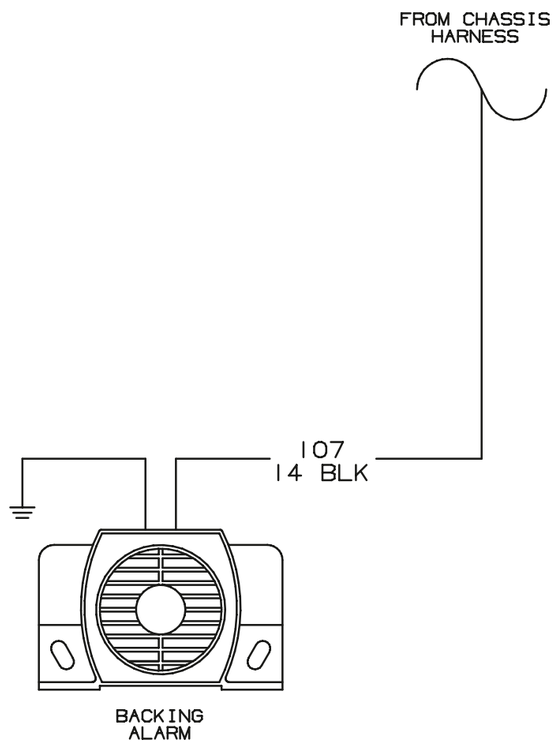

BACKING ALARM
OPTION B2310-02-000
OR
OPTION B2310-03-000

Thomas BUILT BUSES 52002608 A

BACKING ALARM

CIR	GA.	COLOR	CIRCUIT DESCRIPTION
476	16	WHITE	ALARM SIGNAL FROM MODULE

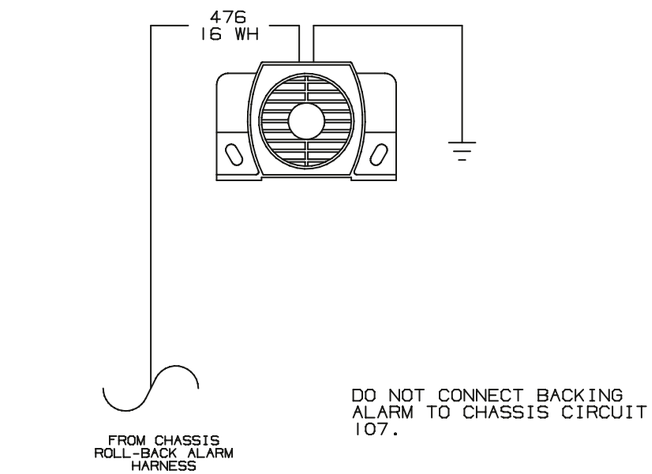

DO NOT CONNECT BACKING ALARM TO CHASSIS CIRCUIT 107.

FOR ADDITIONAL INFORMATION, SEE CHASSIS SCHEMATIC 62202592

ROLL-BACK ALARM
OPTION B2310-04-000 (STD-ER)
OPTION B2310-07-000 (MVP-ER)

Thomas BUILT BUSES 52002593 A

ROLL BACK ALARM

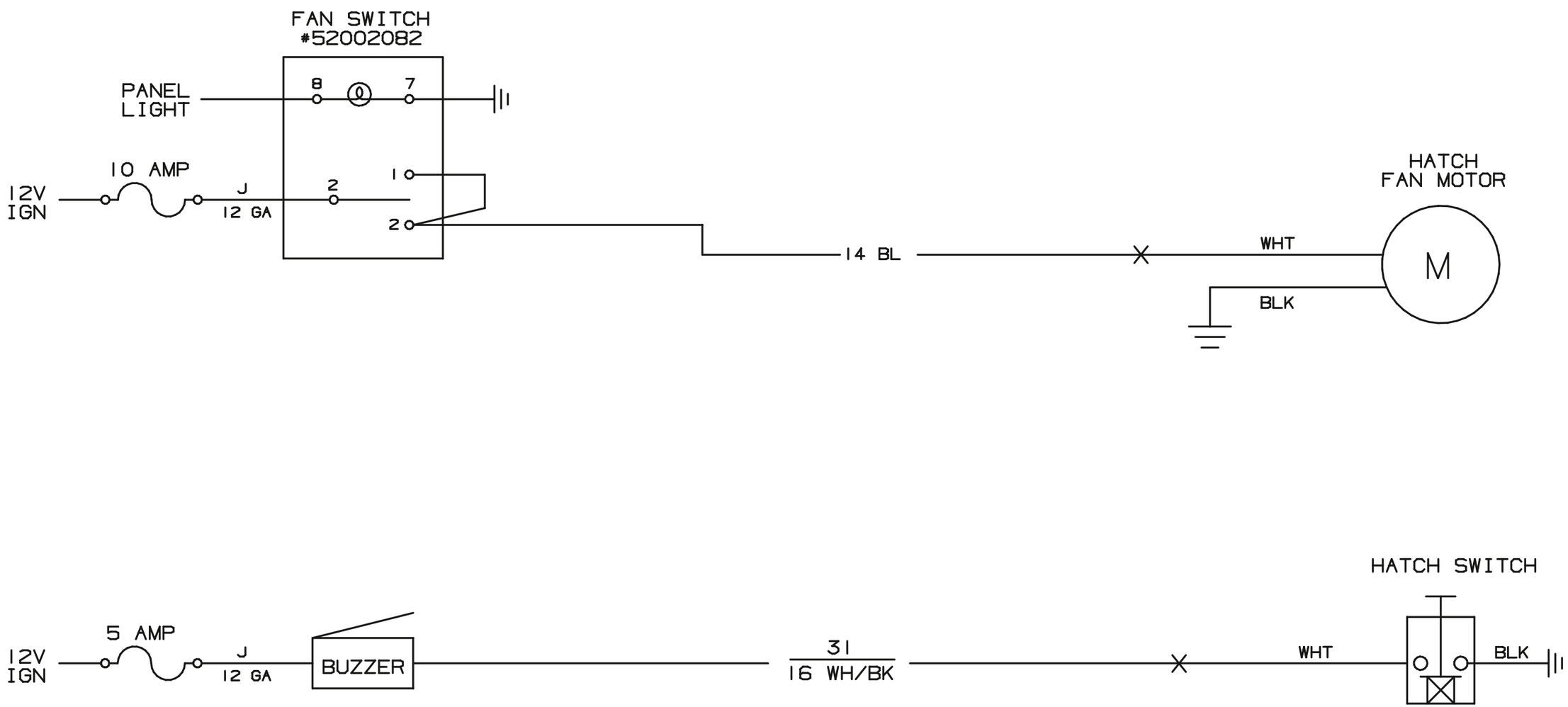

Thomas BUILT BUSES

52002392 A

ROOF ESCAPE HATCH
w/POWER VENT (TRANSPEC,
MODEL 1600)

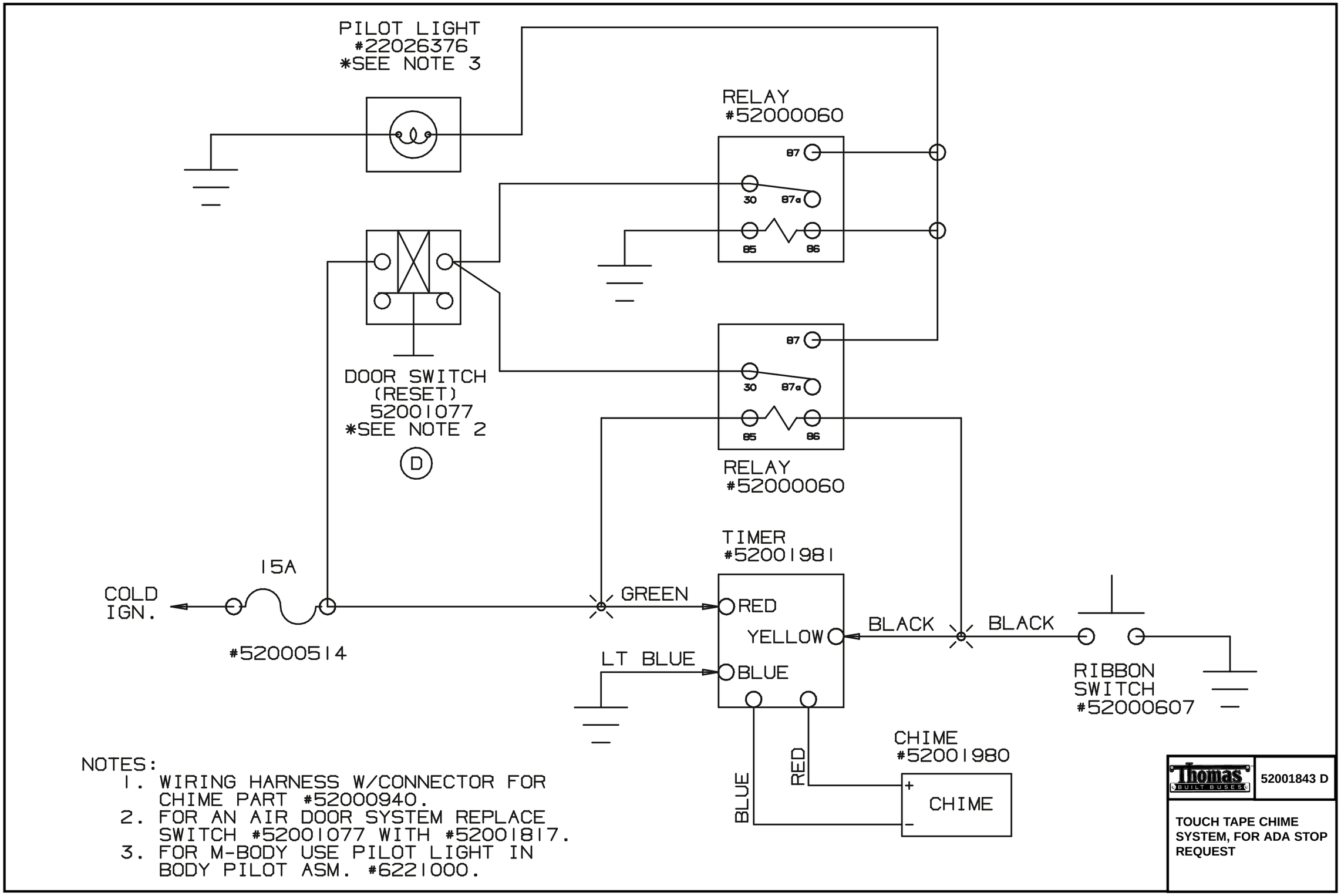
PILOT LIGHT
#22026376
*SEE NOTE 3
RELAY
#52000060
87
30
87a
85
86
DOOR SWITCH
(RESET)
52001077
*SEE NOTE 2
D
RELAY
#52000060
TIMER
#52001981
15A
COLD
IGN.
#52000514
GREEN
RED
YELLOW
BLUE
LT BLUE
BLACK
BLACK
RIBBON
SWITCH
#52000607
CHIME
#52001980
CHIME
BLUE
RED
NOTES:
1. WIRING HARNESS W/CONNECTOR FOR CHIME PART #52000940.
2. FOR AN AIR DOOR SYSTEM REPLACE SWITCH #52001077 WITH #52001817.
3. FOR M-BODY USE PILOT LIGHT IN BODY PILOT ASM. #6221000.
Thomas BUILT BUSES
52001843 D
TOUCH TAPE CHIME SYSTEM, FOR ADA STOP REQUEST

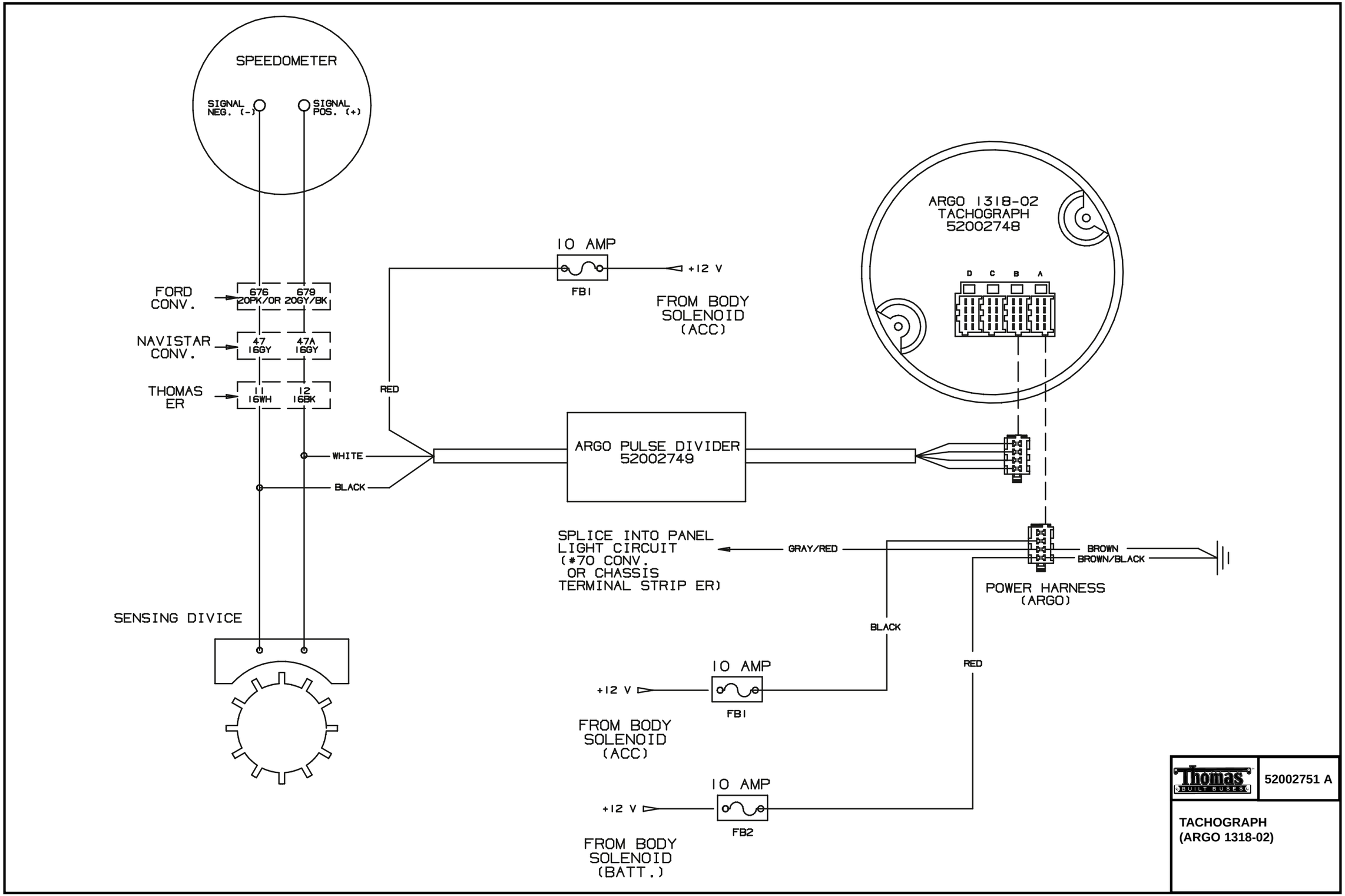
SPEEDOMETER
SIGNAL NEG. (-)
SIGNAL POS. (+)
FORD CONV.
676 20PK/OR
679 20GY/BK
NAVISTAR CONV.
47 16GY
47A 16GY
THOMAS ER
11 16WH
12 16BK
WHITE
BLACK
RED
10 AMP
FB1
+12 V
FROM BODY SOLENOID (ACC)
ARGO PULSE DIVIDER 52002749
ARGO 1318-02 TACHOGRAPH 52002748
D C B A
SPLICE INTO PANEL LIGHT CIRCUIT (#70 CONV. OR CHASSIS TERMINAL STRIP ER)
GRAY/RED
BROWN
BROWN/BLACK
POWER HARNESS (ARGO)
SENSING DIVICE
BLACK
RED
10 AMP
+12 V
FB1
FROM BODY SOLENOID (ACC)
10 AMP
+12 V
FB2
FROM BODY SOLENOID (BATT.)
Thomas BUILT BUSES
52002751 A
TACHOGRAPH (ARGO 1318-02)

NOTES:

MVP-ER
MAIN CHASSIS
SCHEMATICS

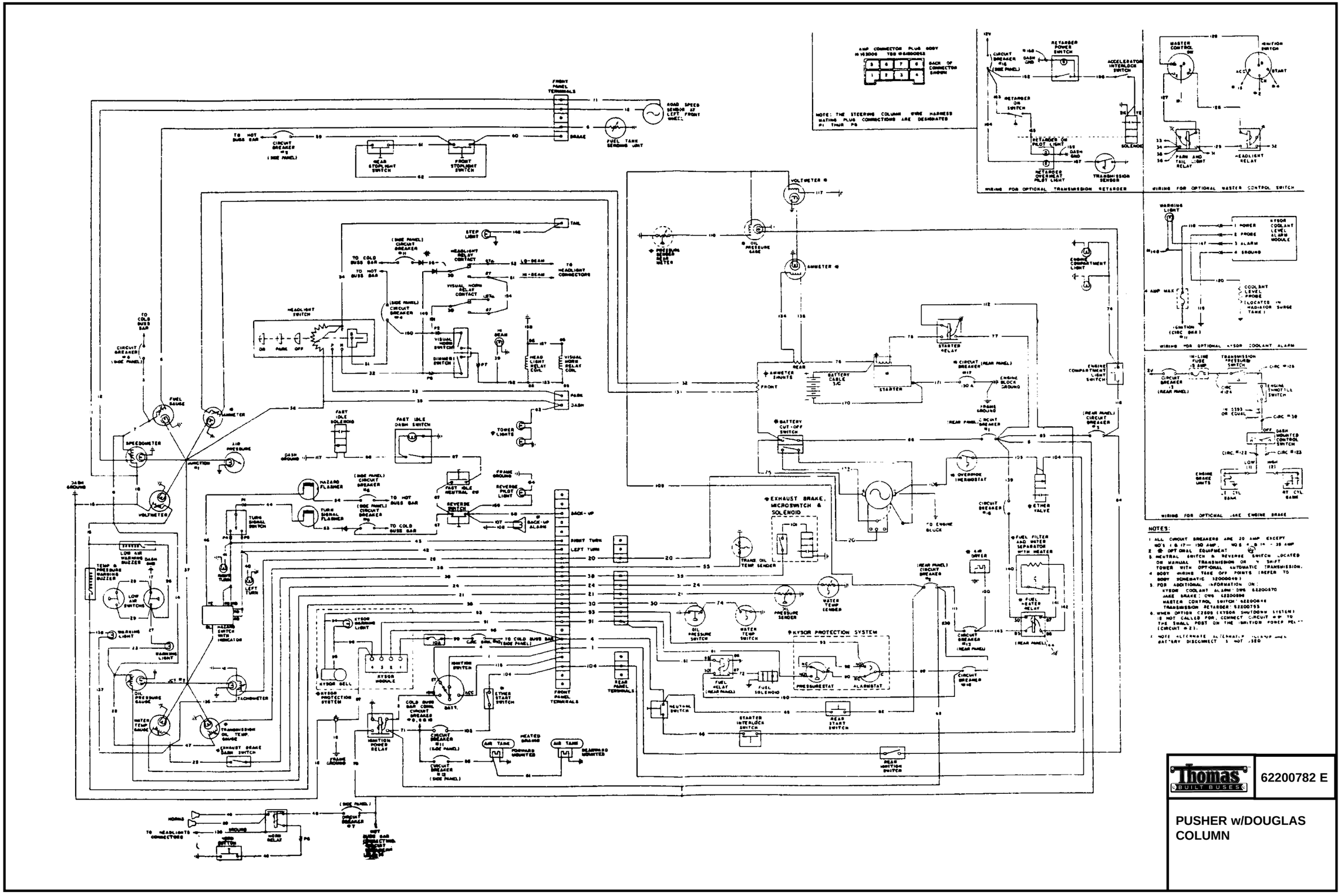
Thomas BUILT BUSES
62200782 E
PUSHER w/DOUGLAS COLUMN
NOTES:
WIRING FOR OPTIONAL TRANSMISSION RETARDER
WIRING FOR OPTIONAL MASTER CONTROL SWITCH
WIRING FOR OPTIONAL KYSOR COOLANT ALARM
WIRING FOR OPTIONAL JAKE ENGINE BRAKE
EXHAUST BRAKE, MICROSWITCH & SOLENOID
KYSOR PROTECTION SYSTEM
FRONT PANEL TERMINALS
REAR PANEL TERMINALS

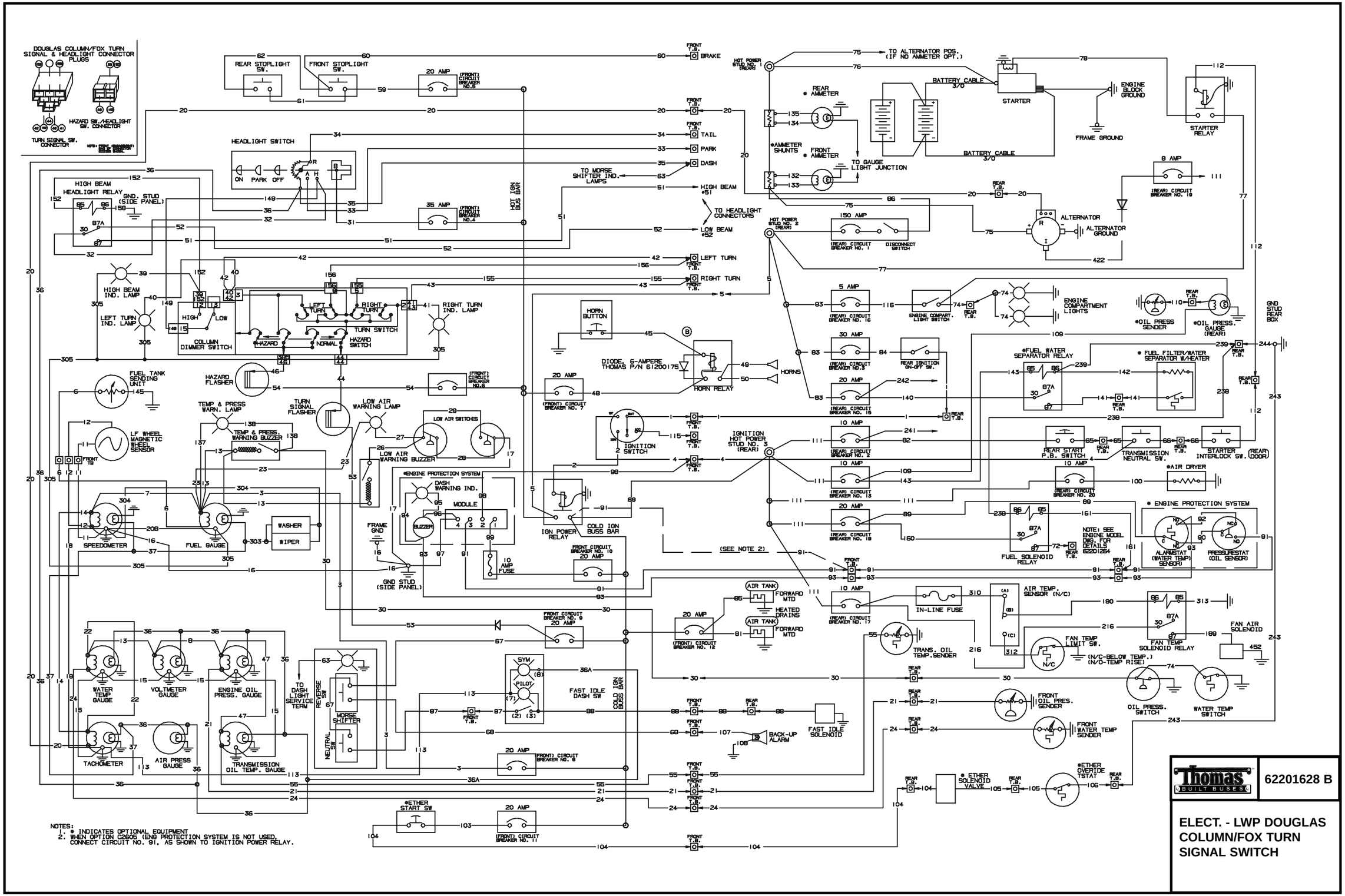

NOTES:
1. * INDICATES OPTIONAL EQUIPMENT
2. WHEN OPTION C2605 (ENG PROTECTION SYSTEM IS NOT USED, CONNECT CIRCUIT NO. 91, AS SHOWN TO IGNITION POWER RELAY.

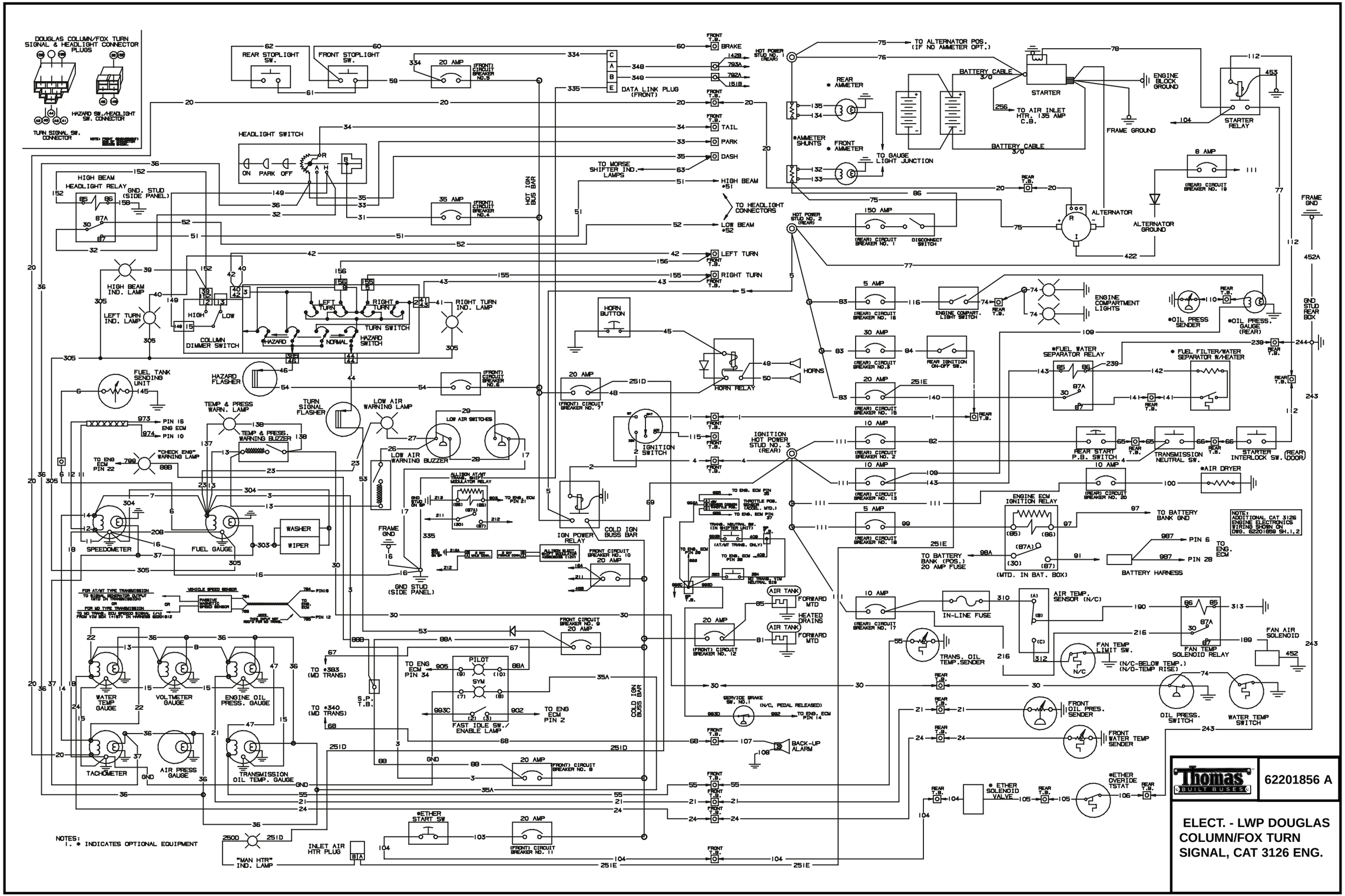
DOUGLAS COLUMN/FOX TURN SIGNAL & HEADLIGHT CONNECTOR PLUGS
HAZARD SW./HEADLIGHT SW. CONNECTOR
TURN SIGNAL SW. CONNECTOR
REAR STOPLIGHT SW.
FRONT STOPLIGHT SW.
20 AMP
(FRONT) CIRCUIT BREAKER NO.5
DATA LINK PLUG (FRONT)
BRAKE
TAIL
PARK
DASH
HIGH BEAM
LOW BEAM
LEFT TURN
RIGHT TURN
HEADLIGHT SWITCH
ON PARK OFF
TO MORSE SHIFTER IND. LAMPS
TO HEADLIGHT CONNECTORS
HOT IGN BUS BAR
35 AMP
(FRONT) CIRCUIT BREAKER NO.4
HIGH BEAM HEADLIGHT RELAY
GND. STUD (SIDE PANEL)
HIGH BEAM IND. LAMP
LEFT TURN IND. LAMP
RIGHT TURN IND. LAMP
COLUMN DIMMER SWITCH
HIGH
LOW
TURN SWITCH
HAZARD
NORMAL
HAZARD SWITCH
FUEL TANK SENDING UNIT
HAZARD FLASHER
TURN SIGNAL FLASHER
TEMP & PRESS WARN. LAMP
TEMP & PRESS. WARNING BUZZER
LOW AIR WARNING LAMP
LOW AIR WARNING BUZZER
LOW AIR SWITCHES
PIN 16 ENG ECM
PIN 10
"CHECK ENG" WARNING LAMP
TO ENG ECM PIN 22
SPEEDOMETER
FUEL GAUGE
WASHER
WIPER
FRAME GND
GND STUD (SIDE PANEL)
VEHICLE SPEED SENSOR
WATER TEMP GAUGE
VOLTMETER GAUGE
ENGINE OIL PRESS. GAUGE
TACHOMETER
AIR PRESS GAUGE
TRANSMISSION OIL TEMP. GAUGE
TO #383 (MD TRANS)
TO #340 (MD TRANS)
S.P. T.B.
PILOT
SYM
FAST IDLE SW./ ENABLE LAMP
TO ENG ECM PIN 34
TO ENG ECM PIN 2
COLD IGN BUSS BAR
IGN POWER RELAY
IGNITION 2 SWITCH
HORN BUTTON
HORN RELAY
HORNS
20 AMP
(FRONT) CIRCUIT BREAKER NO. 7
(FRONT) CIRCUIT BREAKER NO. 6
(FRONT) CIRCUIT BREAKER NO. 9
(FRONT) CIRCUIT BREAKER NO. 8
(FRONT) CIRCUIT BREAKER NO. 11
(FRONT) CIRCUIT BREAKER NO. 12
FRONT CIRCUIT BREAKER NO. 10
ALLISON AT/MT TRANS. SHIFT MODULATOR RELAY
AIR TANK
FORWARD MTD
HEATED DRAINS
SERVICE BRAKE SW. NO.1
(N/C, PEDAL RELEASED)
BACK-UP ALARM
HOT POWER STUD NO. 1 (REAR)
HOT POWER STUD NO. 2 (REAR)
IGNITION HOT POWER STUD NO. 3 (REAR)
REAR AMMETER
FRONT AMMETER
AMMETER SHUNTS
TO GAUGE LIGHT JUNCTION
TO ALTERNATOR POS. (IF NO AMMETER OPT.)
BATTERY CABLE 3/0
STARTER
TO AIR INLET HTR. 135 AMP C.B.
ENGINE BLOCK GROUND
FRAME GROUND
STARTER RELAY
8 AMP
(REAR) CIRCUIT BREAKER NO. 19
ALTERNATOR
ALTERNATOR GROUND
150 AMP
(REAR) CIRCUIT BREAKER NO. 1
DISCONNECT SWITCH
FRAME GND
GND STUD REAR BOX
5 AMP
(REAR) CIRCUIT BREAKER NO. 16
ENGINE COMPART. LIGHT SWITCH
ENGINE COMPARTMENT LIGHTS
30 AMP
(REAR) CIRCUIT BREAKER NO.3
REAR IGNITION ON-OFF SW.
20 AMP
(REAR) CIRCUIT BREAKER NO. 15
10 AMP
(REAR) CIRCUIT BREAKER NO. 2
10 AMP
(REAR) CIRCUIT BREAKER NO. 13
5 AMP
(REAR) CIRCUIT BREAKER NO. 18
10 AMP
(REAR) CIRCUIT BREAKER NO. 17
10 AMP
(REAR) CIRCUIT BREAKER NO. 20
*OIL PRESS SENDER
*OIL PRESS. GAUGE (REAR)
*FUEL WATER SEPARATOR RELAY
* FUEL FILTER/WATER SEPARATOR W/HEATER
REAR START P.B. SWITCH
TRANSMISSION NEUTRAL SW.
STARTER INTERLOCK SW. (REAR DOOR)
*AIR DRYER
ENGINE ECM IGNITION RELAY
(MTD. IN BAT. BOX)
TO BATTERY BANK GND
TO BATTERY BANK (POS.) 20 AMP FUSE
BATTERY HARNESS
PIN 6
PIN 28
TO ENG. ECM
NOTE: ADDITIONAL CAT 3126 ENGINE ELECTRONICS WIRING SHOWN ON DWG. 62201859 SH.1,2
IN-LINE FUSE
AIR TEMP. SENSOR (N/C)
FAN TEMP LIMIT SW.
(N/C-BELOW TEMP.) (N/O-TEMP RISE)
FAN TEMP SOLENOID RELAY
FAN AIR SOLENOID
TRANS. OIL TEMP.SENDER
FRONT OIL PRES. SENDER
FRONT WATER TEMP SENDER
OIL PRESS. SWITCH
WATER TEMP SWITCH
*ETHER SOLENOID VALVE
*ETHER OVERIDE TSTAT
*ETHER START SW
INLET AIR HTR PLUG
"MAN HTR" IND. LAMP
NOTES:
1. * INDICATES OPTIONAL EQUIPMENT
Thomas BUILT BUSES
62201856 A
ELECT. - LWP DOUGLAS COLUMN/FOX TURN SIGNAL, CAT 3126 ENG.

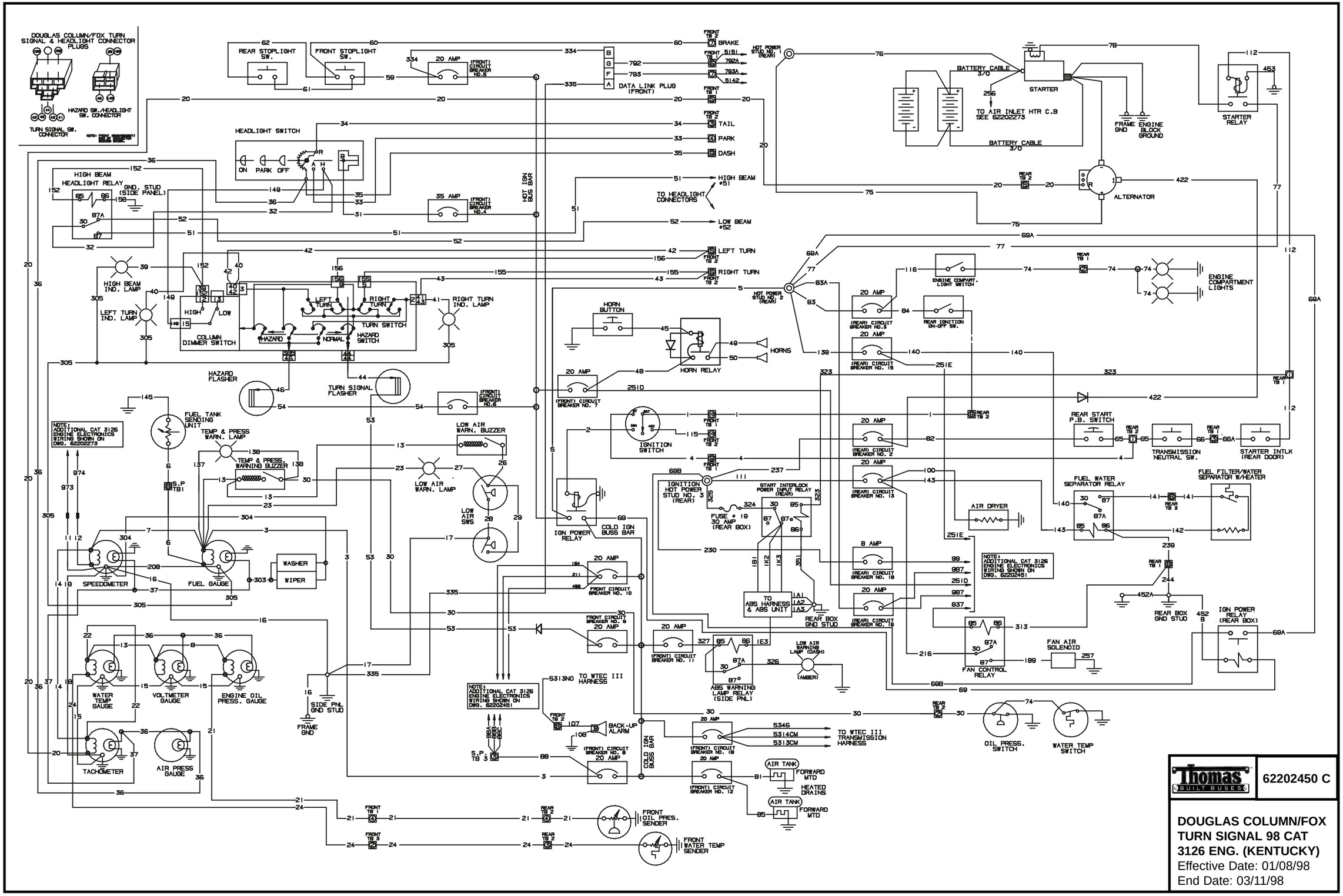

Thomas BUILT BUSES

62202450 C

DOUGLAS COLUMN/FOX TURN SIGNAL 98 CAT 3126 ENG. (KENTUCKY)

Effective Date: 01/08/98

End Date: 03/11/98

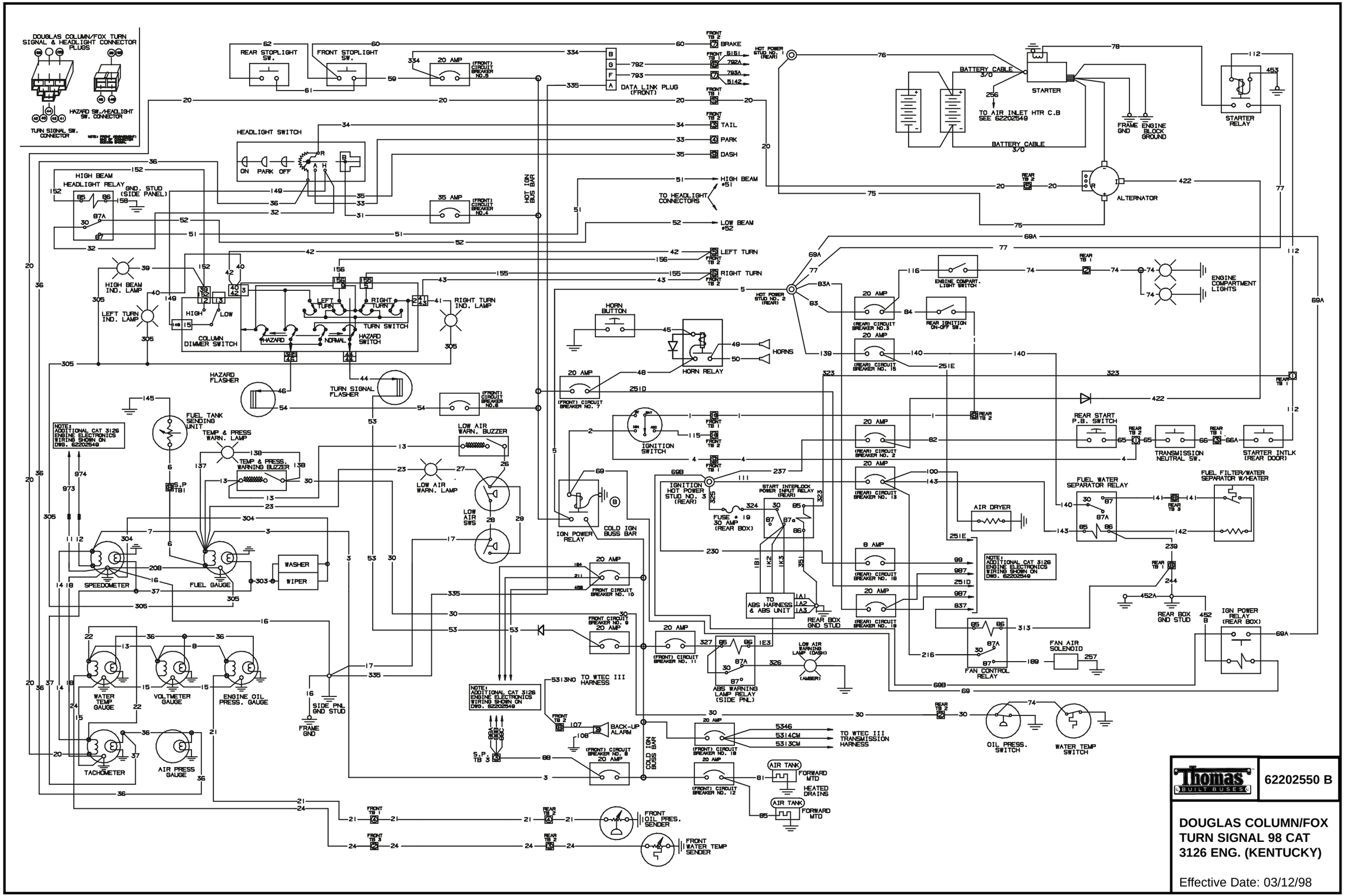
DOUGLAS COLUMN/FOX TURN SIGNAL & HEADLIGHT CONNECTOR PLUGS
HAZARD SW./HEADLIGHT SW. CONNECTOR
TURN SIGNAL SW. CONNECTOR
REAR STOPLIGHT SW.
FRONT STOPLIGHT SW.
20 AMP
(FRONT) CIRCUIT BREAKER NO.5
DATA LINK PLUG (FRONT)
BRAKE
TAIL
PARK
DASH
HIGH BEAM
TO HEADLIGHT CONNECTORS
LOW BEAM
LEFT TURN
RIGHT TURN
HOT POWER STUD NO. 1 (REAR)
BATTERY CABLE 3/0
STARTER
TO AIR INLET HTR C.B SEE 62202549
FRAME GND
ENGINE BLOCK GROUND
STARTER RELAY
ALTERNATOR
HEADLIGHT SWITCH
ON PARK OFF
HIGH BEAM HEADLIGHT RELAY
GND. STUD (SIDE PANEL)
35 AMP
(FRONT) CIRCUIT BREAKER NO.4
HOT IGN BUS BAR
HIGH BEAM IND. LAMP
LEFT TURN IND. LAMP
RIGHT TURN IND. LAMP
COLUMN DIMMER SWITCH
HIGH
LOW
TURN SWITCH
HAZARD SWITCH
HAZARD
NORMAL
HAZARD FLASHER
TURN SIGNAL FLASHER
(FRONT) CIRCUIT BREAKER NO.6
HORN BUTTON
HORN RELAY
HORNS
(FRONT) CIRCUIT BREAKER NO. 7
HOT POWER STUD NO. 2 (REAR)
(REAR) CIRCUIT BREAKER NO.3
ENGINE COMPART. LIGHT SWITCH
REAR IGNITION ON-OFF SW.
ENGINE COMPARTMENT LIGHTS
(REAR) CIRCUIT BREAKER NO. 15
REAR START P.B. SWITCH
TRANSMISSION NEUTRAL SW.
STARTER INTLK (REAR DOOR)
FUEL TANK SENDING UNIT
TEMP & PRESS WARN. LAMP
TEMP & PRESS. WARNING BUZZER
LOW AIR WARN. BUZZER
LOW AIR WARN. LAMP
LOW AIR SWS
IGNITION SWITCH
IGN POWER RELAY
COLD IGN BUSS BAR
IGNITION HOT POWER STUD NO. 3 (REAR)
START INTERLOCK POWER INPUT RELAY (REAR)
FUSE 30 AMP (REAR BOX)
(REAR) CIRCUIT BREAKER NO. 2
(REAR) CIRCUIT BREAKER NO. 13
AIR DRYER
FUEL WATER SEPARATOR RELAY
FUEL FILTER/WATER SEPARATOR W/HEATER
NOTE: ADDITIONAL CAT 3126 ENGINE ELECTRONICS WIRING SHOWN ON DWG. 62202549
8 AMP
(REAR) CIRCUIT BREAKER NO. 18
(REAR) CIRCUIT BREAKER NO. 19
TO ABS HARNESS & ABS UNIT
REAR BOX GND STUD
IGN POWER RELAY (REAR BOX)
FRONT CIRCUIT BREAKER NO. 10
FRONT CIRCUIT BREAKER NO. 9
(FRONT) CIRCUIT BREAKER NO. 11
LOW AIR WARNING LAMP (DASH)
ABS WARNING LAMP RELAY (SIDE PNL)
FAN CONTROL RELAY
FAN AIR SOLENOID
SPEEDOMETER
FUEL GAUGE
WASHER
WIPER
WATER TEMP GAUGE
VOLTMETER GAUGE
ENGINE OIL PRESS. GAUGE
TACHOMETER
AIR PRESS GAUGE
SIDE PNL GND STUD
FRAME GND
TO WTEC III HARNESS
BACK-UP ALARM
(FRONT) CIRCUIT BREAKER NO. 8
(FRONT) CIRCUIT BREAKER NO. 18
TO WTEC III TRANSMISSION HARNESS
(FRONT) CIRCUIT BREAKER NO. 12
AIR TANK
FORWARD MTD
HEATED DRAINS
OIL PRESS. SWITCH
WATER TEMP SWITCH
FRONT OIL PRES. SENDER
FRONT WATER TEMP SENDER
Thomas BUILT BUSES
62202550 B
DOUGLAS COLUMN/FOX TURN SIGNAL 98 CAT 3126 ENG. (KENTUCKY)
Effective Date: 03/12/98

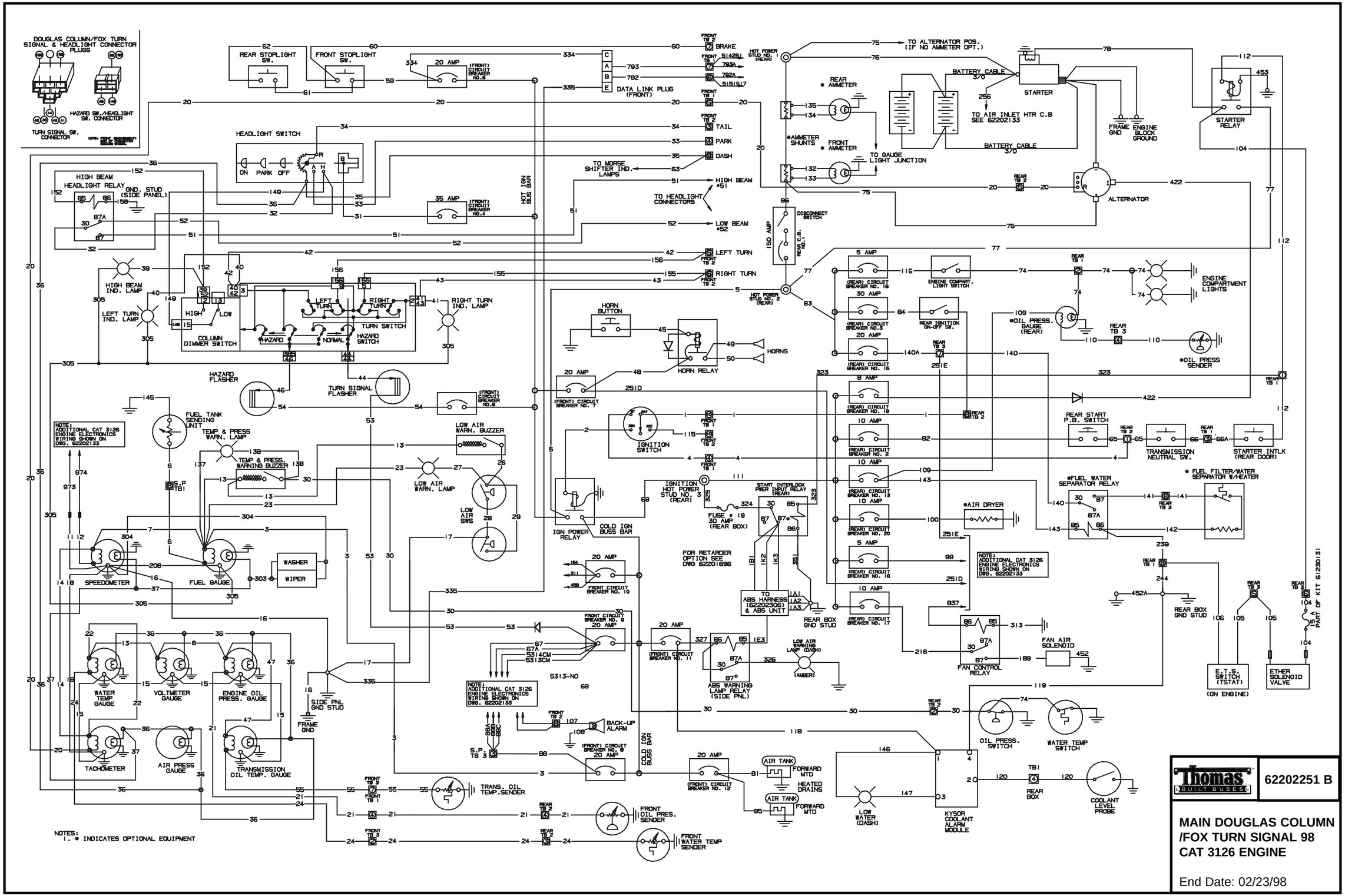
DOUGLAS COLUMN/FOX TURN SIGNAL & HEADLIGHT CONNECTOR PLUGS
HAZARD SW./HEADLIGHT SW. CONNECTOR
TURN SIGNAL SW. CONNECTOR
REAR STOPLIGHT SW.
FRONT STOPLIGHT SW.
20 AMP
(FRONT) CIRCUIT BREAKER NO.8
DATA LINK PLUG (FRONT)
BRAKE
TAIL
PARK
DASH
HIGH BEAM
LEFT TURN
RIGHT TURN
HEADLIGHT SWITCH
ON PARK OFF
TO MORSE SHIFTER IND. LAMPS
TO HEADLIGHT CONNECTORS
LOW BEAM
HOT IGN BUS BAR
35 AMP
(FRONT) CIRCUIT BREAKER NO.4
HIGH BEAM HEADLIGHT RELAY
GND. STUD (SIDE PANEL)
HIGH BEAM IND. LAMP
LEFT TURN IND. LAMP
RIGHT TURN IND. LAMP
COLUMN DIMMER SWITCH
TURN SWITCH
HAZARD SWITCH
HAZARD
NORMAL
HAZARD FLASHER
TURN SIGNAL FLASHER
(FRONT) CIRCUIT BREAKER NO.5
FUEL TANK SENDING UNIT
TEMP & PRESS WARN. LAMP
TEMP & PRESS. WARNING BUZZER
LOW AIR WARN. BUZZER
LOW AIR WARN. LAMP
LOW AIR SWS
NOTE: ADDITIONAL CAT 3126 ENGINE ELECTRONICS WIRING SHOWN ON DWG. 62202133
SPEEDOMETER
FUEL GAUGE
WASHER
WIPER
WATER TEMP GAUGE
VOLTMETER GAUGE
ENGINE OIL PRESS. GAUGE
TACHOMETER
AIR PRESS GAUGE
TRANSMISSION OIL TEMP. GAUGE
SIDE PNL GND STUD
FRAME GND
HORN BUTTON
HORN RELAY
HORNS
(FRONT) CIRCUIT BREAKER NO. 7
IGNITION SWITCH
IGN POWER RELAY
COLD IGN BUSS BAR
FRONT CIRCUIT BREAKER NO. 10
FRONT CIRCUIT BREAKER NO. 9
5313-NO
BACK-UP ALARM
(FRONT) CIRCUIT BREAKER NO. 8
(FRONT) CIRCUIT BREAKER NO. 11
(FRONT) CIRCUIT BREAKER NO. 12
TRANS. OIL TEMP.SENDER
FRONT OIL PRES. SENDER
FRONT WATER TEMP SENDER
NOTES:
1. * INDICATES OPTIONAL EQUIPMENT
TO ALTERNATOR POS. (IF NO AMMETER OPT.)
HOT POWER STUD NO. 1 (REAR)
REAR * AMMETER
*AMMETER SHUNTS
FRONT * AMMETER
TO GAUGE LIGHT JUNCTION
BATTERY CABLE 3/0
STARTER
TO AIR INLET HTR C.B SEE 62202133
FRAME GND
ENGINE BLOCK GROUND
STARTER RELAY
ALTERNATOR
DISCONNECT SWITCH
150 AMP
REAR C.B. NO.1
HOT POWER STUD NO. 2 (REAR)
5 AMP
(REAR) CIRCUIT BREAKER NO. 16
ENGINE COMPART. LIGHT SWITCH
ENGINE COMPARTMENT LIGHTS
30 AMP
(REAR) CIRCUIT BREAKER NO.3
REAR IGNITION ON-OFF SW.
*OIL PRESS. GAUGE (REAR)
*OIL PRESS SENDER
20 AMP
(REAR) CIRCUIT BREAKER NO. 15
8 AMP
(REAR) CIRCUIT BREAKER NO. 19
10 AMP
(REAR) CIRCUIT BREAKER NO. 2
(REAR) CIRCUIT BREAKER NO. 13
(REAR) CIRCUIT BREAKER NO. 20
(REAR) CIRCUIT BREAKER NO. 18
(REAR) CIRCUIT BREAKER NO. 17
REAR START P.B. SWITCH
TRANSMISSION NEUTRAL SW.
STARTER INTLK (REAR DOOR)
*FUEL WATER SEPARATOR RELAY
* FUEL FILTER/WATER SEPARATOR W/HEATER
*AIR DRYER
START INTERLOCK PWR INPUT RELAY (REAR)
IGNITION HOT POWER STUD NO. 3 (REAR)
FUSE # 19 30 AMP (REAR BOX)
FOR RETARDER OPTION SEE DWG 62201696
TO ABS HARNESS (62202306) & ABS UNIT
REAR BOX GND STUD
ABS WARNING LAMP RELAY (SIDE PNL)
LOW AIR WARNING LAMP (DASH)
(AMBER)
FAN CONTROL RELAY
FAN AIR SOLENOID
REAR BOX GND STUD
E.T.S. SWITCH (TSTAT)
(ON ENGINE)
ETHER SOLENOID VALVE
PART OF KIT 61230131
OIL PRESS. SWITCH
WATER TEMP SWITCH
AIR TANK
FORWARD MTD
HEATED DRAINS
LOW WATER (DASH)
KYSOR COOLANT ALARM MODULE
REAR BOX
COOLANT LEVEL PROBE
Thomas BUILT BUSES
62202251 B
MAIN DOUGLAS COLUMN /FOX TURN SIGNAL 98 CAT 3126 ENGINE
End Date: 02/23/98

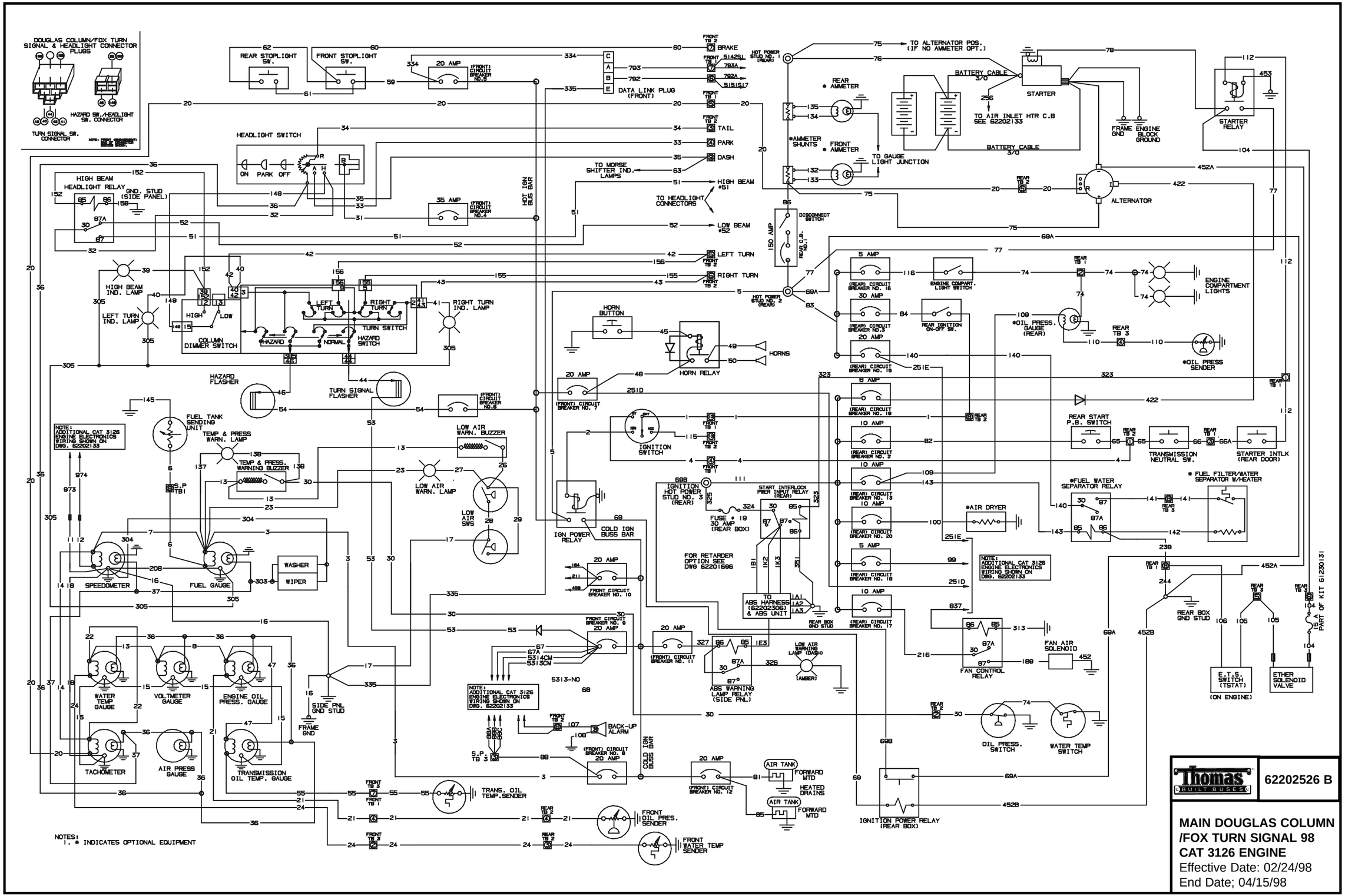

Thomas BUILT BUSES

62202526 B

MAIN DOUGLAS COLUMN /FOX TURN SIGNAL 98 CAT 3126 ENGINE

Effective Date: 02/24/98

End Date; 04/15/98

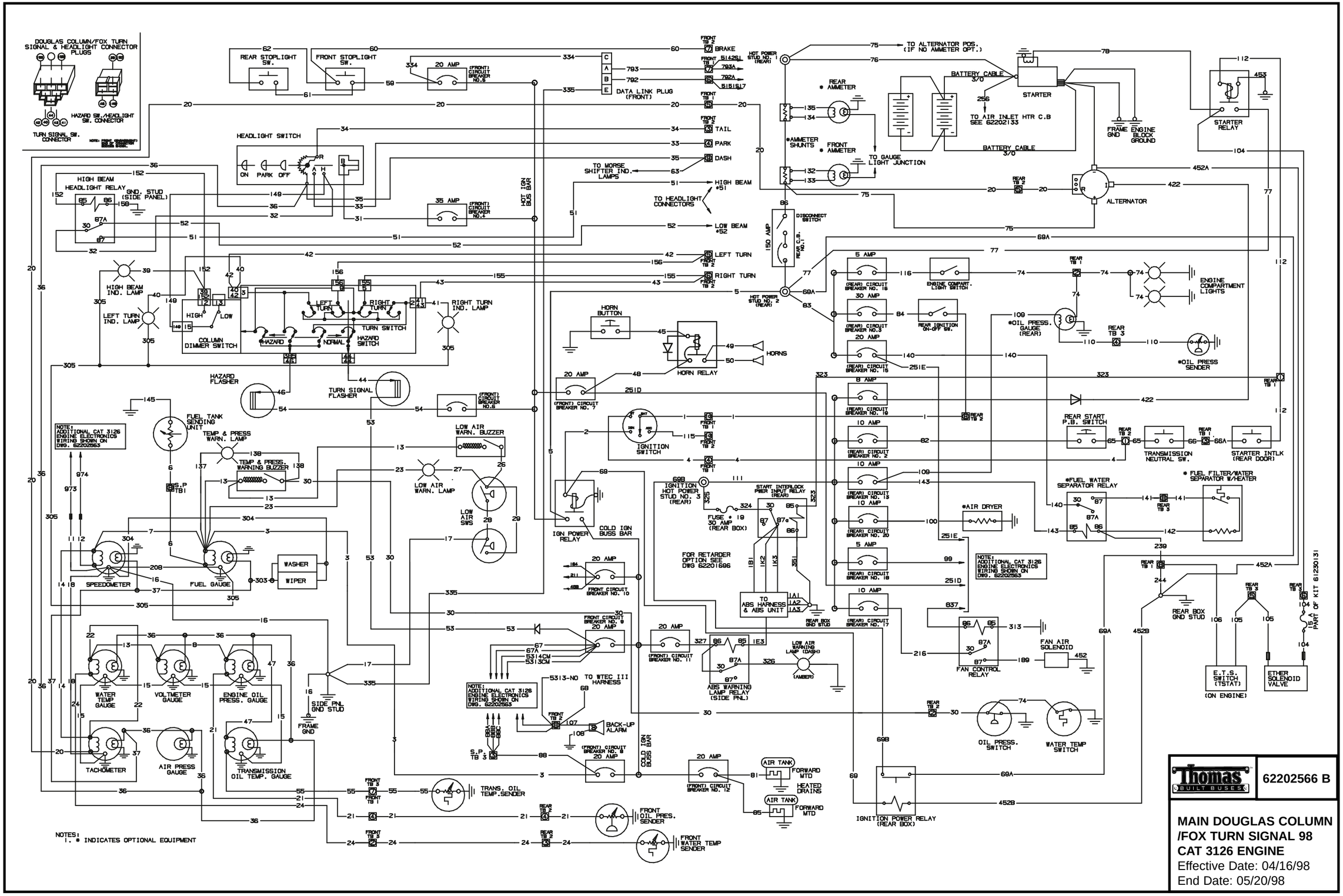

Thomas BUILT BUSES

62202566 B

MAIN DOUGLAS COLUMN /FOX TURN SIGNAL 98 CAT 3126 ENGINE

Effective Date: 04/16/98

End Date: 05/20/98

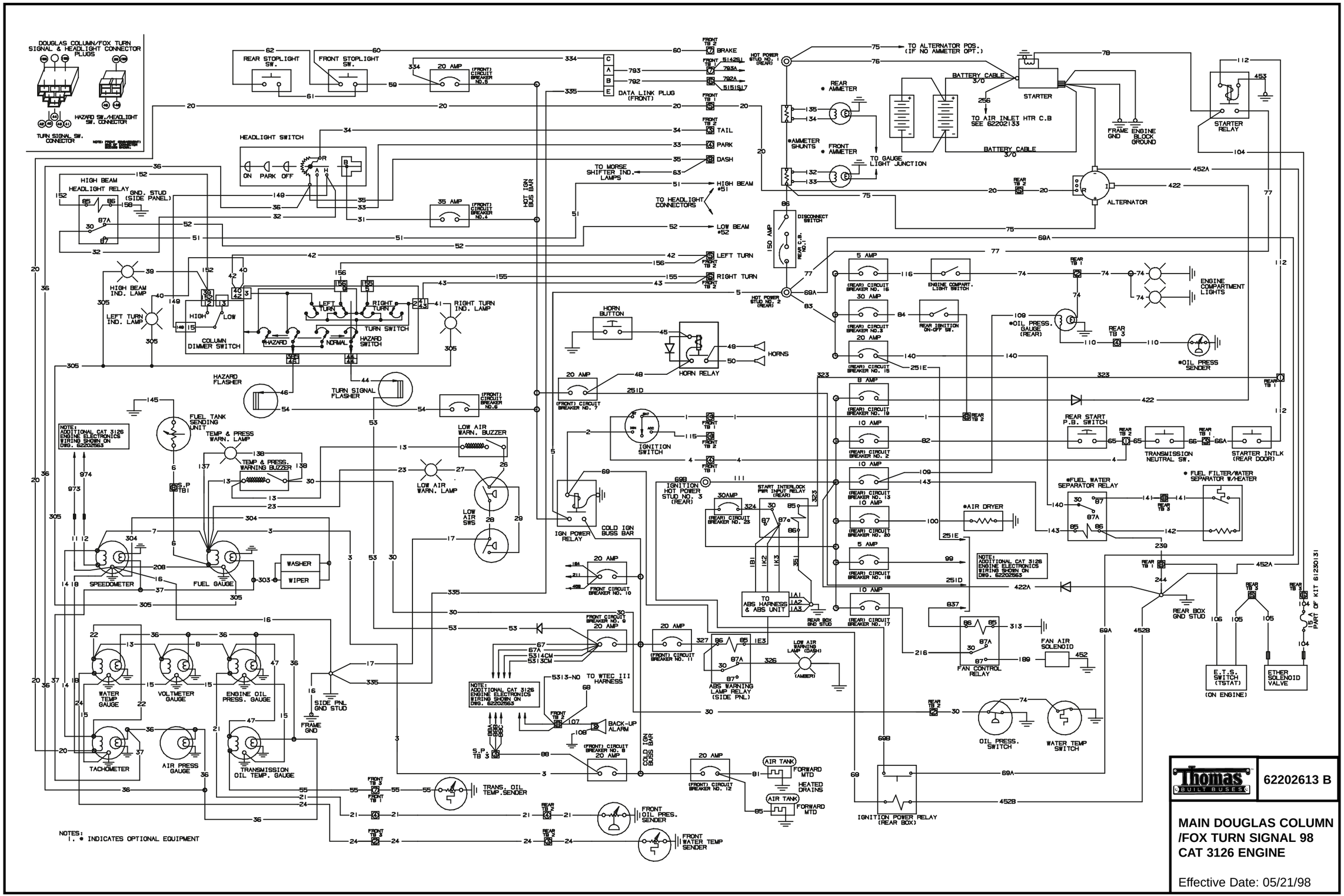
DOUGLAS COLUMN/FOX TURN SIGNAL & HEADLIGHT CONNECTOR PLUGS
HAZARD SW./HEADLIGHT SW. CONNECTOR
TURN SIGNAL SW. CONNECTOR
REAR STOPLIGHT SW.
FRONT STOPLIGHT SW.
20 AMP
(FRONT) CIRCUIT BREAKER NO.8
DATA LINK PLUG (FRONT)
BRAKE
TAIL
PARK
DASH
HIGH BEAM
LEFT TURN
RIGHT TURN
HEADLIGHT SWITCH
ON PARK OFF
HIGH BEAM HEADLIGHT RELAY
GND. STUD (SIDE PANEL)
35 AMP
(FRONT) CIRCUIT BREAKER NO.4
HOT IGN BUS BAR
TO MORSE SHIFTER IND. LAMPS
TO HEADLIGHT CONNECTORS
LOW BEAM
HIGH BEAM IND. LAMP
LEFT TURN IND. LAMP
RIGHT TURN IND. LAMP
COLUMN DIMMER SWITCH
HIGH
LOW
HAZARD
NORMAL
TURN SWITCH
HAZARD SWITCH
HAZARD FLASHER
TURN SIGNAL FLASHER
(FRONT) CIRCUIT BREAKER NO.6
FUEL TANK SENDING UNIT
TEMP & PRESS WARN. LAMP
TEMP & PRESS. WARNING BUZZER
LOW AIR WARN. BUZZER
LOW AIR WARN. LAMP
LOW AIR SWS
S.P TB1
NOTE: ADDITIONAL CAT 3126 ENGINE ELECTRONICS WIRING SHOWN ON DWG. 62202563
SPEEDOMETER
FUEL GAUGE
WASHER
WIPER
WATER TEMP GAUGE
VOLTMETER GAUGE
ENGINE OIL PRESS. GAUGE
TACHOMETER
AIR PRESS GAUGE
TRANSMISSION OIL TEMP. GAUGE
SIDE PNL GND STUD
FRAME GND
HORN BUTTON
HORN RELAY
HORNS
20 AMP
(FRONT) CIRCUIT BREAKER NO. 7
IGNITION SWITCH
IGN POWER RELAY
COLD IGN BUSS BAR
FRONT CIRCUIT BREAKER NO. 10
FRONT CIRCUIT BREAKER NO. 9
FRONT CIRCUIT BREAKER NO. 11
FRONT CIRCUIT BREAKER NO. 12
FRONT CIRCUIT BREAKER NO. 8
NOTE: ADDITIONAL CAT 3126 ENGINE ELECTRONICS WIRING SHOWN ON DWG. 62202563
TO WTEC III HARNESS
BACK-UP ALARM
S.P. TB 3
TRANS. OIL TEMP.SENDER
FRONT OIL PRES. SENDER
FRONT WATER TEMP SENDER
IGNITION HOT POWER STUD NO. 3 (REAR)
30AMP
(REAR) CIRCUIT BREAKER NO. 23
START INTERLOCK PWR INPUT RELAY (REAR)
TO ABS HARNESS & ABS UNIT
REAR BOX GND STUD
ABS WARNING LAMP RELAY (SIDE PNL)
LOW AIR WARNING LAMP (DASH)
(AMBER)
AIR TANK
FORWARD MTD
HEATED DRAINS
IGNITION POWER RELAY (REAR BOX)
TO ALTERNATOR POS. (IF NO AMMETER OPT.)
REAR AMMETER
FRONT AMMETER
AMMETER SHUNTS
TO GAUGE LIGHT JUNCTION
BATTERY CABLE 3/0
STARTER
TO AIR INLET HTR C.B SEE 62202133
FRAME GND
ENGINE BLOCK GROUND
STARTER RELAY
ALTERNATOR
DISCONNECT SWITCH
150 AMP
REAR C.B. NO.1
HOT POWER STUD NO. 1 (REAR)
HOT POWER STUD NO. 2 (REAR)
5 AMP
(REAR) CIRCUIT BREAKER NO. 16
30 AMP
(REAR) CIRCUIT BREAKER NO.3
(REAR) CIRCUIT BREAKER NO. 15
8 AMP
(REAR) CIRCUIT BREAKER NO. 19
10 AMP
(REAR) CIRCUIT BREAKER NO. 2
(REAR) CIRCUIT BREAKER NO. 13
(REAR) CIRCUIT BREAKER NO. 20
(REAR) CIRCUIT BREAKER NO. 18
(REAR) CIRCUIT BREAKER NO. 17
ENGINE COMPART. LIGHT SWITCH
REAR IGNITION ON-OFF SW.
ENGINE COMPARTMENT LIGHTS
*OIL PRESS. GAUGE (REAR)
*OIL PRESS SENDER
REAR START P.B. SWITCH
TRANSMISSION NEUTRAL SW.
STARTER INTLK (REAR DOOR)
*FUEL WATER SEPARATOR RELAY
* FUEL FILTER/WATER SEPARATOR W/HEATER
*AIR DRYER
FAN CONTROL RELAY
FAN AIR SOLENOID
OIL PRESS. SWITCH
WATER TEMP SWITCH
REAR BOX GND STUD
E.T.S. SWITCH (TSTAT)
(ON ENGINE)
ETHER SOLENOID VALVE
15 A
PART OF KIT 61230131
NOTES:
1. * INDICATES OPTIONAL EQUIPMENT
Thomas BUILT BUSES
62202613 B
MAIN DOUGLAS COLUMN /FOX TURN SIGNAL 98 CAT 3126 ENGINE
Effective Date: 05/21/98

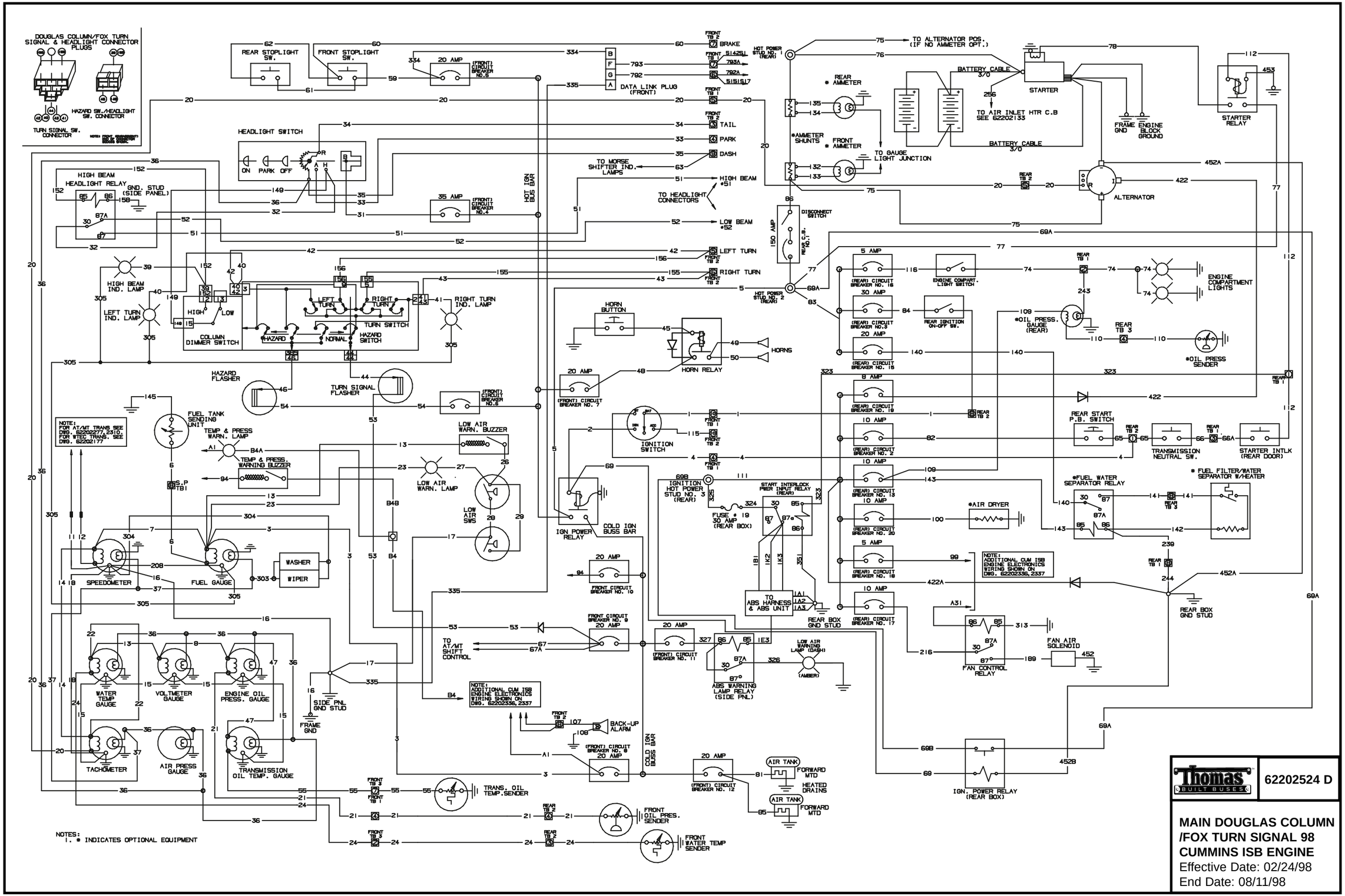

Thomas BUILT BUSES

62202524 D

MAIN DOUGLAS COLUMN /FOX TURN SIGNAL 98 CUMMINS ISB ENGINE

Effective Date: 02/24/98

End Date: 08/11/98

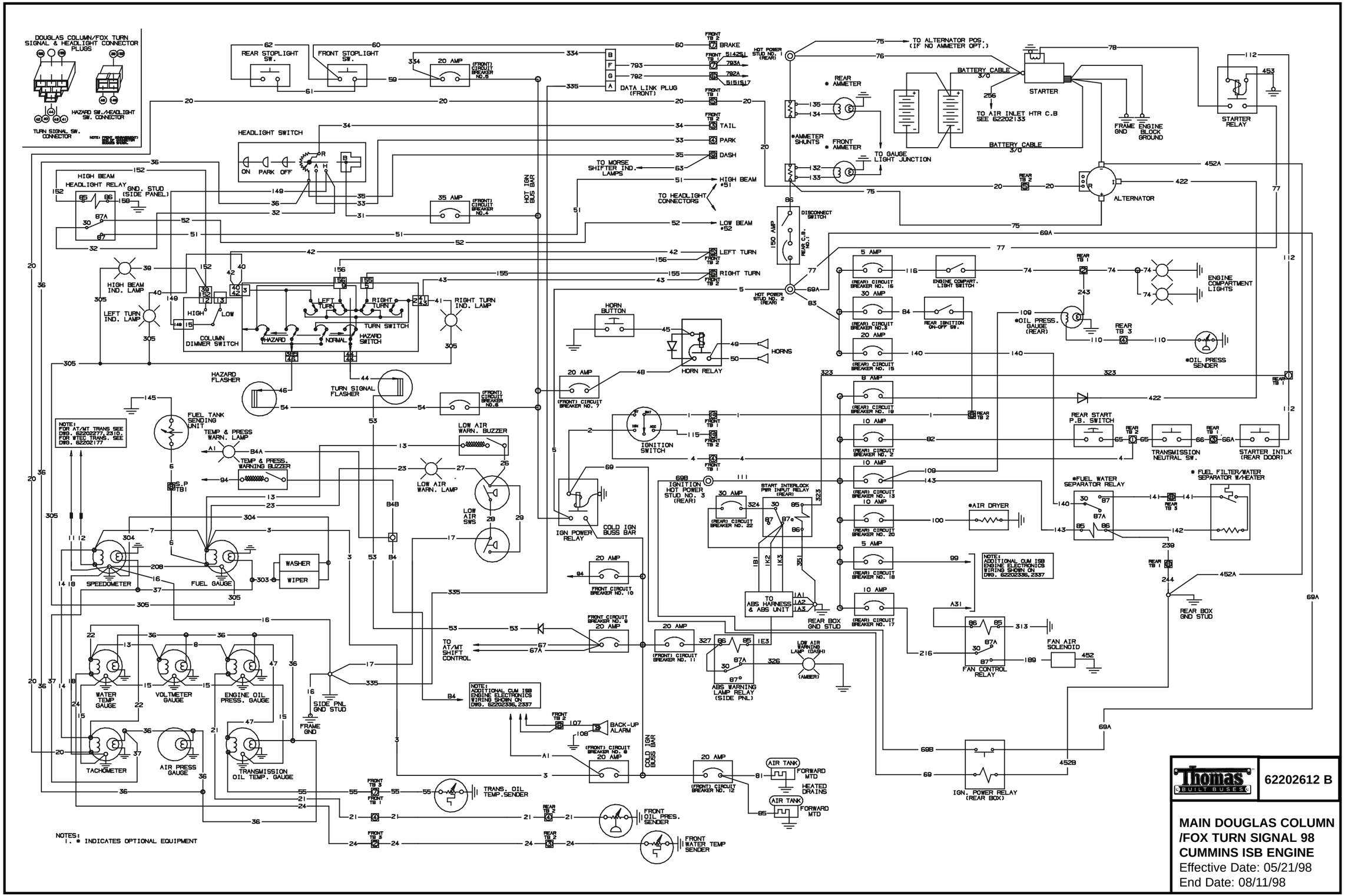
DOUGLAS COLUMN/FOX TURN SIGNAL & HEADLIGHT CONNECTOR PLUGS
HAZARD SW./HEADLIGHT SW. CONNECTOR
TURN SIGNAL SW. CONNECTOR
REAR STOPLIGHT SW.
FRONT STOPLIGHT SW.
20 AMP
(FRONT) CIRCUIT BREAKER NO.5
DATA LINK PLUG (FRONT)
BRAKE
TAIL
PARK
DASH
HIGH BEAM
LEFT TURN
RIGHT TURN
HOT POWER STUD NO. 1 (REAR)
TO ALTERNATOR POS. (IF NO AMMETER OPT.)
BATTERY CABLE 3/0
STARTER
TO AIR INLET HTR C.B SEE 62202133
FRAME GND
ENGINE BLOCK GROUND
STARTER RELAY
REAR AMMETER
AMMETER SHUNTS
FRONT AMMETER
TO GAUGE LIGHT JUNCTION
ALTERNATOR
HEADLIGHT SWITCH
ON PARK OFF
HIGH BEAM HEADLIGHT RELAY
GND. STUD (SIDE PANEL)
35 AMP
(FRONT) CIRCUIT BREAKER NO.4
HOT IGN BUS BAR
TO MORSE SHIFTER IND. LAMPS
TO HEADLIGHT CONNECTORS
LOW BEAM
DISCONNECT SWITCH
150 AMP
REAR C.B. NO.1
HOT POWER STUD NO. 2 (REAR)
HIGH BEAM IND. LAMP
LEFT TURN IND. LAMP
RIGHT TURN IND. LAMP
COLUMN DIMMER SWITCH
HIGH
LOW
HAZARD
NORMAL
TURN SWITCH
HAZARD SWITCH
HAZARD FLASHER
TURN SIGNAL FLASHER
HORN BUTTON
HORN RELAY
HORNS
5 AMP
(REAR) CIRCUIT BREAKER NO. 16
ENGINE COMPART. LIGHT SWITCH
ENGINE COMPARTMENT LIGHTS
30 AMP
(REAR) CIRCUIT BREAKER NO.3
REAR IGNITION ON-OFF SW.
*OIL PRESS. GAUGE (REAR)
*OIL PRESS SENDER
20 AMP
(REAR) CIRCUIT BREAKER NO. 15
8 AMP
(REAR) CIRCUIT BREAKER NO. 19
10 AMP
(REAR) CIRCUIT BREAKER NO. 2
(REAR) CIRCUIT BREAKER NO. 13
(REAR) CIRCUIT BREAKER NO. 20
(REAR) CIRCUIT BREAKER NO. 18
(REAR) CIRCUIT BREAKER NO. 17
REAR START P.B. SWITCH
TRANSMISSION NEUTRAL SW.
STARTER INTLK (REAR DOOR)
*FUEL WATER SEPARATOR RELAY
* FUEL FILTER/WATER SEPARATOR W/HEATER
*AIR DRYER
NOTE: ADDITIONAL CUM ISB ENGINE ELECTRONICS WIRING SHOWN ON DWG. 62202336, 2337
REAR BOX GND STUD
FAN AIR SOLENOID
FAN CONTROL RELAY
IGN. POWER RELAY (REAR BOX)
NOTE: FOR AT/MT TRANS SEE DWG. 62202277, 2310. FOR WTEC TRANS. SEE DWG. 62202177
FUEL TANK SENDING UNIT
TEMP & PRESS WARN. LAMP
TEMP & PRESS. WARNING BUZZER
LOW AIR WARN. BUZZER
LOW AIR WARN. LAMP
LOW AIR SWS
IGNITION SWITCH
IGN POWER RELAY
COLD IGN BUSS BAR
IGNITION HOT POWER STUD NO. 3 (REAR)
START INTERLOCK PWR INPUT RELAY (REAR)
(REAR) CIRCUIT BREAKER NO. 22
TO ABS HARNESS & ABS UNIT
ABS WARNING LAMP RELAY (SIDE PNL)
LOW AIR WARNING LAMP (DASH)
(AMBER)
(FRONT) CIRCUIT BREAKER NO. 7
(FRONT) CIRCUIT BREAKER NO. 10
(FRONT) CIRCUIT BREAKER NO. 9
(FRONT) CIRCUIT BREAKER NO. 11
(FRONT) CIRCUIT BREAKER NO. 8
(FRONT) CIRCUIT BREAKER NO. 12
TO AT/MT SHIFT CONTROL
BACK-UP ALARM
SIDE PNL GND STUD
FRAME GND
WASHER
WIPER
SPEEDOMETER
FUEL GAUGE
WATER TEMP GAUGE
VOLTMETER GAUGE
ENGINE OIL PRESS. GAUGE
TACHOMETER
AIR PRESS GAUGE
TRANSMISSION OIL TEMP. GAUGE
TRANS. OIL TEMP.SENDER
FRONT OIL PRES. SENDER
FRONT WATER TEMP SENDER
AIR TANK
FORWARD MTD
HEATED DRAINS
NOTES:
1. * INDICATES OPTIONAL EQUIPMENT
Thomas BUILT BUSES
62202612 B
MAIN DOUGLAS COLUMN /FOX TURN SIGNAL 98 CUMMINS ISB ENGINE
Effective Date: 05/21/98
End Date: 08/11/98

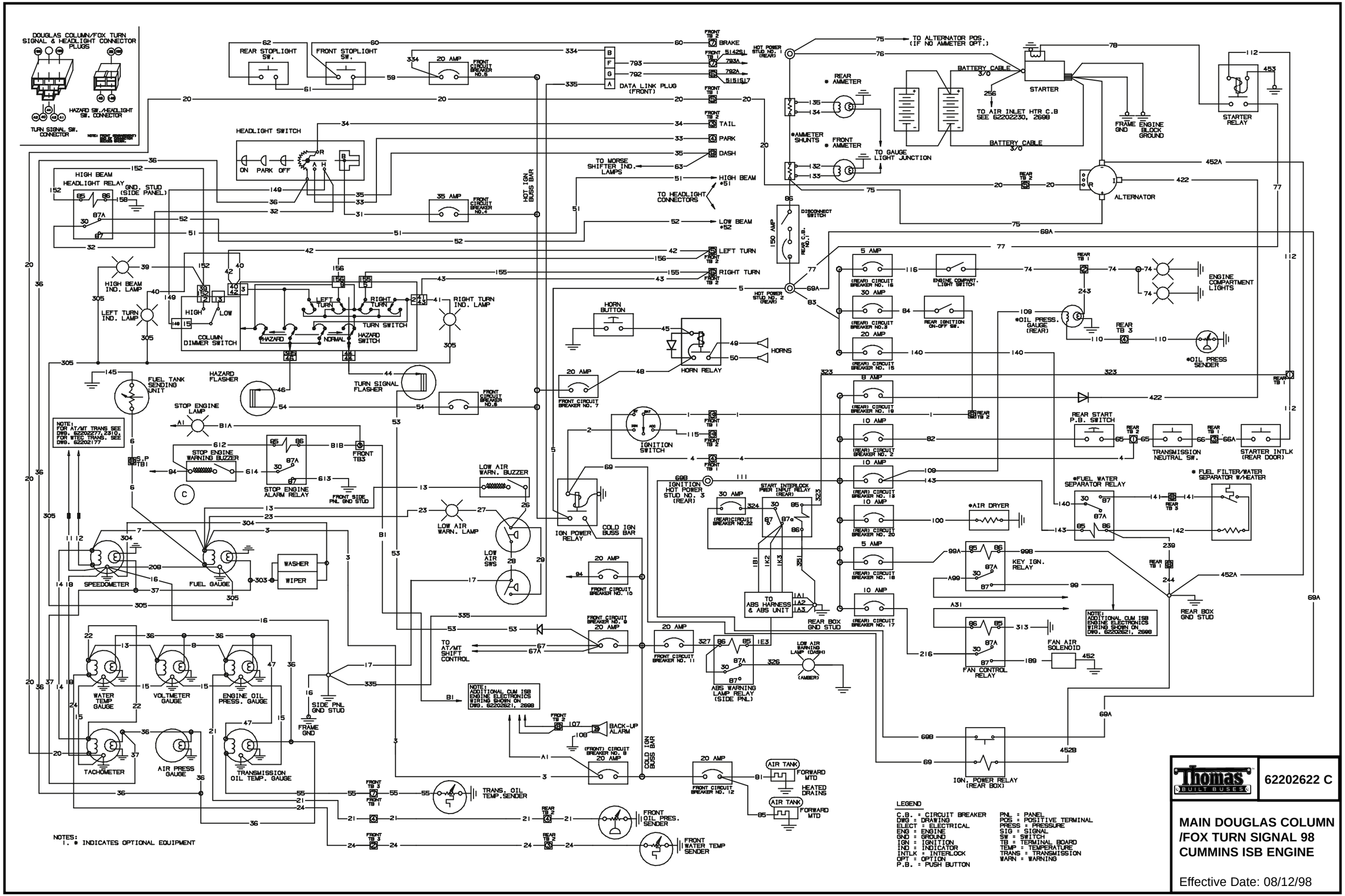
DOUGLAS COLUMN/FOX TURN SIGNAL & HEADLIGHT CONNECTOR PLUGS
TURN SIGNAL SW. CONNECTOR
HAZARD SW./HEADLIGHT SW. CONNECTOR
REAR STOPLIGHT SW.
FRONT STOPLIGHT SW.
20 AMP
FRONT CIRCUIT BREAKER NO.5
DATA LINK PLUG (FRONT)
BRAKE
TAIL
PARK
DASH
HIGH BEAM
LEFT TURN
RIGHT TURN
HORNS
HEADLIGHT SWITCH
ON PARK OFF
HIGH BEAM HEADLIGHT RELAY
GND. STUD (SIDE PANEL)
35 AMP
FRONT CIRCUIT BREAKER NO.4
HOT IGN. BUSS BAR
TO MORSE SHIFTER IND. LAMPS
TO HEADLIGHT CONNECTORS
LOW BEAM
HIGH BEAM IND. LAMP
LEFT TURN IND. LAMP
RIGHT TURN IND. LAMP
COLUMN DIMMER SWITCH
HIGH
LOW
TURN SWITCH
HAZARD
NORMAL
HAZARD SWITCH
FUEL TANK SENDING UNIT
HAZARD FLASHER
TURN SIGNAL FLASHER
FRONT CIRCUIT BREAKER NO.6
STOP ENGINE LAMP
NOTE: FOR AT/MT TRANS SEE DWG. 62202277,2310. FOR WTEC TRANS. SEE DWG. 62202177
STOP ENGINE WARNING BUZZER
STOP ENGINE ALARM RELAY
FRONT TB3
FRONT SIDE PNL GND STUD
LOW AIR WARN. BUZZER
LOW AIR WARN. LAMP
LOW AIR SWS
WASHER
WIPER
SPEEDOMETER
FUEL GAUGE
WATER TEMP GAUGE
VOLTMETER GAUGE
ENGINE OIL PRESS. GAUGE
TACHOMETER
AIR PRESS GAUGE
TRANSMISSION OIL TEMP. GAUGE
SIDE PNL GND STUD
FRAME GND
TO AT/MT SHIFT CONTROL
NOTE: ADDITIONAL CUM ISB ENGINE ELECTRONICS WIRING SHOWN ON DWG. 62202621, 2898
BACK-UP ALARM
(FRONT) CIRCUIT BREAKER NO. 8
COLD IGN BUSS BAR
TRANS. OIL TEMP.SENDER
FRONT OIL PRES. SENDER
FRONT WATER TEMP SENDER
NOTES:
1. * INDICATES OPTIONAL EQUIPMENT
HOT POWER STUD NO. 1 (REAR)
TO ALTERNATOR POS. (IF NO AMMETER OPT.)
REAR * AMMETER
*AMMETER SHUNTS
FRONT * AMMETER
TO GAUGE LIGHT JUNCTION
BATTERY CABLE 3/0
STARTER
TO AIR INLET HTR C.B SEE 62202230, 2898
FRAME GND
ENGINE BLOCK GROUND
STARTER RELAY
ALTERNATOR
DISCONNECT SWITCH
150 AMP
REAR C.B. NO.1
HOT POWER STUD NO. 2 (REAR)
5 AMP
(REAR) CIRCUIT BREAKER NO. 16
ENGINE COMPART. LIGHT SWITCH
ENGINE COMPARTMENT LIGHTS
30 AMP
(REAR) CIRCUIT BREAKER NO.3
REAR IGNITION ON-OFF SW.
*OIL PRESS. GAUGE (REAR)
*OIL PRESS SENDER
20 AMP
(REAR) CIRCUIT BREAKER NO. 15
8 AMP
(REAR) CIRCUIT BREAKER NO. 19
10 AMP
(REAR) CIRCUIT BREAKER NO. 2
REAR START P.B. SWITCH
TRANSMISSION NEUTRAL SW.
STARTER INTLK (REAR DOOR)
HORN BUTTON
HORN RELAY
FRONT CIRCUIT BREAKER NO. 7
IGNITION SWITCH
IGN POWER RELAY
COLD IGN BUSS BAR
IGNITION HOT POWER STUD NO. 3 (REAR)
START INTERLOCK PWER INPUT RELAY (REAR)
(REAR)CIRCUIT BREAKER NO.22
(REAR) CIRCUIT BREAKER NO. 13
*FUEL WATER SEPARATOR RELAY
* FUEL FILTER/WATER SEPARATOR W/HEATER
*AIR DRYER
(REAR) CIRCUIT BREAKER NO. 20
(REAR) CIRCUIT BREAKER NO. 18
KEY IGN. RELAY
TO ABS HARNESS & ABS UNIT
REAR BOX GND STUD
(REAR) CIRCUIT BREAKER NO. 17
FRONT CIRCUIT BREAKER NO. 10
FRONT CIRCUIT BREAKER NO. 9
FRONT CIRCUIT BREAKER NO. 11
LOW AIR WARNING LAMP (DASH)
(AMBER)
ABS WARNING LAMP RELAY (SIDE PNL)
FAN CONTROL RELAY
FAN AIR SOLENOID
IGN. POWER RELAY (REAR BOX)
FRONT CIRCUIT BREAKER NO. 12
AIR TANK
FORWARD MTD
HEATED DRAINS
LEGEND
C.B. = CIRCUIT BREAKER
DWG = DRAWING
ELECT = ELECTRICAL
ENG = ENGINE
GND = GROUND
IGN = IGNITION
IND = INDICATOR
INTLK = INTERLOCK
OPT = OPTION
P.B. = PUSH BUTTON
PNL = PANEL
POS = POSITIVE TERMINAL
PRESS = PRESSURE
SIG = SIGNAL
SW = SWITCH
TB = TERMINAL BOARD
TEMP = TEMPERATURE
TRANS = TRANSMISSION
WARN = WARNING
Thomas BUILT BUSES
62202622 C
MAIN DOUGLAS COLUMN /FOX TURN SIGNAL 98 CUMMINS ISB ENGINE
Effective Date: 08/12/98

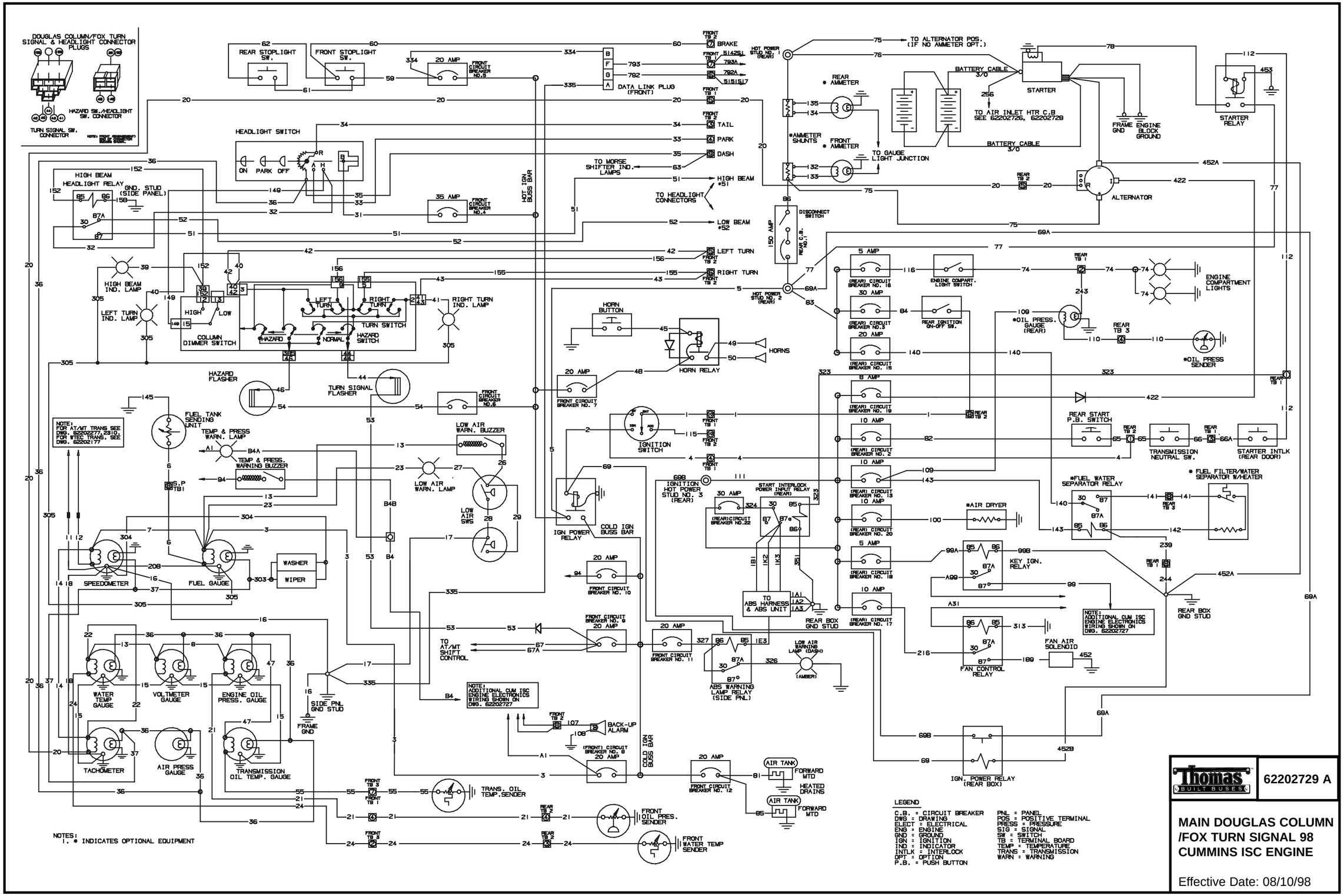
DOUGLAS COLUMN/FOX TURN SIGNAL & HEADLIGHT CONNECTOR PLUGS
TURN SIGNAL SW. CONNECTOR
HAZARD SW./HEADLIGHT SW. CONNECTOR
REAR STOPLIGHT SW.
FRONT STOPLIGHT SW.
20 AMP
FRONT CIRCUIT BREAKER NO.5
DATA LINK PLUG (FRONT)
BRAKE
TAIL
PARK
DASH
HIGH BEAM
LEFT TURN
RIGHT TURN
HOT POWER STUD NO. 1 (REAR)
HOT POWER STUD NO. 2 (REAR)
TO ALTERNATOR POS. (IF NO AMMETER OPT.)
REAR AMMETER
AMMETER SHUNTS
FRONT AMMETER
TO GAUGE LIGHT JUNCTION
BATTERY CABLE 3/0
STARTER
TO AIR INLET HTR C.B SEE 62202726, 62202728
FRAME GND
ENGINE BLOCK GROUND
STARTER RELAY
ALTERNATOR
HEADLIGHT SWITCH
ON PARK OFF
HIGH BEAM HEADLIGHT RELAY
GND. STUD (SIDE PANEL)
35 AMP
FRONT CIRCUIT BREAKER NO.4
HOT IGN. BUSS BAR
TO MORSE SHIFTER IND. LAMPS
TO HEADLIGHT CONNECTORS
LOW BEAM
DISCONNECT SWITCH
150 AMP
REAR C.B. NO.1
HIGH BEAM IND. LAMP
LEFT TURN IND. LAMP
RIGHT TURN IND. LAMP
COLUMN DIMMER SWITCH
HIGH
LOW
HAZARD
NORMAL
TURN SWITCH
HAZARD SWITCH
HAZARD FLASHER
TURN SIGNAL FLASHER
HORN BUTTON
HORN RELAY
HORNS
20 AMP
FRONT CIRCUIT BREAKER NO. 7
IGNITION SWITCH
IGN POWER RELAY
COLD IGN BUSS BAR
FUEL TANK SENDING UNIT
TEMP & PRESS WARN. LAMP
TEMP & PRESS. WARNING BUZZER
LOW AIR WARN. BUZZER
LOW AIR WARN. LAMP
LOW AIR SWS
NOTE: FOR AT/MT TRANS SEE DWG. 62202277,2310. FOR WTEC TRANS. SEE DWG. 62202177
WASHER
WIPER
SPEEDOMETER
FUEL GAUGE
WATER TEMP GAUGE
VOLTMETER GAUGE
ENGINE OIL PRESS. GAUGE
TACHOMETER
AIR PRESS GAUGE
TRANSMISSION OIL TEMP. GAUGE
SIDE PNL GND STUD
FRAME GND
TO AT/MT SHIFT CONTROL
NOTE: ADDITIONAL CUM ISC ENGINE ELECTRONICS WIRING SHOWN ON DWG. 62202727
BACK-UP ALARM
(FRONT) CIRCUIT BREAKER NO. 8 20 AMP
TRANS. OIL TEMP.SENDER
FRONT OIL PRES. SENDER
FRONT WATER TEMP SENDER
NOTES:
1. * INDICATES OPTIONAL EQUIPMENT
5 AMP
(REAR) CIRCUIT BREAKER NO. 16
ENGINE COMPART. LIGHT SWITCH
ENGINE COMPARTMENT LIGHTS
30 AMP
(REAR) CIRCUIT BREAKER NO.3
REAR IGNITION ON-OFF SW.
*OIL PRESS. GAUGE (REAR)
*OIL PRESS SENDER
20 AMP
(REAR) CIRCUIT BREAKER NO. 15
8 AMP
(REAR) CIRCUIT BREAKER NO. 19
10 AMP
(REAR) CIRCUIT BREAKER NO. 2
REAR START P.B. SWITCH
TRANSMISSION NEUTRAL SW.
STARTER INTLK (REAR DOOR)
(REAR) CIRCUIT BREAKER NO. 13
*FUEL WATER SEPARATOR RELAY
* FUEL FILTER/WATER SEPARATOR W/HEATER
*AIR DRYER
(REAR) CIRCUIT BREAKER NO. 20
KEY IGN. RELAY
(REAR) CIRCUIT BREAKER NO. 18
(REAR) CIRCUIT BREAKER NO. 17
REAR BOX GND STUD
IGN. POWER RELAY (REAR BOX)
FAN CONTROL RELAY
FAN AIR SOLENOID
IGNITION HOT POWER STUD NO. 3 (REAR)
(REAR)CIRCUIT BREAKER NO.22
START INTERLOCK POWER INPUT RELAY (REAR)
TO ABS HARNESS & ABS UNIT
ABS WARNING LAMP RELAY (SIDE PNL)
LOW AIR WARNING LAMP (DASH)
(AMBER)
FRONT CIRCUIT BREAKER NO. 10
FRONT CIRCUIT BREAKER NO. 9 20 AMP
FRONT CIRCUIT BREAKER NO. 11
FRONT CIRCUIT BREAKER NO. 12
AIR TANK
FORWARD MTD
HEATED DRAINS
LEGEND
C.B. = CIRCUIT BREAKER
DWG = DRAWING
ELECT = ELECTRICAL
ENG = ENGINE
GND = GROUND
IGN = IGNITION
IND = INDICATOR
INTLK = INTERLOCK
OPT = OPTION
P.B. = PUSH BUTTON
PNL = PANEL
POS = POSITIVE TERMINAL
PRESS = PRESSURE
SIG = SIGNAL
SW = SWITCH
TB = TERMINAL BOARD
TEMP = TEMPERATURE
TRANS = TRANSMISSION
WARN = WARNING
Thomas BUILT BUSES
62202729 A
MAIN DOUGLAS COLUMN /FOX TURN SIGNAL 98 CUMMINS ISC ENGINE
Effective Date: 08/10/98

MVP-ER
ENGINE
SCHEMATICS

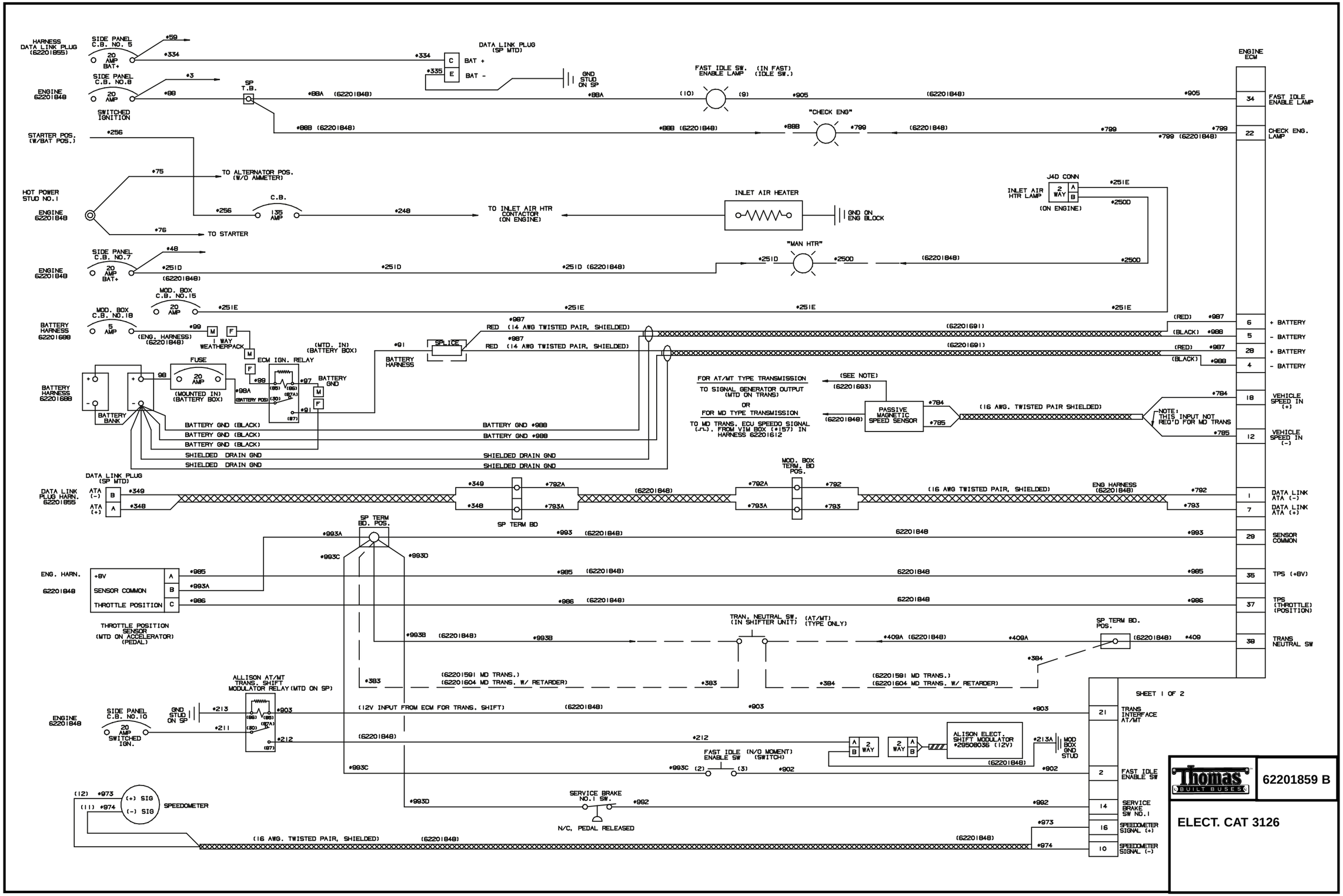
HARNESS DATA LINK PLUG (62201855)
SIDE PANEL C.B. NO. 5
20 AMP BAT+
ENGINE 62201848
SIDE PANEL C.B. NO.8
20 AMP
SWITCHED IGNITION
SP T.B.
DATA LINK PLUG (SP MTD)
BAT +
BAT -
GND STUD ON SP
FAST IDLE SW. ENABLE LAMP
(IN FAST) (IDLE SW.)
"CHECK ENG"
ENGINE ECM
FAST IDLE ENABLE LAMP
CHECK ENG. LAMP
STARTER POS. (W/BAT POS.)
TO ALTERNATOR POS. (W/O AMMETER)
HOT POWER STUD NO.1
C.B.
135 AMP
TO INLET AIR HTR CONTACTOR (ON ENGINE)
INLET AIR HEATER
GND ON ENG BLOCK
J4D CONN
2 WAY
INLET AIR HTR LAMP
(ON ENGINE)
TO STARTER
SIDE PANEL C.B. NO.7
"MAN HTR"
MOD. BOX C.B. NO.15
MOD. BOX C.B. NO.18
5 AMP
BATTERY HARNESS 62201688
(ENG. HARNESS) (62201848)
1 WAY WEATHERPACK
(MTD. IN) (BATTERY BOX)
SPLICE
RED (14 AWG TWISTED PAIR, SHIELDED)
+ BATTERY
- BATTERY
FUSE
20 AMP
(MOUNTED IN) (BATTERY BOX)
ECM IGN. RELAY
BATTERY GND
BATTERY HARNESS 62201688
BATTERY BANK
BATTERY GND (BLACK)
SHIELDED DRAIN GND
FOR AT/MT TYPE TRANSMISSION
TO SIGNAL GENERATOR OUTPUT (MTD ON TRANS)
OR
FOR MD TYPE TRANSMISSION
TO MD TRANS. ECU SPEEDO SIGNAL (.ru.). FROM VIM BOX (#157) IN HARNESS 62201612
(SEE NOTE)
PASSIVE MAGNETIC SPEED SENSOR
(16 AWG. TWISTED PAIR SHIELDED)
NOTE: THIS INPUT NOT REQ'D FOR MD TRANS
VEHICLE SPEED IN (+)
VEHICLE SPEED IN (-)
DATA LINK PLUG (SP MTD)
DATA LINK PLUG HARN. 62201855
ATA (-)
ATA (+)
SP TERM BD
MOD. BOX TERM. BD POS.
ENG HARNESS (62201848)
DATA LINK ATA (-)
DATA LINK ATA (+)
SP TERM BD. POS.
SENSOR COMMON
ENG. HARN. 62201848
+8V
SENSOR COMMON
THROTTLE POSITION
TPS (+8V)
TPS (THROTTLE) (POSITION)
THROTTLE POSITION SENSOR (MTD ON ACCELERATOR) (PEDAL)
TRAN. NEUTRAL SW. (IN SHIFTER UNIT)
(AT/MT) (TYPE ONLY)
TRANS NEUTRAL SW
ALLISON AT/MT TRANS. SHIFT MODULATOR RELAY (MTD ON SP)
(62201591 MD TRANS.)
(62201604 MD TRANS. W/ RETARDER)
SHEET 1 OF 2
ENGINE 62201848
SIDE PANEL C.B. NO.10
20 AMP SWITCHED IGN.
GND STUD ON SP
(12V INPUT FROM ECM FOR TRANS. SHIFT)
TRANS INTERFACE AT/MT
ALISON ELECT. SHIFT MODULATOR #29508036 (12V)
MOD BOX GND STUD
FAST IDLE ENABLE SW
(N/O MOMENT) (SWITCH)
FAST IDLE ENABLE SW
SERVICE BRAKE NO.1 SW.
N/C, PEDAL RELEASED
SERVICE BRAKE SW NO.1
SPEEDOMETER
(+) SIG
(-) SIG
SPEEDOMETER SIGNAL (+)
SPEEDOMETER SIGNAL (-)
(16 AWG. TWISTED PAIR, SHIELDED)
Thomas BUILT BUSES
62201859 B
ELECT. CAT 3126

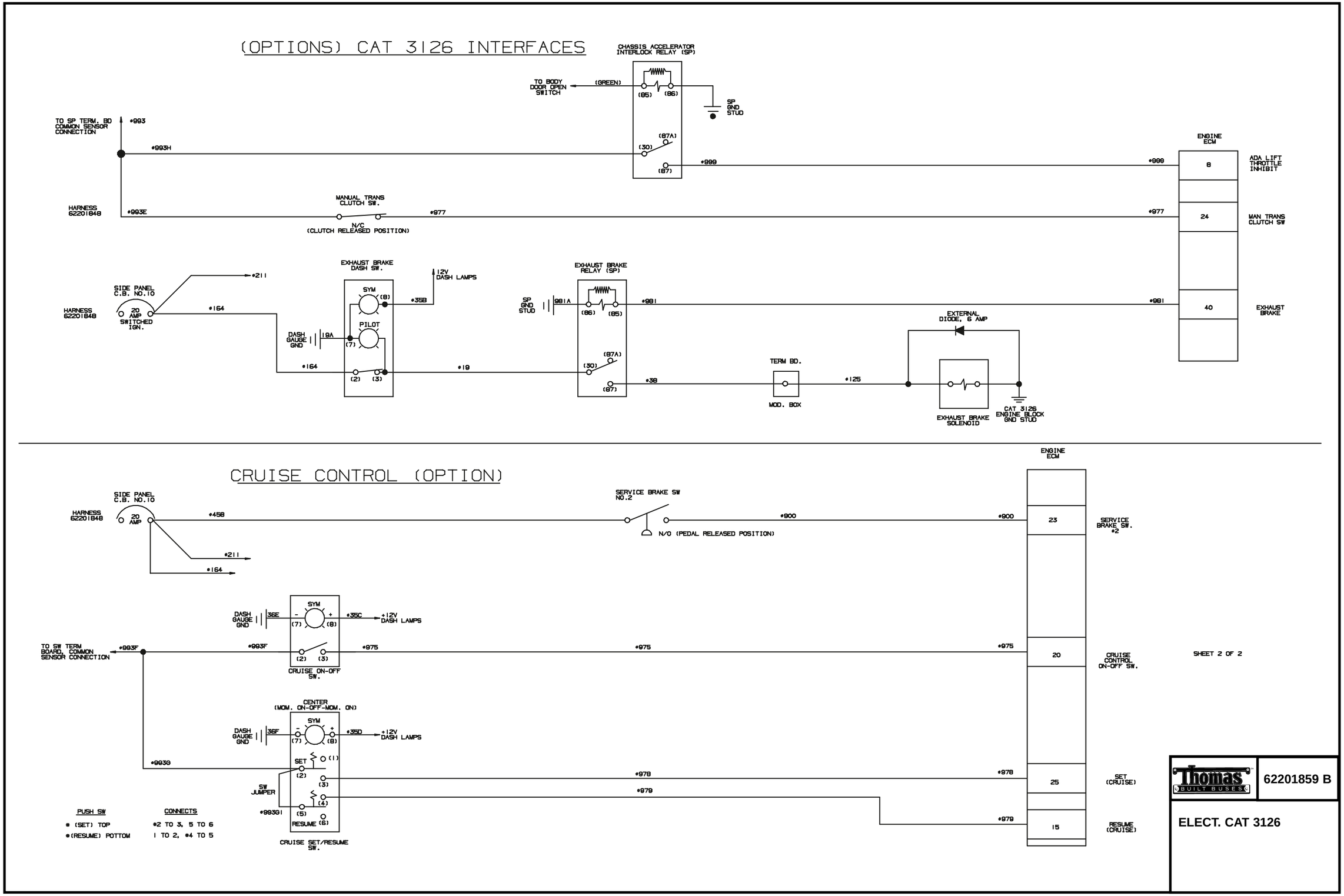
(OPTIONS) CAT 3126 INTERFACES
CHASSIS ACCELERATOR INTERLOCK RELAY (SP)
TO BODY DOOR OPEN SWITCH
(GREEN)
(85)
(86)
SP GND STUD
(87A)
(30)
(87)
TO SP TERM. BD COMMON SENSOR CONNECTION
•993
•993H
•999
ENGINE ECM
•999
8
ADA LIFT THROTTLE INHIBIT
HARNESS 62201848
•993E
MANUAL TRANS CLUTCH SW.
N/C (CLUTCH RELEASED POSITION)
•977
•977
24
MAN TRANS CLUTCH SW
EXHAUST BRAKE DASH SW.
12V DASH LAMPS
SIDE PANEL C.B. NO.10
•211
HARNESS 62201848
20 AMP SWITCHED IGN.
•164
SYM
(8)
•35B
PILOT
DASH GAUGE GND
19A
(7)
•164
(2)
(3)
•19
EXHAUST BRAKE RELAY (SP)
SP GND STUD
981A
(86)
(85)
•981
•981
40
EXHAUST BRAKE
(87A)
(30)
(87)
•38
TERM BD.
MOD. BOX
•125
EXTERNAL DIODE, 6 AMP
EXHAUST BRAKE SOLENOID
CAT 3126 ENGINE BLOCK GND STUD
CRUISE CONTROL (OPTION)
ENGINE ECM
SIDE PANEL C.B. NO.10
HARNESS 62201848
20 AMP
•458
SERVICE BRAKE SW NO.2
N/O (PEDAL RELEASED POSITION)
•900
•900
23
SERVICE BRAKE SW. #2
•211
•164
DASH GAUGE GND
36E
SYM
•35C
12V DASH LAMPS
(7)
(8)
TO SW TERM BOARD, COMMON SENSOR CONNECTION
•993F
•993F
(2)
(3)
•975
•975
•975
20
CRUISE CONTROL ON-OFF SW.
CRUISE ON-OFF SW.
SHEET 2 OF 2
CENTER (MOM. ON-OFF-MOM. ON)
DASH GAUGE GND
36F
SYM
•35D
12V DASH LAMPS
(7)
(8)
•993G
SET
(1)
(2)
(3)
•978
•978
25
SET (CRUISE)
SW JUMPER
•979
(4)
•993G1
(5)
RESUME
(6)
•979
15
RESUME (CRUISE)
CRUISE SET/RESUME SW.
PUSH SW
* (SET) TOP
*(RESUME) POTTOM
CONNECTS
•2 TO 3, 5 TO 6
1 TO 2, •4 TO 5
Thomas BUILT BUSES
62201859 B
ELECT. CAT 3126

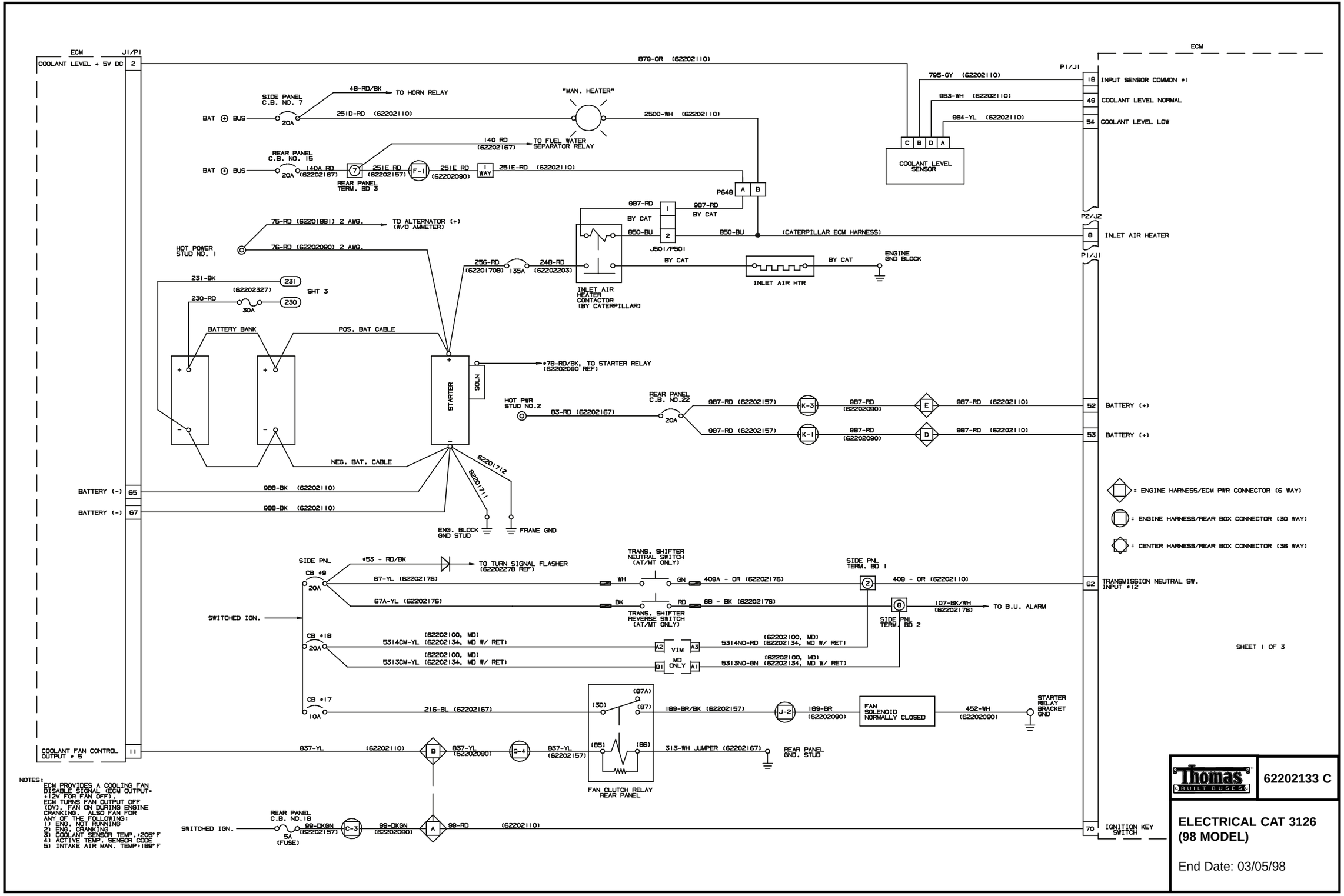
ECM
J1/P1
COOLANT LEVEL + 5V DC
2
879-OR (62202110)
ECM
P1/J1
18 INPUT SENSOR COMMON #1
49 COOLANT LEVEL NORMAL
54 COOLANT LEVEL LOW
795-GY (62202110)
983-WH (62202110)
984-YL (62202110)
COOLANT LEVEL SENSOR
SIDE PANEL C.B. NO. 7
20A
48-RD/BK
TO HORN RELAY
"MAN. HEATER"
BAT BUS
251D-RD (62202110)
250D-WH (62202110)
140 RD (62202167)
TO FUEL WATER SEPARATOR RELAY
REAR PANEL C.B. NO. 15
140A RD (62202167)
251E RD (62202157)
251E RD (62202090)
251E-RD (62202110)
REAR PANEL TERM. BD 3
P648
987-RD
BY CAT
850-BU
J501/P501
(CATERPILLAR ECM HARNESS)
P2/J2
8 INLET AIR HEATER
P1/J1
75-RD (62201881) 2 AWG.
TO ALTERNATOR (+) (W/O AMMETER)
HOT POWER STUD NO. 1
76-RD (62202090) 2 AWG.
256-RD (62201708)
135A
248-RD (62202203)
INLET AIR HEATER CONTACTOR (BY CATERPILLAR)
INLET AIR HTR
ENGINE GND BLOCK
231-BK (62202327)
SHT 3
230-RD
30A
BATTERY BANK
POS. BAT CABLE
STARTER
SOLN
#78-RD/BK, TO STARTER RELAY (62202090 REF)
HOT PWR STUD NO.2
83-RD (62202167)
REAR PANEL C.B. NO.22
20A
987-RD (62202157)
K-3
987-RD (62202090)
E
987-RD (62202110)
52 BATTERY (+)
K-1
D
53 BATTERY (+)
NEG. BAT. CABLE
62201712
62201711
BATTERY (-) 65
988-BK (62202110)
BATTERY (-) 67
ENG. BLOCK GND STUD
FRAME GND
= ENGINE HARNESS/ECM PWR CONNECTOR (6 WAY)
= ENGINE HARNESS/REAR BOX CONNECTOR (30 WAY)
= CENTER HARNESS/REAR BOX CONNECTOR (36 WAY)
SIDE PNL
CB #9
20A
#53 - RD/BK
TO TURN SIGNAL FLASHER (62202278 REF)
67-YL (62202176)
TRANS. SHIFTER NEUTRAL SWITCH (AT/MT ONLY)
WH
GN
409A - OR (62202176)
SIDE PNL TERM. BD 1
409 - OR (62202110)
62 TRANSMISSION NEUTRAL SW. INPUT #12
67A-YL (62202176)
BK
RD
68 - BK (62202176)
TRANS. SHIFTER REVERSE SWITCH (AT/MT ONLY)
107-BK/WH (62202176)
TO B.U. ALARM
SIDE PNL TERM. BD 2
SWITCHED IGN.
CB #18
20A
5314CM-YL (62202100, MD) (62202134, MD W/ RET)
VIM
MD ONLY
5314NO-RD (62202100, MD) (62202134, MD W/ RET)
5313CM-YL (62202100, MD) (62202134, MD W/ RET)
5313NO-GN (62202100, MD) (62202134, MD W/ RET)
SHEET 1 OF 3
CB #17
10A
216-BL (62202167)
(87A)
(30)
(87)
189-BR/BK (62202157)
J-2
189-BR (62202090)
FAN SOLENOID NORMALLY CLOSED
452-WH (62202090)
STARTER RELAY BRACKET GND
COOLANT FAN CONTROL OUTPUT #5
11
837-YL (62202110)
B
837-YL (62202090)
G-4
837-YL (62202157)
(85)
(86)
313-WH JUMPER (62202167)
REAR PANEL GND. STUD
FAN CLUTCH RELAY REAR PANEL
NOTES:
ECM PROVIDES A COOLING FAN DISABLE SIGNAL (ECM OUTPUT= +12V FOR FAN OFF).
ECM TURNS FAN OUTPUT OFF (0V), FAN ON DURING ENGINE CRANKING. ALSO FAN FOR ANY OF THE FOLLOWING:
1) ENG. NOT RUNNING
2) ENG. CRANKING
3) COOLANT SENSOR TEMP.>205°F
4) ACTIVE TEMP. SENSOR CODE
5) INTAKE AIR MAN. TEMP>189°F
SWITCHED IGN.
REAR PANEL C.B. NO.18
99-DKGN (62202157)
5A (FUSE)
C-3
99-DKGN (62202090)
A
99-RD (62202110)
70 IGNITION KEY SWITCH
Thomas BUILT BUSES
62202133 C
ELECTRICAL CAT 3126 (98 MODEL)
End Date: 03/05/98

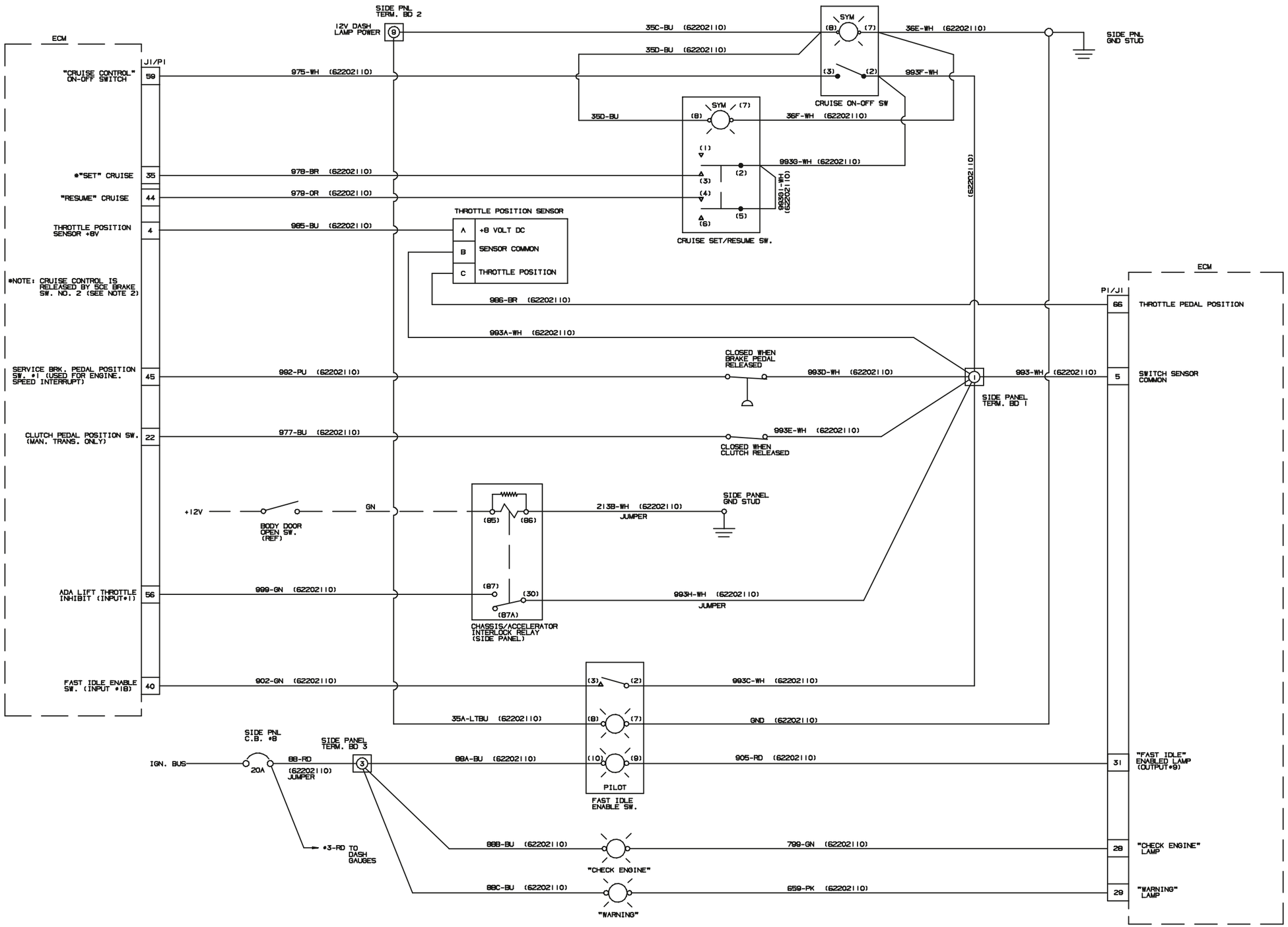

SHEET 2 OF 3

Thomas BUILT BUSES

62202133 C

ELECTRICAL CAT 3126 (98 MODEL)

End Date: 03/05/98

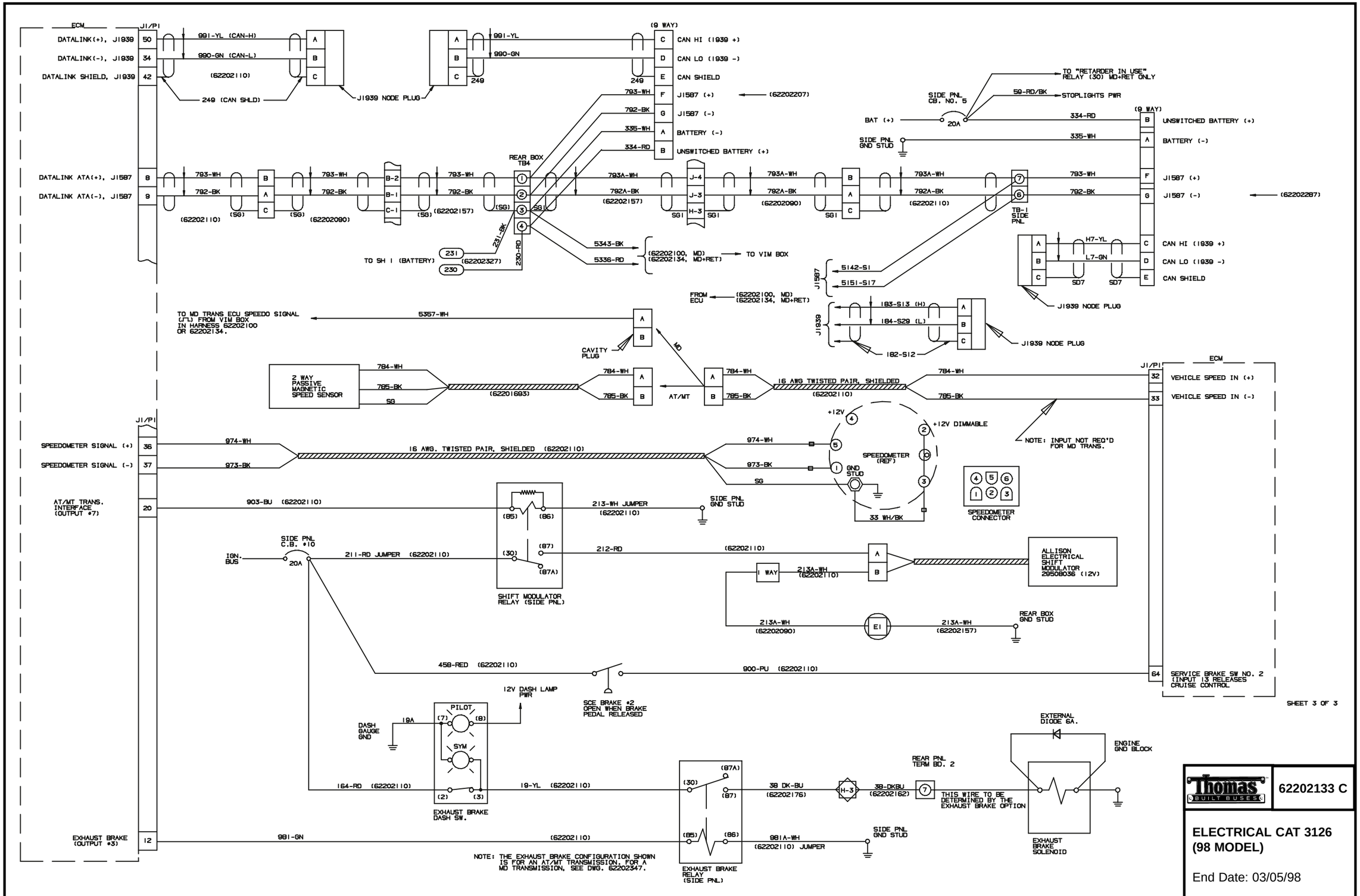
ECM
J1/P1
DATALINK(+), J1939 50
DATALINK(-), J1939 34
DATALINK SHIELD, J1939 42
991-YL (CAN-H)
990-GN (CAN-L)
(62202110)
249 (CAN SHLD)
J1939 NODE PLUG
(9 WAY)
CAN HI (1939 +)
CAN LO (1939 -)
CAN SHIELD
J1587 (+)
J1587 (-)
BATTERY (-)
UNSWITCHED BATTERY (+)
(62202207)
DATALINK ATA(+), J1587 8
DATALINK ATA(-), J1587 9
793-WH
792-BK
REAR BOX TB4
793A-WH
792A-BK
(62202157)
(62202090)
(62202110)
TO SH 1 (BATTERY)
231
230
231-BK
230-RD
5343-BK
5336-RD
(62202100, MD)
(62202134, MD+RET)
TO VIM BOX
SIDE PNL CB. NO. 5
20A
BAT (+)
SIDE PNL GND STUD
TO "RETARDER IN USE" RELAY (30) MD+RET ONLY
59-RD/BK
STOPLIGHTS PWR
334-RD
335-WH
TB-1 SIDE PNL
H7-YL
L7-GN
SD7
5142-S1
5151-S17
J1587
FROM ECU
183-S13 (H)
184-S29 (L)
182-S12
J1939
TO MD TRANS ECU SPEEDO SIGNAL (JTL) FROM VIM BOX IN HARNESS 62202100 OR 62202134.
5357-WH
CAVITY PLUG
MD
2 WAY PASSIVE MAGNETIC SPEED SENSOR
784-WH
785-BK
SG
(62201693)
AT/MT
16 AWG TWISTED PAIR, SHIELDED
(62202110)
VEHICLE SPEED IN (+)
VEHICLE SPEED IN (-)
NOTE: INPUT NOT REQ'D FOR MD TRANS.
SPEEDOMETER SIGNAL (+) 36
SPEEDOMETER SIGNAL (-) 37
974-WH
973-BK
16 AWG. TWISTED PAIR, SHIELDED (62202110)
+12V
+12V DIMMABLE
SPEEDOMETER (REF)
GND STUD
33 WH/BK
SPEEDOMETER CONNECTOR
AT/MT TRANS. INTERFACE (OUTPUT #7) 20
903-BU (62202110)
213-WH JUMPER (62202110)
SIDE PNL GND STUD
SHIFT MODULATOR RELAY (SIDE PNL)
SIDE PNL C.B. #10
IGN. BUS
211-RD JUMPER (62202110)
212-RD
1 WAY
213A-WH
ALLISON ELECTRICAL SHIFT MODULATOR 29508036 (12V)
REAR BOX GND STUD
458-RED (62202110)
900-PU (62202110)
SERVICE BRAKE SW NO. 2 (INPUT 13 RELEASES CRUISE CONTROL)
SHEET 3 OF 3
12V DASH LAMP PWR
SCE BRAKE #2 OPEN WHEN BRAKE PEDAL RELEASED
PILOT
SYM
DASH GAUGE GND
19A
164-RD (62202110)
19-YL (62202110)
EXHAUST BRAKE DASH SW.
EXTERNAL DIODE 6A.
ENGINE GND BLOCK
REAR PNL TERM BD. 2
39 DK-BU (62202176)
39-DKBU (62202162)
THIS WIRE TO BE DETERMINED BY THE EXHAUST BRAKE OPTION
EXHAUST BRAKE (OUTPUT #3) 12
981-GN
981A-WH (62202110) JUMPER
EXHAUST BRAKE SOLENOID
EXHAUST BRAKE RELAY (SIDE PNL)
NOTE: THE EXHAUST BRAKE CONFIGURATION SHOWN IS FOR AN AT/MT TRANSMISSION. FOR A MD TRANSMISSION, SEE DWG. 62202347.
Thomas BUILT BUSES
62202133 C
ELECTRICAL CAT 3126 (98 MODEL)
End Date: 03/05/98

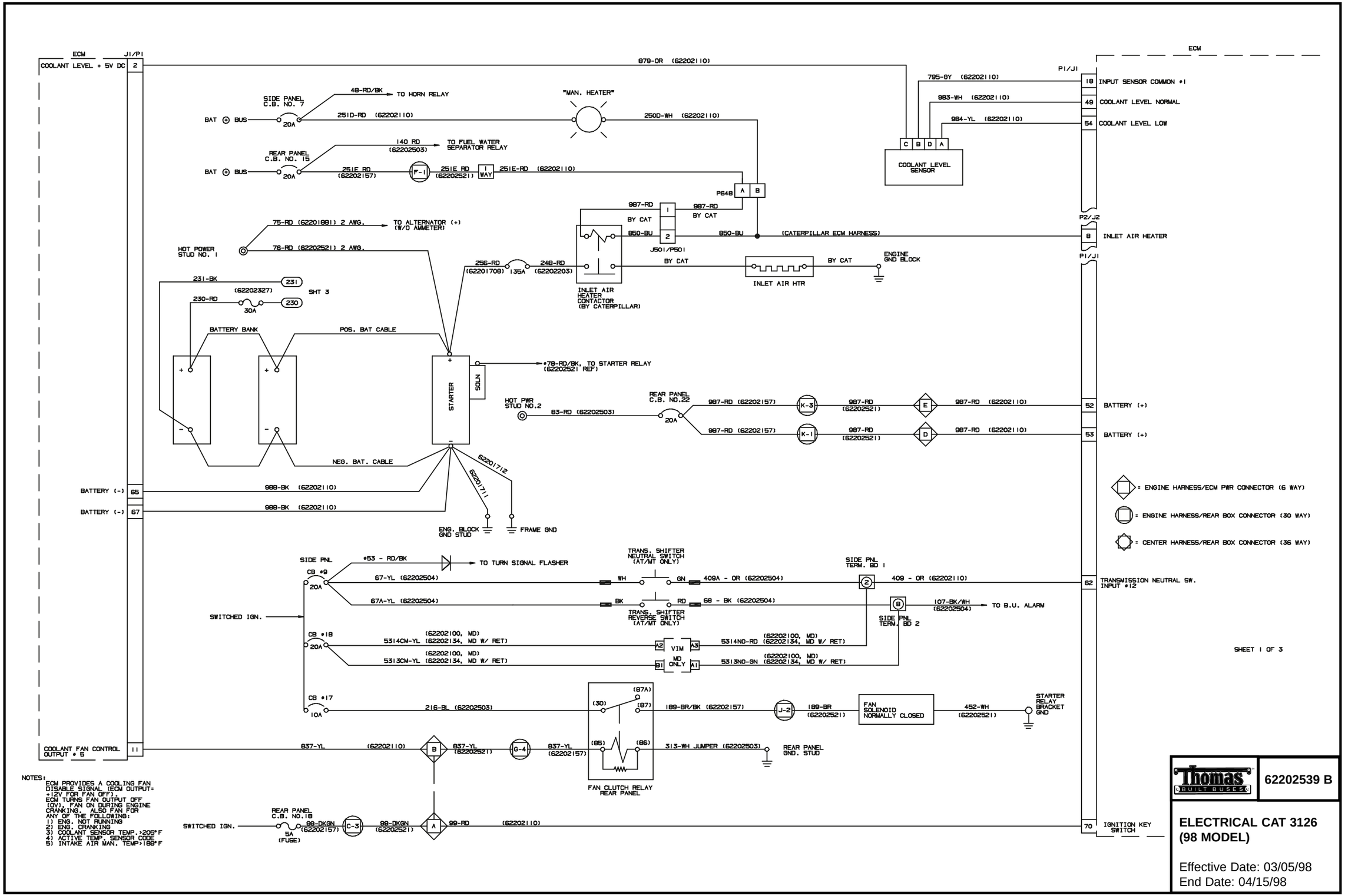
ECM
J1/P1
COOLANT LEVEL + 5V DC
2
878-OR (62202110)
ECM
P1/J1
18 INPUT SENSOR COMMON #1
49 COOLANT LEVEL NORMAL
54 COOLANT LEVEL LOW
795-GY (62202110)
983-WH (62202110)
984-YL (62202110)
COOLANT LEVEL SENSOR
SIDE PANEL C.B. NO. 7
20A
48-RD/BK
TO HORN RELAY
BAT BUS
251D-RD (62202110)
"MAN. HEATER"
250D-WH (62202110)
REAR PANEL C.B. NO. 15
140 RD (62202503)
TO FUEL WATER SEPARATOR RELAY
251E RD (62202157)
F-1
251E RD (62202521)
1 WAY
251E-RD (62202110)
P648
987-RD
BY CAT
850-BU
J501/P501
(CATERPILLAR ECM HARNESS)
P2/J2
8 INLET AIR HEATER
P1/J1
75-RD (62201881) 2 AWG.
TO ALTERNATOR (+) (W/O AMMETER)
HOT POWER STUD NO. 1
76-RD (62202521) 2 AWG.
256-RD (62201708)
135A
248-RD (62202203)
INLET AIR HEATER CONTACTOR (BY CATERPILLAR)
INLET AIR HTR
ENGINE GND BLOCK
231-BK
(622202327)
231
SHT 3
230-RD
30A
230
BATTERY BANK
POS. BAT CABLE
STARTER
SOLN
#78-RD/BK, TO STARTER RELAY (62202521 REF)
HOT PWR STUD NO.2
83-RD (62202503)
REAR PANEL C.B. NO.22
20A
987-RD (62202157)
K-3
987-RD (62202521)
E
987-RD (62202110)
52 BATTERY (+)
K-1
D
53 BATTERY (+)
NEG. BAT. CABLE
62201712
62201711
BATTERY (-) 65
988-BK (62202110)
BATTERY (-) 67
ENG. BLOCK GND STUD
FRAME GND
= ENGINE HARNESS/ECM PWR CONNECTOR (6 WAY)
= ENGINE HARNESS/REAR BOX CONNECTOR (30 WAY)
= CENTER HARNESS/REAR BOX CONNECTOR (36 WAY)
SIDE PNL
CB #9
20A
#53 - RD/BK
TO TURN SIGNAL FLASHER
67-YL (62202504)
TRANS. SHIFTER NEUTRAL SWITCH (AT/MT ONLY)
WH
GN
409A - OR (62202504)
SIDE PNL TERM. BD 1
409 - OR (62202110)
62 TRANSMISSION NEUTRAL SW. INPUT #12
67A-YL (62202504)
BK
RD
68 - BK (62202504)
107-BK/WH (62202504)
TO B.U. ALARM
SWITCHED IGN.
TRANS. SHIFTER REVERSE SWITCH (AT/MT ONLY)
SIDE PNL TERM. BD 2
CB #18
20A
(62202100, MD)
5314CM-YL (62202134, MD W/ RET)
A2
VIM
A3
5314ND-RD (62202134, MD W/ RET)
5313CM-YL (62202134, MD W/ RET)
B1
MD ONLY
A1
5313ND-GN (62202134, MD W/ RET)
SHEET 1 OF 3
CB #17
10A
216-BL (62202503)
(87A)
(30)
(87)
189-BR/BK (62202157)
J-2
189-BR (62202521)
FAN SOLENOID NORMALLY CLOSED
452-WH (62202521)
STARTER RELAY BRACKET GND
COOLANT FAN CONTROL OUTPUT #5
11
837-YL (62202110)
B
837-YL (62202521)
G-4
837-YL (62202157)
(85)
(86)
313-WH JUMPER (62202503)
REAR PANEL GND. STUD
FAN CLUTCH RELAY REAR PANEL
NOTES:
ECM PROVIDES A COOLING FAN DISABLE SIGNAL (ECM OUTPUT= +12V FOR FAN OFF).
ECM TURNS FAN OUTPUT OFF (0V), FAN ON DURING ENGINE CRANKING. ALSO FAN FOR ANY OF THE FOLLOWING:
1) ENG. NOT RUNNING
2) ENG. CRANKING
3) COOLANT SENSOR TEMP.>205°F
4) ACTIVE TEMP. SENSOR CODE
5) INTAKE AIR MAN. TEMP>186°F
SWITCHED IGN.
REAR PANEL C.B. NO.18
5A (FUSE)
99-DKGN (62202157)
C-3
99-DKGN (62202521)
A
99-RD (62202110)
70 IGNITION KEY SWITCH
Thomas BUILT BUSES
62202539 B
ELECTRICAL CAT 3126 (98 MODEL)
Effective Date: 03/05/98
End Date: 04/15/98

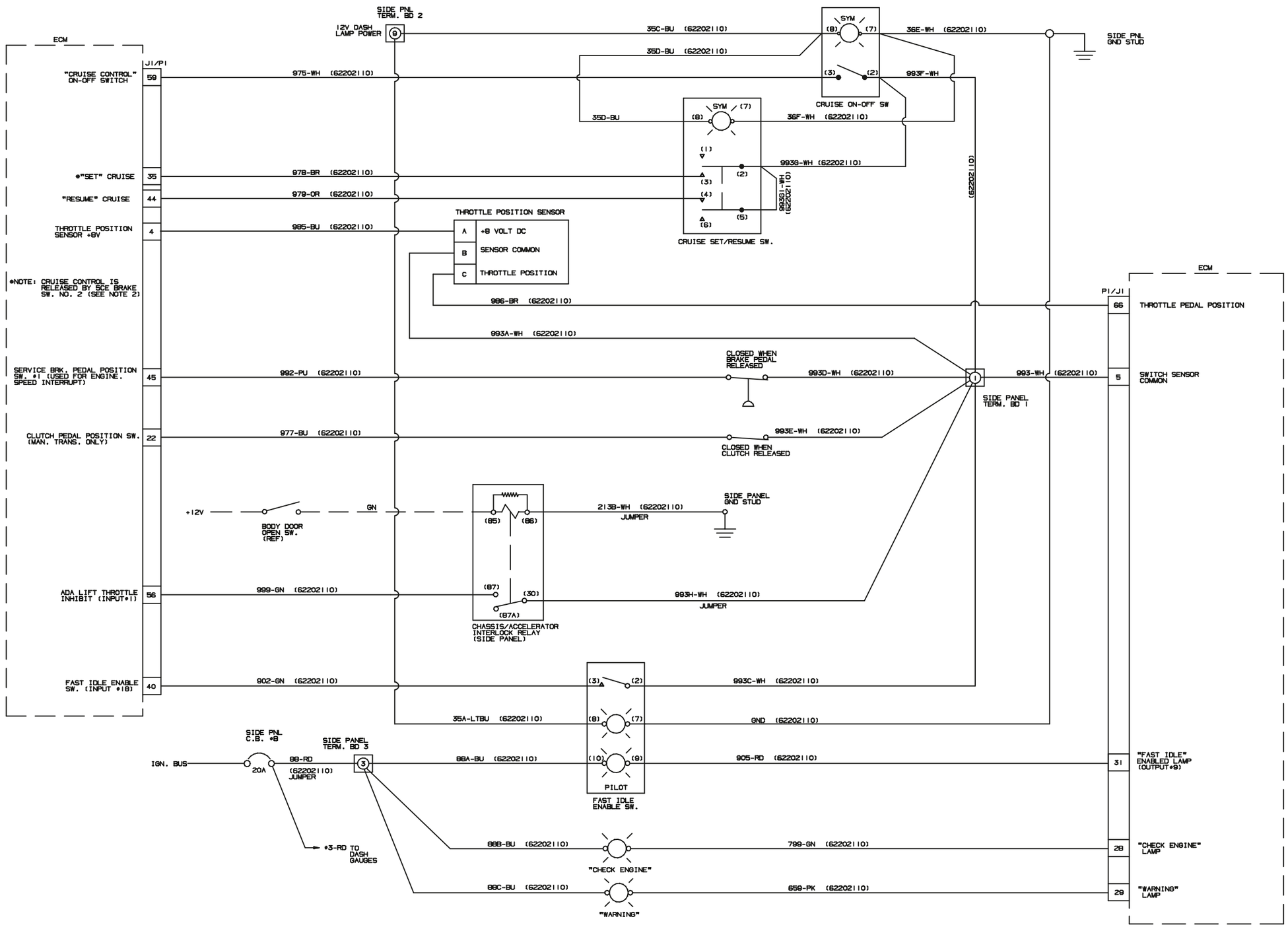

SHEET 2 OF 3

Thomas BUILT BUSES

62202539 B

ELECTRICAL CAT 3126 (98 MODEL)

Effective Date: 03/05/98
End Date: 04/15/98

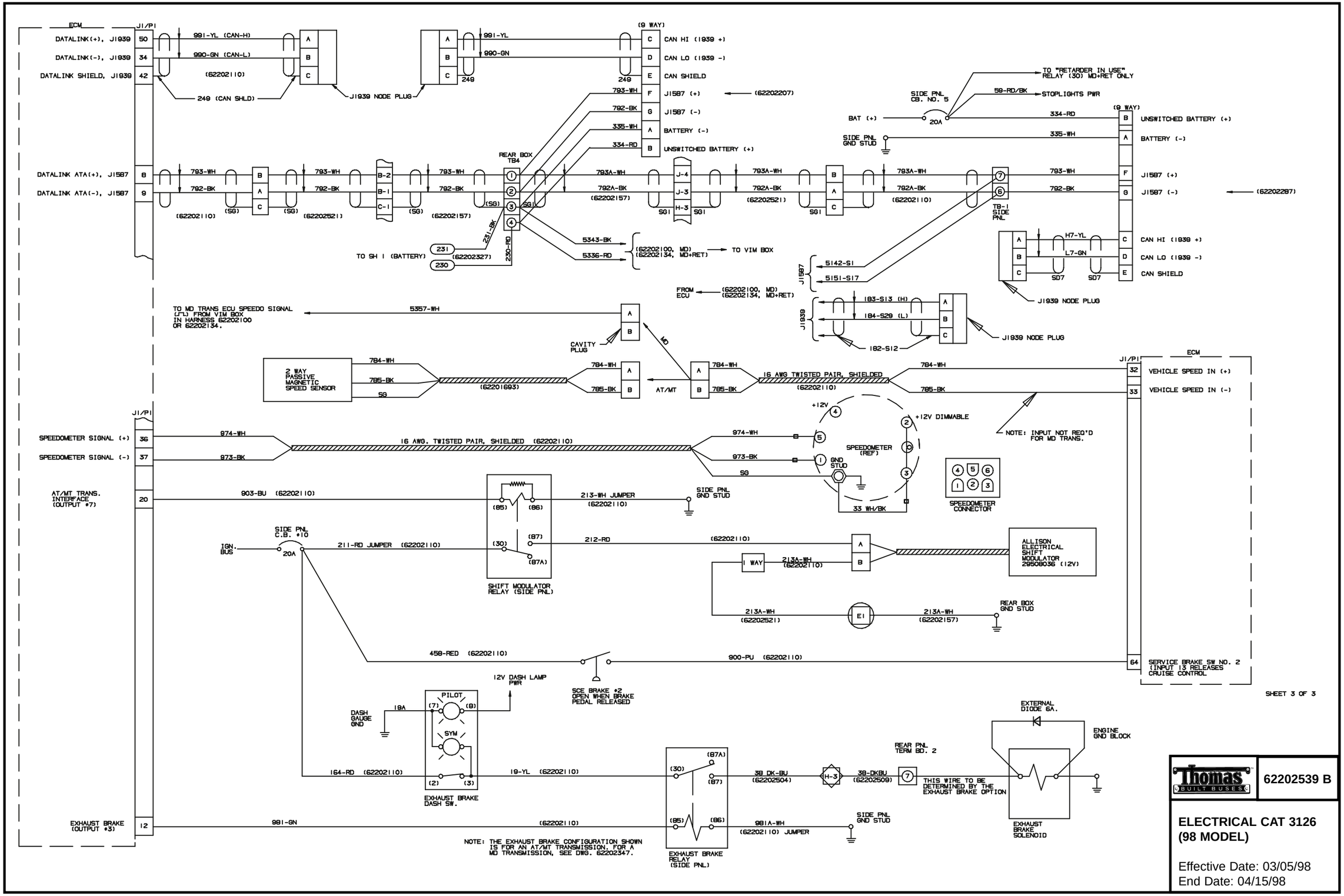

Thomas BUILT BUSES

62202539 B

ELECTRICAL CAT 3126 (98 MODEL)

Effective Date: 03/05/98
End Date: 04/15/98

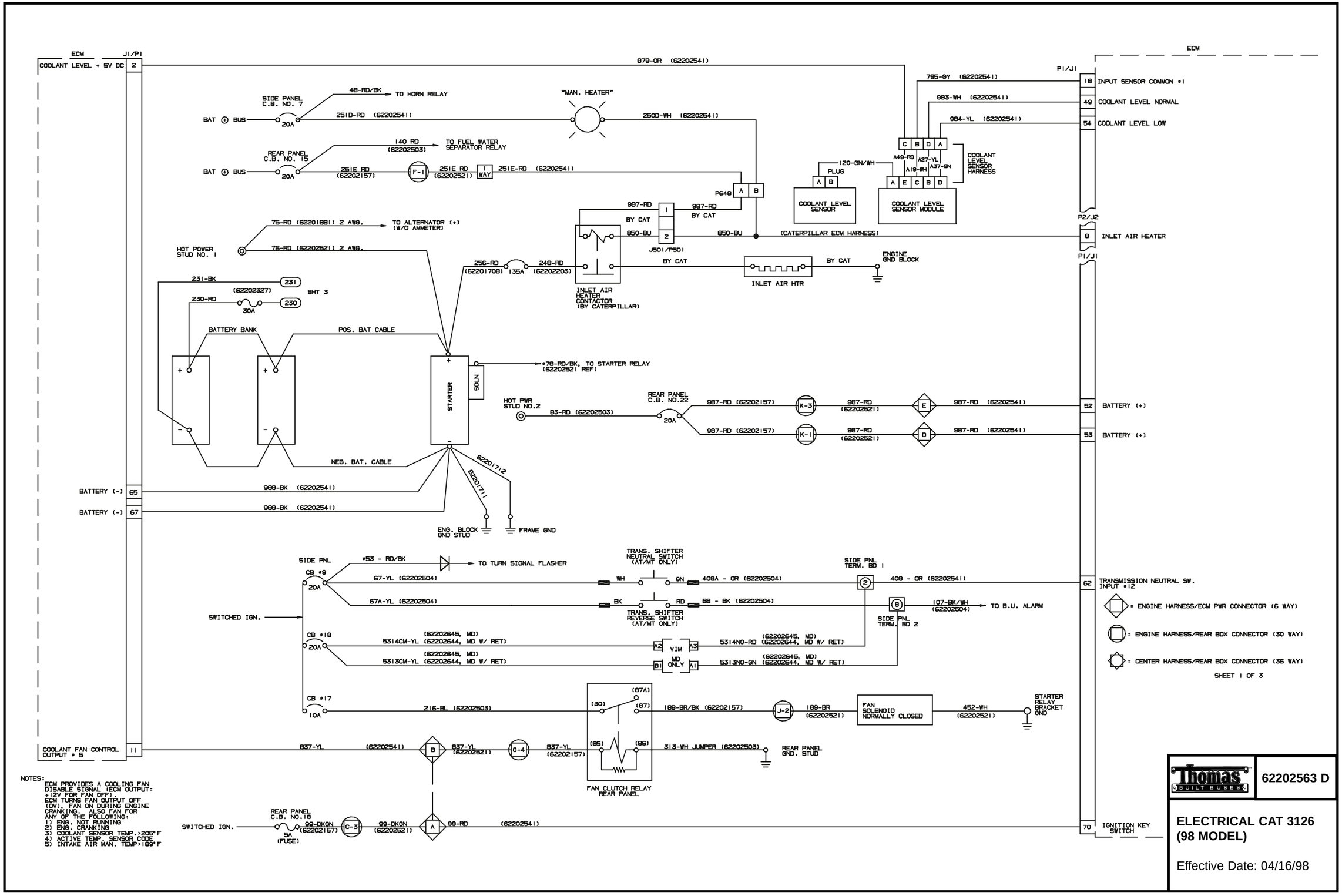
ECM
J1/P1
COOLANT LEVEL + 5V DC
2
879-OR (62202541)
SIDE PANEL C.B. NO. 7
48-RD/BK
TO HORN RELAY
BAT ⊕ BUS
20A
251D-RD (62202541)
"MAN. HEATER"
250D-WH (62202541)
REAR PANEL C.B. NO. 15
140 RD (62202503)
TO FUEL WATER SEPARATOR RELAY
251E RD (62202157)
F-1
251E RD (62202521)
1 WAY
251E-RD (62202541)
P648
987-RD
BY CAT
850-BU
J501/P501
INLET AIR HEATER CONTACTOR (BY CATERPILLAR)
75-RD (62201881) 2 AWG.
TO ALTERNATOR (+) (W/O AMMETER)
HOT POWER STUD NO. 1
76-RD (62202521) 2 AWG.
256-RD (62201708)
135A
248-RD (62202203)
INLET AIR HTR
ENGINE GND BLOCK
231-BK
(62202327)
231
SHT 3
230-RD
30A
230
BATTERY BANK
POS. BAT CABLE
STARTER
SOLN
*78-RD/BK, TO STARTER RELAY (62202521 REF)
HOT PWR STUD NO.2
83-RD (62202503)
REAR PANEL C.B. NO.22
987-RD (62202157)
K-3
987-RD (62202521)
E
987-RD (62202541)
K-1
D
NEG. BAT. CABLE
62201712
62201711
BATTERY (-)
65
988-BK (62202541)
67
ENG. BLOCK GND STUD
FRAME GND
SIDE PNL
CB #9
20A
*53 - RD/BK
TO TURN SIGNAL FLASHER
67-YL (62202504)
WH
GN
TRANS. SHIFTER NEUTRAL SWITCH (AT/MT ONLY)
409A - OR (62202504)
SIDE PNL TERM. BD 1
409 - OR (62202541)
SWITCHED IGN.
67A-YL (62202504)
BK
RD
TRANS. SHIFTER REVERSE SWITCH (AT/MT ONLY)
68 - BK (62202504)
107-BK/WH (62202504)
TO B.U. ALARM
SIDE PNL TERM. BD 2
CB #18
20A
(62202645, MD)
5314CM-YL (62202644, MD W/ RET)
A2
VIM
A3
5314NO-RD (62202644, MD W/ RET)
5313CM-YL (62202644, MD W/ RET)
B1
MD ONLY
A1
5313NO-GN (62202644, MD W/ RET)
CB #17
10A
216-BL (62202503)
(87A)
(30)
(87)
189-BR/BK (62202157)
J-2
189-BR (62202521)
FAN SOLENOID NORMALLY CLOSED
452-WH (62202521)
STARTER RELAY BRACKET GND
COOLANT FAN CONTROL OUTPUT # 5
11
837-YL (62202541)
B
837-YL (62202521)
G-4
837-YL (62202157)
(85)
(86)
313-WH JUMPER (62202503)
REAR PANEL GND. STUD
FAN CLUTCH RELAY REAR PANEL
REAR PANEL C.B. NO.18
SWITCHED IGN.
99-DKGN (62202157)
5A (FUSE)
C-3
99-DKGN (62202521)
A
99-RD (62202541)
ECM
P1/J1
795-GY (62202541)
983-WH (62202541)
984-YL (62202541)
18
INPUT SENSOR COMMON #1
49
COOLANT LEVEL NORMAL
54
COOLANT LEVEL LOW
C B D A
A49-RD
A27-YL
A19-WH
A37-GN
COOLANT LEVEL SENSOR HARNESS
120-GN/WH
PLUG
A B
COOLANT LEVEL SENSOR
A E C B D
COOLANT LEVEL SENSOR MODULE
P2/J2
8
INLET AIR HEATER
P1/J1
(CATERPILLAR ECM HARNESS)
52
BATTERY (+)
53
BATTERY (+)
62
TRANSMISSION NEUTRAL SW. INPUT #12
= ENGINE HARNESS/ECM PWR CONNECTOR (6 WAY)
= ENGINE HARNESS/REAR BOX CONNECTOR (30 WAY)
= CENTER HARNESS/REAR BOX CONNECTOR (36 WAY)
SHEET 1 OF 3
70
IGNITION KEY SWITCH
NOTES:
ECM PROVIDES A COOLING FAN DISABLE SIGNAL (ECM OUTPUT= +12V FOR FAN OFF).
ECM TURNS FAN OUTPUT OFF (0V), FAN ON DURING ENGINE CRANKING. ALSO FAN FOR ANY OF THE FOLLOWING:
1) ENG. NOT RUNNING
2) ENG. CRANKING
3) COOLANT SENSOR TEMP.>205°F
4) ACTIVE TEMP - SENSOR CODE
5) INTAKE AIR MAN. TEMP>189°F
Thomas BUILT BUSES
62202563 D
ELECTRICAL CAT 3126 (98 MODEL)
Effective Date: 04/16/98

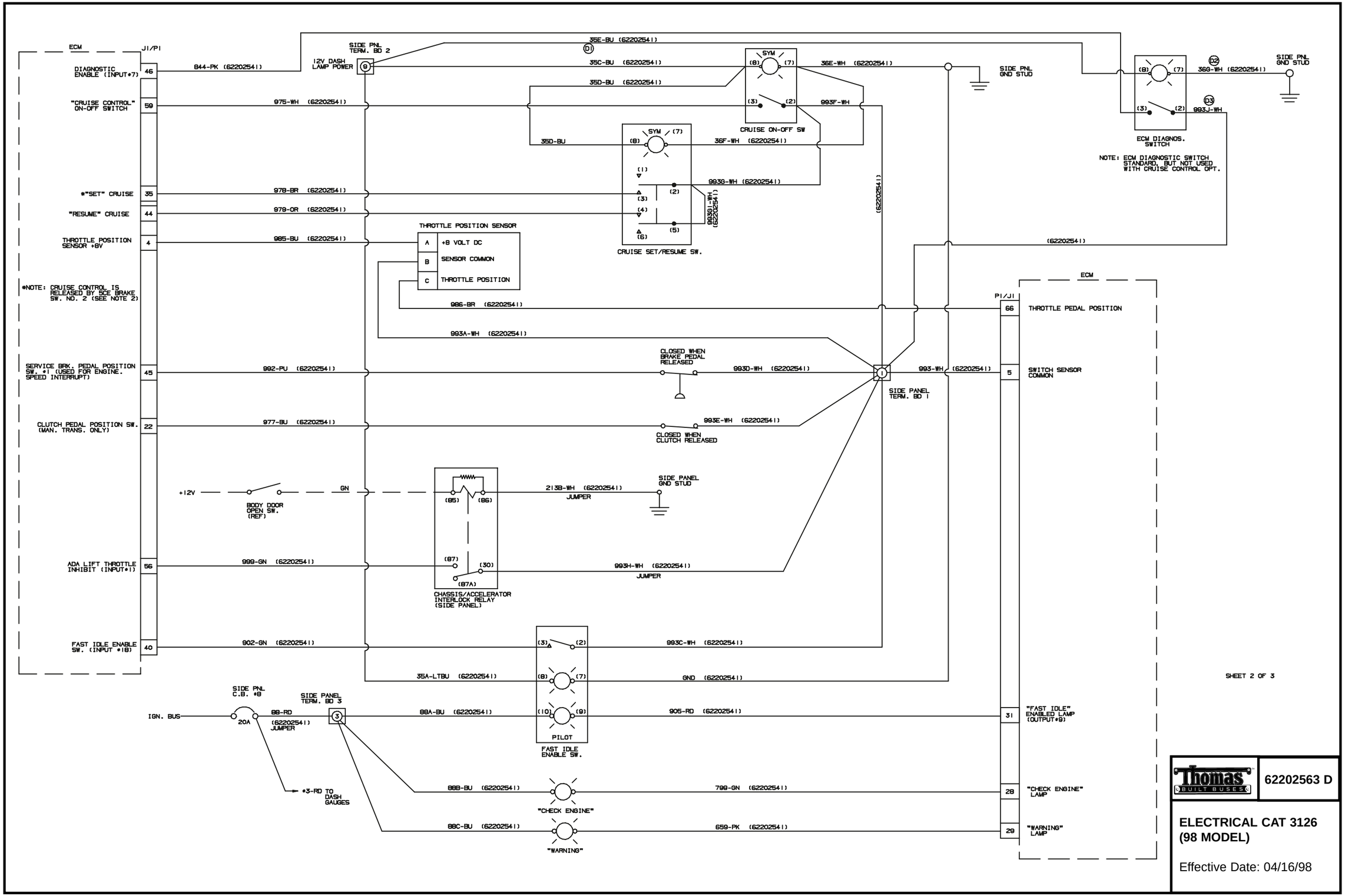

Thomas BUILT BUSES

62202563 D

ELECTRICAL CAT 3126 (98 MODEL)

Effective Date: 04/16/98

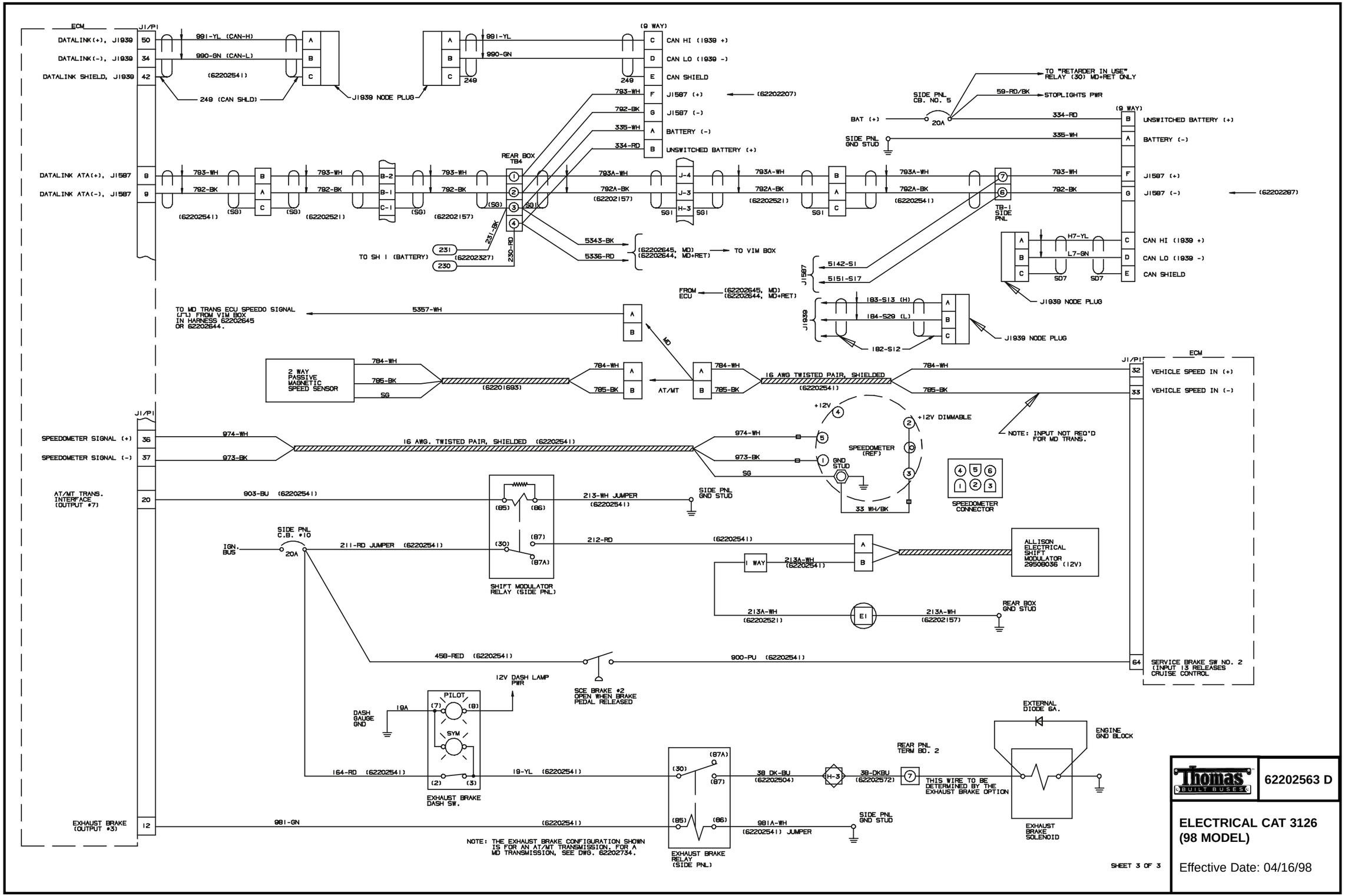
ECM
J1/P1
DATALINK(+), J1939 50
DATALINK(-), J1939 34
DATALINK SHIELD, J1939 42
991-YL (CAN-H)
990-GN (CAN-L)
(62202541)
249 (CAN SHLD)
J1939 NODE PLUG
(9 WAY)
CAN HI (1939 +)
CAN LO (1939 -)
CAN SHIELD
J1587 (+)
J1587 (-)
BATTERY (-)
UNSWITCHED BATTERY (+)
(62202207)
DATALINK ATA(+), J1587 8
DATALINK ATA(-), J1587 9
793-WH
792-BK
REAR BOX TB4
TO SH 1 (BATTERY)
231
230
(62202327)
231-BK
230-RD
5343-BK
5336-RD
(62202645, MD)
(62202644, MD+RET)
TO VIM BOX
(62202157)
(62202521)
793A-WH
792A-BK
TO "RETARDER IN USE" RELAY (30) MD+RET ONLY
59-RD/BK
STOPLIGHTS PWR
SIDE PNL CB. NO. 5
BAT (+)
20A
334-RD
335-WH
SIDE PNL GND STUD
TB-1 SIDE PNL
H7-YL
L7-GN
SD7
5142-S1
5151-S17
J1587
FROM ECU
183-S13 (H)
184-S29 (L)
182-S12
J1939
TO MD TRANS ECU SPEEDO SIGNAL (J"L) FROM VIM BOX IN HARNESS 62202645 OR 62202644.
5357-WH
MD
2 WAY PASSIVE MAGNETIC SPEED SENSOR
784-WH
785-BK
SG
(62201693)
AT/MT
16 AWG TWISTED PAIR, SHIELDED
(62202541)
VEHICLE SPEED IN (+) 32
VEHICLE SPEED IN (-) 33
SPEEDOMETER SIGNAL (+) 36
SPEEDOMETER SIGNAL (-) 37
974-WH
973-BK
16 AWG. TWISTED PAIR, SHIELDED (62202541)
+12V
+12V DIMMABLE
SPEEDOMETER (REF)
GND STUD
33 WH/BK
NOTE: INPUT NOT REQ'D FOR MD TRANS.
SPEEDOMETER CONNECTOR
AT/MT TRANS. INTERFACE (OUTPUT #7) 20
903-BU (62202541)
213-WH JUMPER (62202541)
SIDE PNL GND STUD
SHIFT MODULATOR RELAY (SIDE PNL)
(85)
(86)
(30)
(87)
(87A)
IGN. BUS
SIDE PNL C.B. #10
20A
211-RD JUMPER (62202541)
212-RD
1 WAY
213A-WH
ALLISON ELECTRICAL SHIFT MODULATOR 29508036 (12V)
REAR BOX GND STUD
E1
458-RED (62202541)
900-PU (62202541)
SERVICE BRAKE SW NO. 2 (INPUT 13 RELEASES CRUISE CONTROL) 64
12V DASH LAMP PWR
SCE BRAKE #2 OPEN WHEN BRAKE PEDAL RELEASED
DASH GAUGE GND
19A
PILOT
SYM
EXHAUST BRAKE DASH SW.
164-RD (62202541)
19-YL (62202541)
38 DK-BU (62202504)
39-DKBU (62202572)
REAR PNL TERM BD. 2
THIS WIRE TO BE DETERMINED BY THE EXHAUST BRAKE OPTION
EXTERNAL DIODE 6A.
ENGINE GND BLOCK
EXHAUST BRAKE SOLENOID
EXHAUST BRAKE (OUTPUT #3) 12
981-GN
981A-WH (62202541) JUMPER
NOTE: THE EXHAUST BRAKE CONFIGURATION SHOWN IS FOR AN AT/MT TRANSMISSION. FOR A MD TRANSMISSION, SEE DWG. 62202734.
EXHAUST BRAKE RELAY (SIDE PNL)
SHEET 3 OF 3
Thomas BUILT BUSES
62202563 D
ELECTRICAL CAT 3126 (98 MODEL)
Effective Date: 04/16/98

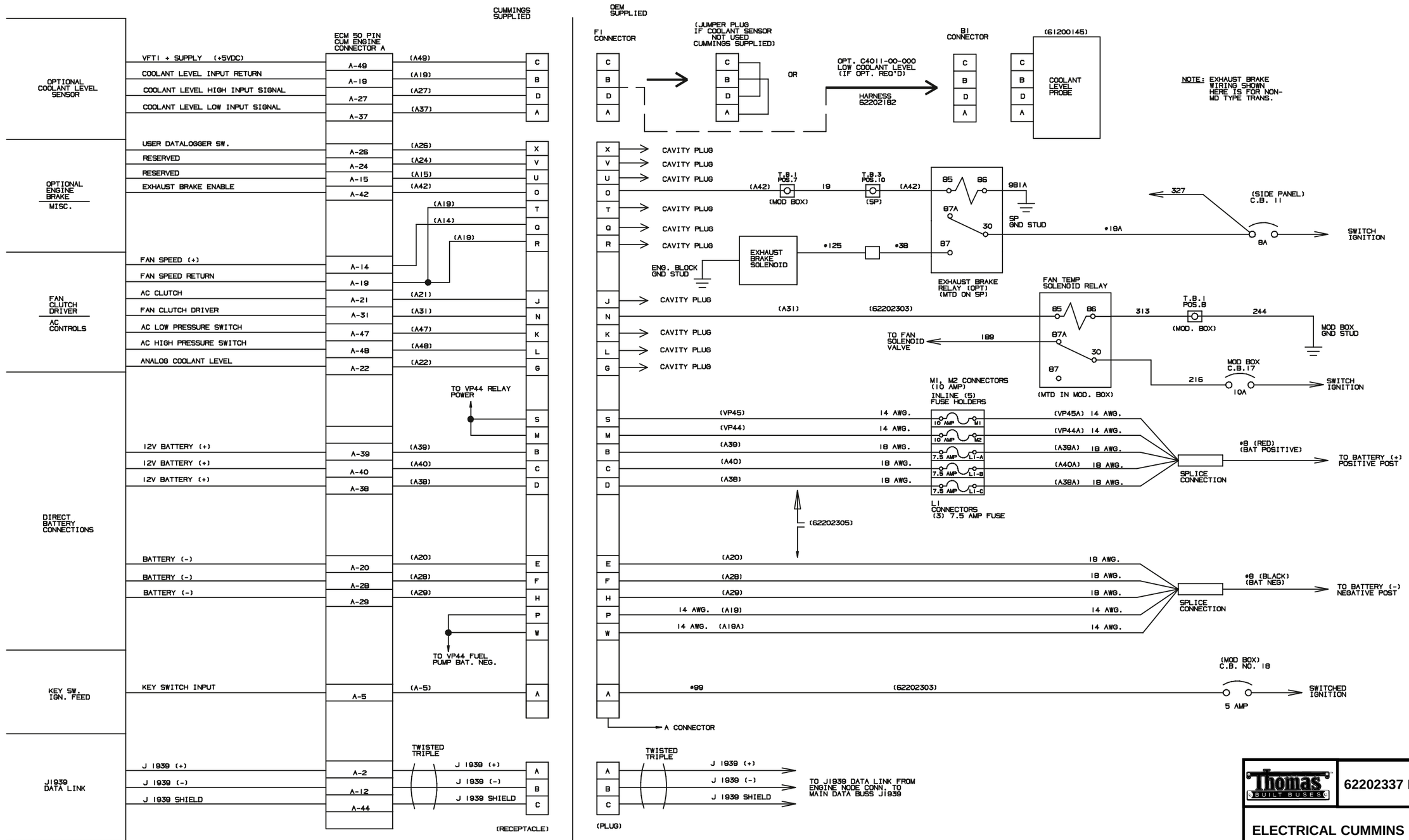
CUMMINGS SUPPLIED
OEM SUPPLIED
ECM 50 PIN CUM ENGINE CONNECTOR A
OPTIONAL COOLANT LEVEL SENSOR
VFT1 + SUPPLY (+5VDC)
COOLANT LEVEL INPUT RETURN
COOLANT LEVEL HIGH INPUT SIGNAL
COOLANT LEVEL LOW INPUT SIGNAL
OPTIONAL ENGINE BRAKE MISC.
USER DATALOGGER SW.
RESERVED
RESERVED
EXHAUST BRAKE ENABLE
FAN CLUTCH DRIVER
AC CONTROLS
FAN SPEED (+)
FAN SPEED RETURN
AC CLUTCH
FAN CLUTCH DRIVER
AC LOW PRESSURE SWITCH
AC HIGH PRESSURE SWITCH
ANALOG COOLANT LEVEL
DIRECT BATTERY CONNECTIONS
12V BATTERY (+)
12V BATTERY (+)
12V BATTERY (+)
BATTERY (-)
BATTERY (-)
BATTERY (-)
KEY SW. IGN. FEED
KEY SWITCH INPUT
J1939 DATA LINK
J 1939 (+)
J 1939 (-)
J 1939 SHIELD
TO VP44 RELAY POWER
TO VP44 FUEL PUMP BAT. NEG.
TWISTED TRIPLE
(RECEPTACLE)
F1 CONNECTOR
(JUMPER PLUG IF COOLANT SENSOR NOT USED CUMMINGS SUPPLIED)
OR
OPT. C4011-00-000 LOW COOLANT LEVEL (IF OPT. REQ'D)
HARNESS 62202182
B1 CONNECTOR
(61200145)
COOLANT LEVEL PROBE
NOTE: EXHAUST BRAKE WIRING SHOWN HERE IS FOR NON-MD TYPE TRANS.
CAVITY PLUG
T.B.1 POS.7
T.B.3 POS.10
(MOD BOX)
(SP)
EXHAUST BRAKE SOLENOID
ENG. BLOCK GND STUD
EXHAUST BRAKE RELAY (OPT) (MTD ON SP)
SP GND STUD
(SIDE PANEL) C.B. 11
SWITCH IGNITION
FAN TEMP SOLENOID RELAY
(MTD IN MOD. BOX)
T.B.1 POS.8
MOD BOX GND STUD
TO FAN SOLENOID VALVE
MOD BOX C.B.17
M1, M2 CONNECTORS (10 AMP)
INLINE (5) FUSE HOLDERS
L1 CONNECTORS (3) 7.5 AMP FUSE
SPLICE CONNECTION
•8 (RED) (BAT POSITIVE)
TO BATTERY (+) POSITIVE POST
•8 (BLACK) (BAT NEG)
TO BATTERY (-) NEGATIVE POST
(MOD BOX) C.B. NO. 18
5 AMP
SWITCHED IGNITION
A CONNECTOR
(PLUG)
TO J1939 DATA LINK FROM ENGINE NODE CONN. TO MAIN DATA BUSS J1939
Thomas BUILT BUSES
62202337 B
ELECTRICAL CUMMINS 6B ENG. OEM INTERFACE CONN. A (98 MODEL)
End Date: 08/11/98

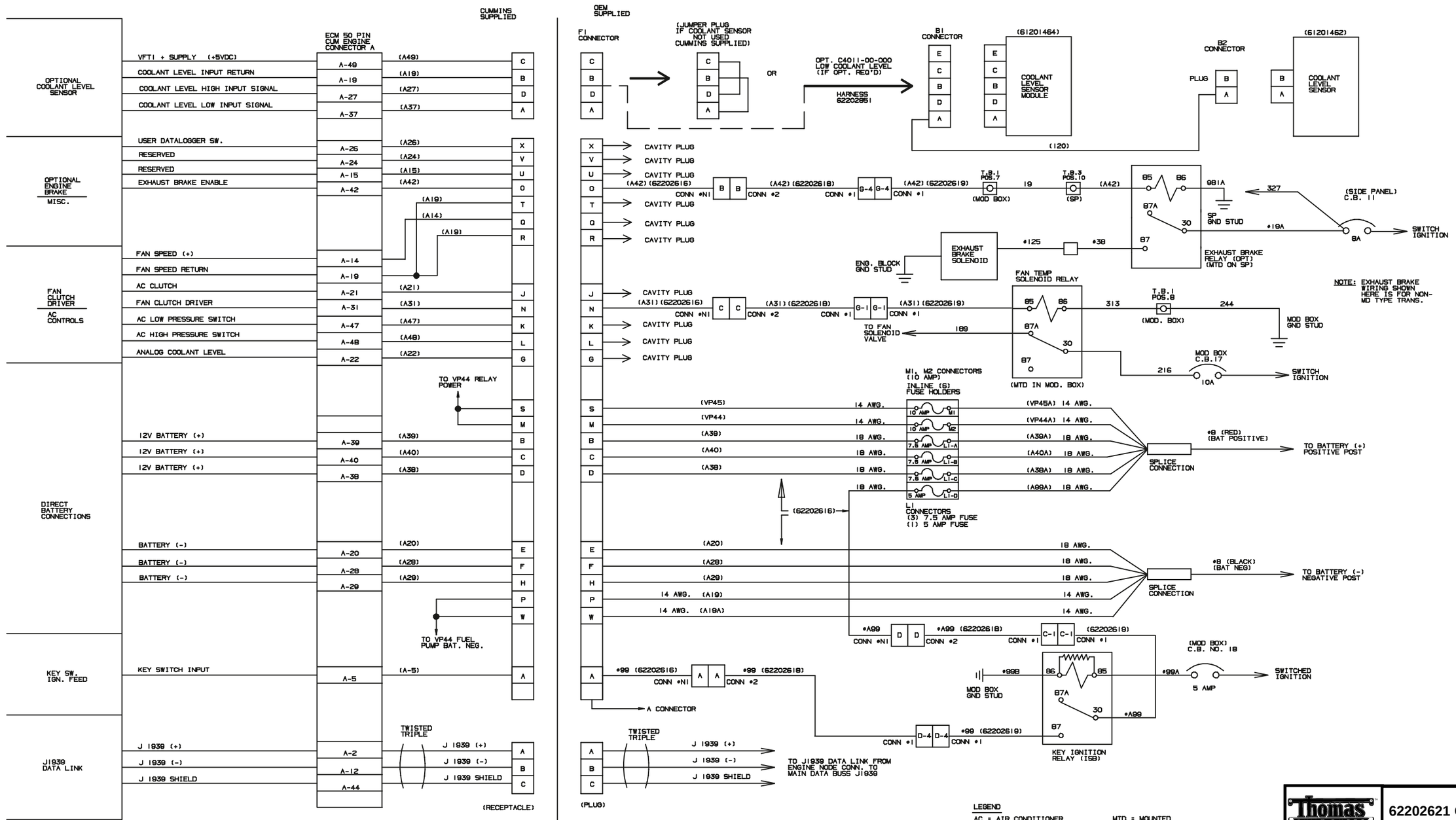

LEGEND

AC = AIR CONDITIONER
BAT = BATTERY
C.B. = CIRCUIT BREAKER
CONN = CONNECTOR
CUM = CUMMINS
ECM = ENGINE CONTROL MODULE
ENG = ENGINE
GND = GROUND
MOD BOX = REAR ELECTRICAL MODULAR BOX
MTD = MOUNTED
OPT = OPTION
REQ'D = REQUIRED
SP = FRONT ELECTRICAL SIDE PANEL
SW = SWITCH
T.B. = TERMINAL BOARD
TEMP = TEMPERATURE
TRANS = TRANSMISSION

Thomas BUILT BUSES

62202621 C

ELECTRICAL CUMMINS ISB ENG., OEM INTER-FACE CONN. A (98 MODEL)

Effective Date: 08/12/98

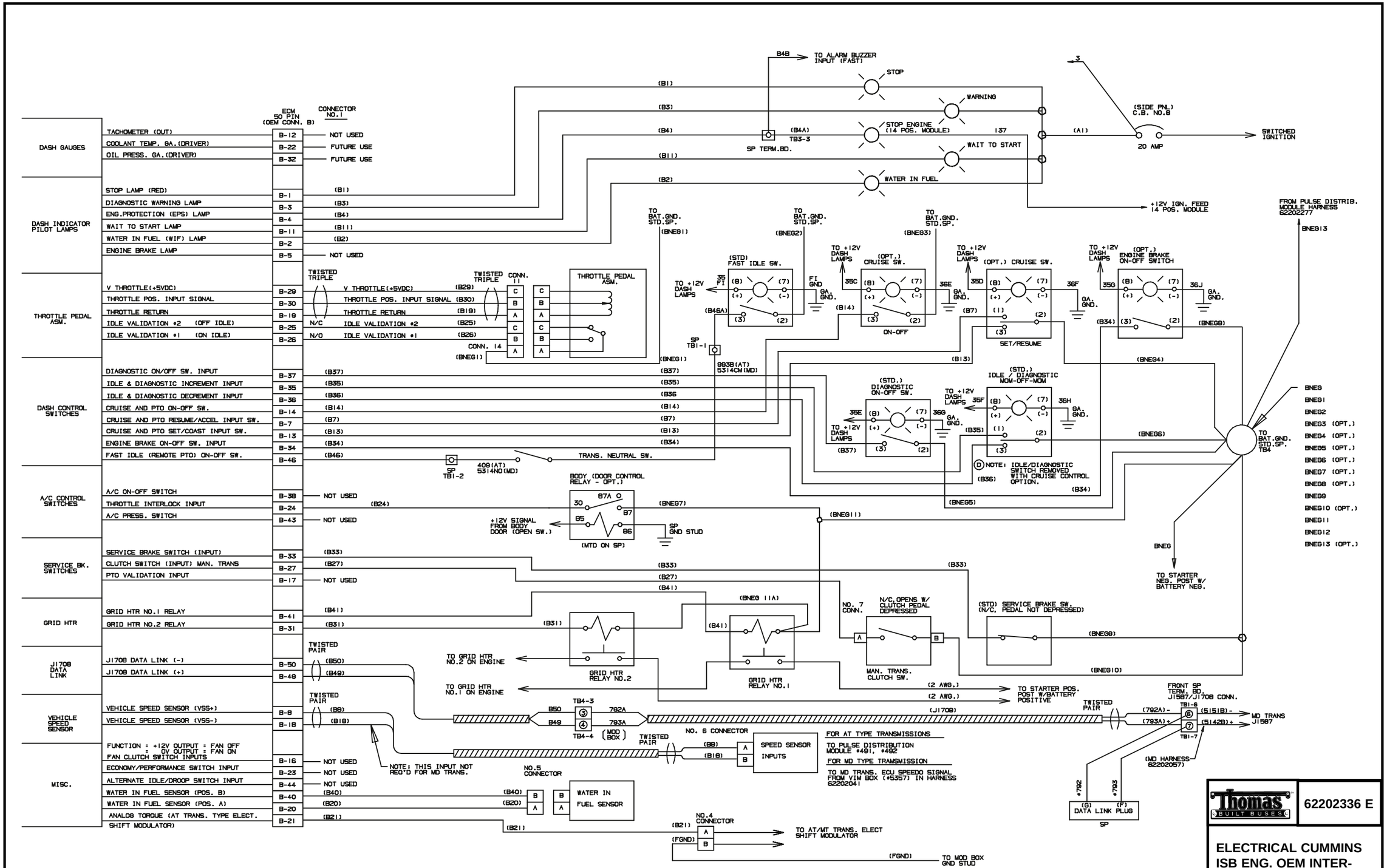

Thomas BUILT BUSES

62202336 E

ELECTRICAL CUMMINS ISB ENG. OEM INTER-FACE CONN. B (98 MODEL)

End Date: 09/21/98

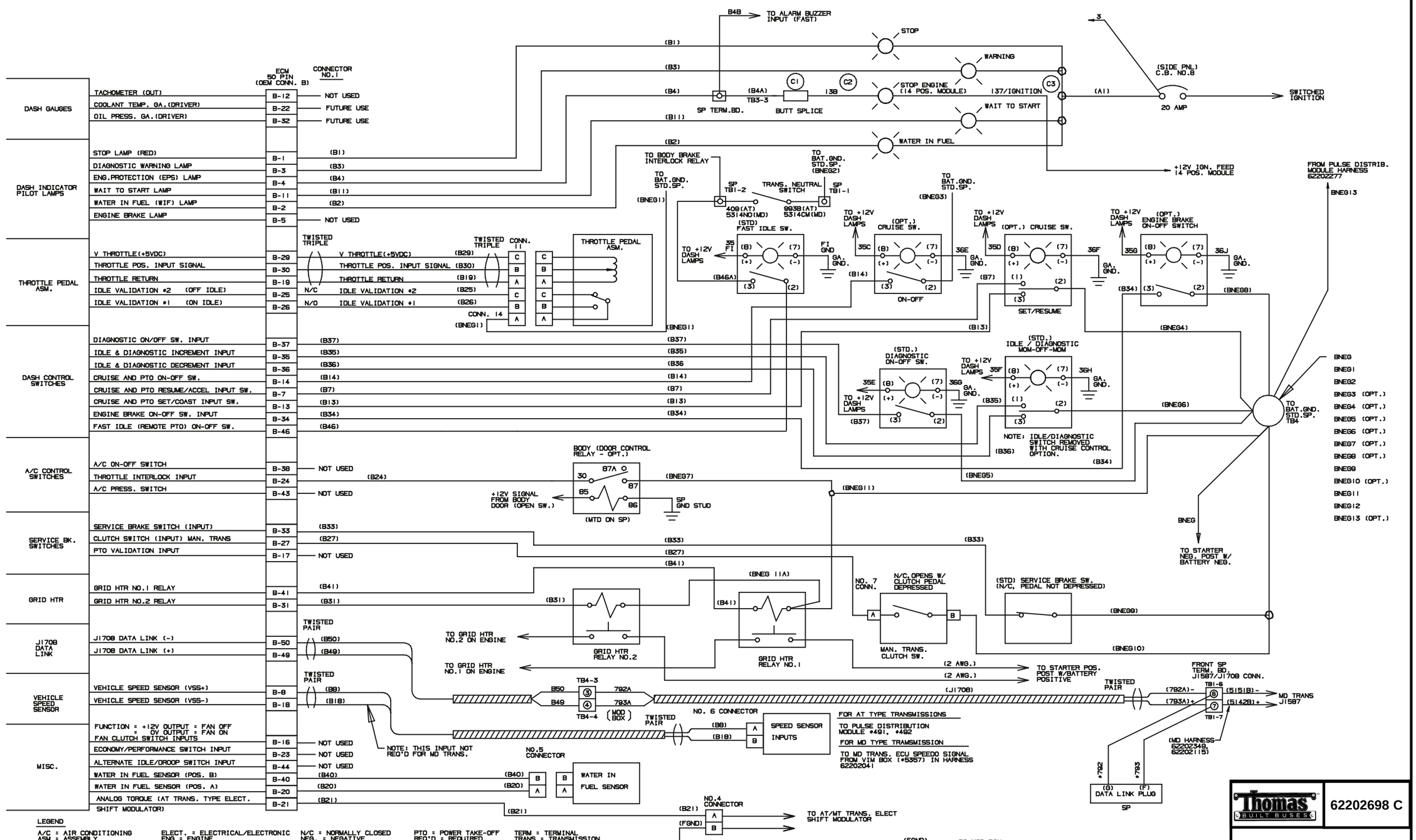

LEGEND

A/C = AIR CONDITIONING
ASM = ASSEMBLY
BAT = BATTERY
BK = BRAKE
C.B. = CIRCUIT BREAKER
CONN = CONNECTOR
DISTRIB = DISTRIBUTION
ECM = ENGINE CONTROL MODULE
ELECT. = ELECTRICAL/ELECTRONIC
ENG = ENGINE
GA. = GAUGE
GND = GROUND
HTR = HEATER
IGN = IGNITION
MAN. = MANUAL
MISC. = MISCELLANEOUS
N/C = NORMALLY CLOSED
NEG. = NEGATIVE
NO. = NUMBER
OEM = ORIGINAL EQUIPMENT MANUFACTURER
OPT = OPTION
POS. = POSITION/POSITIVE
PRESS = PRESSURE
PTO = POWER TAKE-OFF
REQ'D = REQUIRED
SP = FRONT ELECTRICAL SIDE PANEL
STD = STUD
SW = SWITCH
TB = TERMINAL BOARD
TEMP = TEMPERATURE
TERM = TERMINAL
TRANS = TRANSMISSION
VIM = VEHICLE INTERFACE MODULE
VSS = VEHICLE SPEED SENSOR
W/ = WITH

COMPUTER ORIGINAL -- DO NOT MAKE MANUAL CHANGES

Thomas BUILT BUSES

62202698 C

ELECTRICAL CUMMINS ISB/ISC ENG., OEM INTERFACE CONN. B (98 MODEL)

Effective Date: 09/21/98

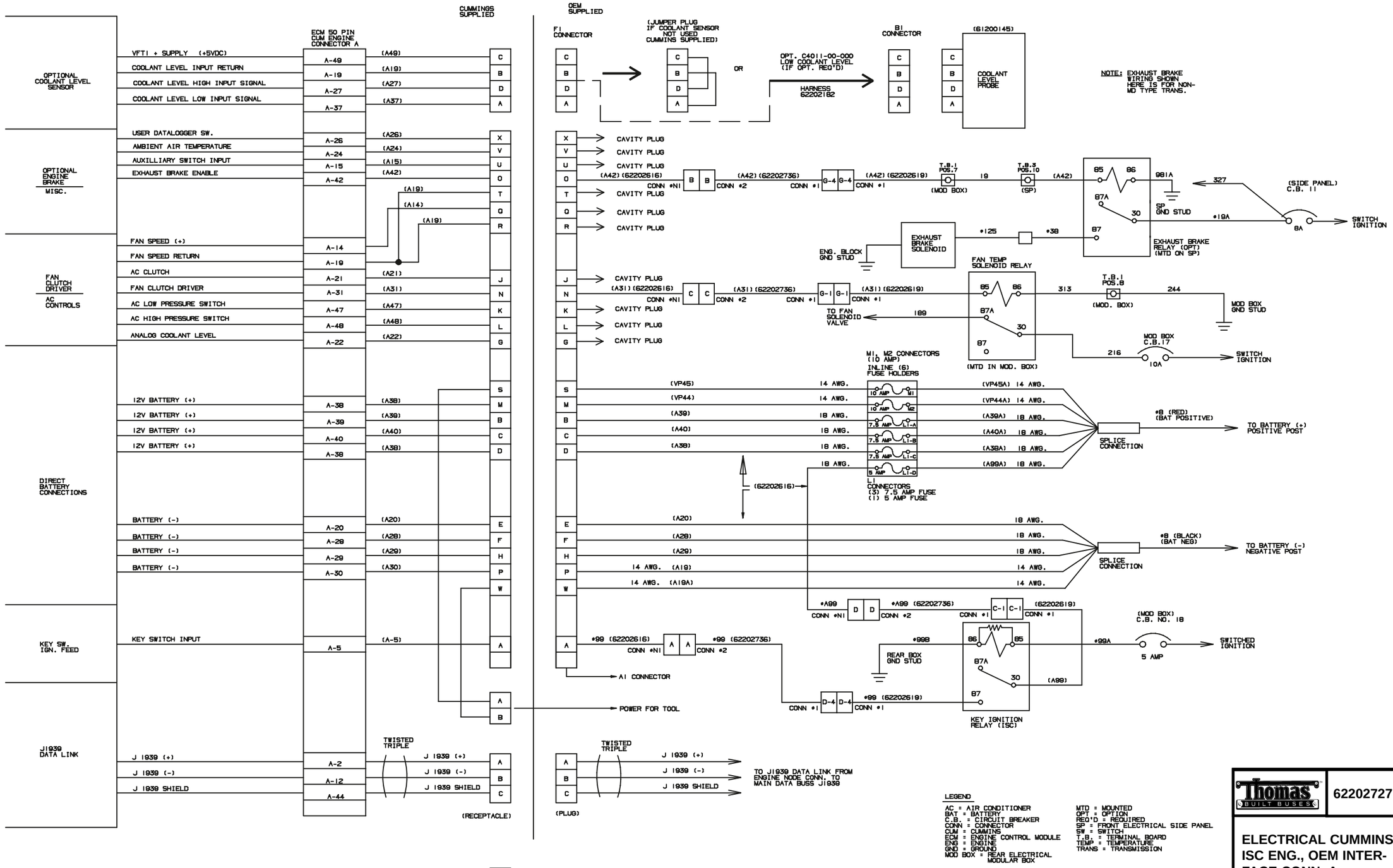

LEGEND

AC = AIR CONDITIONER
BAT = BATTERY
C.B. = CIRCUIT BREAKER
CONN = CONNECTOR
CUM = CUMMINS
ECM = ENGINE CONTROL MODULE
ENG = ENGINE
GND = GROUND
MOD BOX = REAR ELECTRICAL MODULAR BOX
MTD = MOUNTED
OPT = OPTION
REQ'D = REQUIRED
SP = FRONT ELECTRICAL SIDE PANEL
SW = SWITCH
T.B. = TERMINAL BOARD
TEMP = TEMPERATURE
TRANS = TRANSMISSION

Thomas BUILT BUSES

62202727 A

ELECTRICAL CUMMINS ISC ENG., OEM INTERFACE CONN. A (98 MODEL)

Effective Date: 08/10/98

NOTES:

MVP-ER
TRANSMISSION
SCHEMATICS

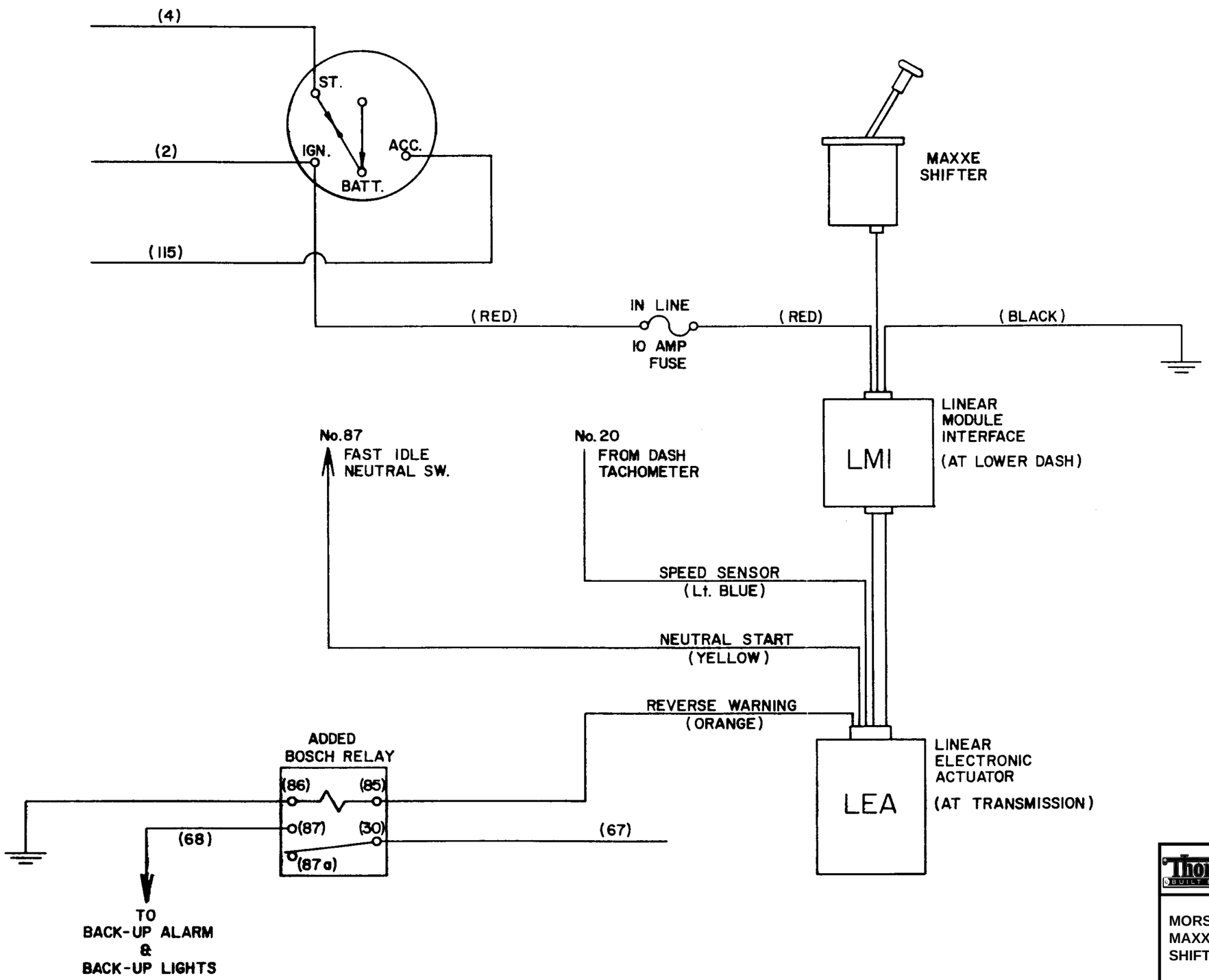
(4)
(2)
(115)
ST.
IGN.
ACC.
BATT.
MAXXE SHIFTER
(RED)
IN LINE
10 AMP FUSE
(RED)
(BLACK)
LINEAR MODULE INTERFACE
(AT LOWER DASH)
LMI
No. 87
FAST IDLE NEUTRAL SW.
No. 20
FROM DASH TACHOMETER
SPEED SENSOR
(Lt. BLUE)
NEUTRAL START
(YELLOW)
REVERSE WARNING
(ORANGE)
ADDED BOSCH RELAY
(86)
(85)
(87)
(30)
(87a)
(68)
(67)
TO BACK-UP ALARM & BACK-UP LIGHTS
LINEAR ELECTRONIC ACTUATOR
(AT TRANSMISSION)
LEA
Thomas BUILT BUSES
62200801 A
MORSE ELECTRONIC MAXXE TRANSMISSION SHIFTER (L.A. UNIFIED)

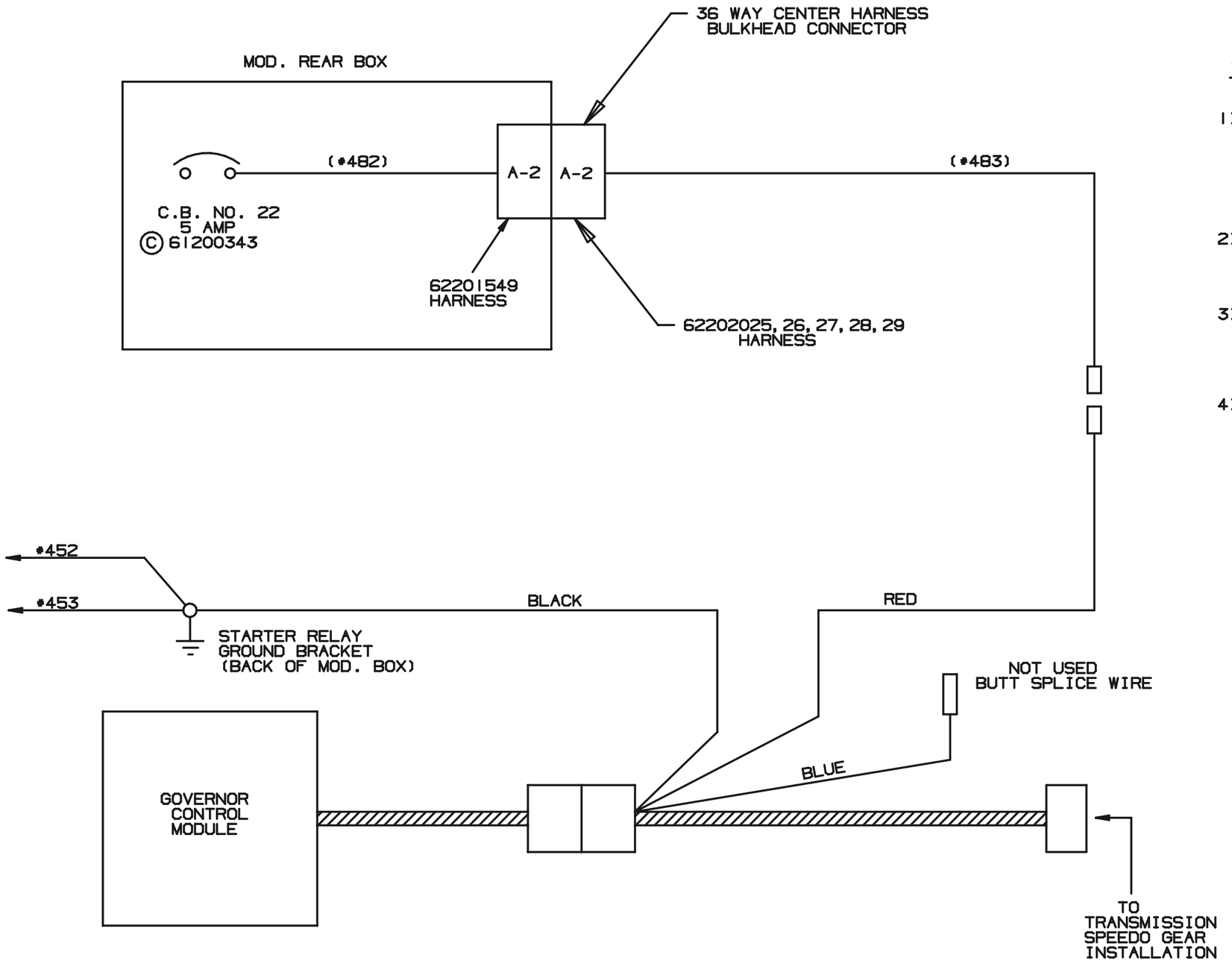

WIRING INSTALLATION INSTRUCTIONS

1) BEFORE MOUNTING CENTER HARNESS (62202025, 2026, 2027, 2028, 2029) MODULAR REAR BOX CONNECTOR AND 62201549 INTERIOR MODULAR REAR BOX CONNECTOR, INSTALL STURDY GOVERNOR WIRE JUMPER SET 62201906 INTO APPROPRIATE CONNECTOR BODY.

2) NOTE THAT EACH CONNECTOR BODY MUST HAVE SECONDARY LOCKS REMOVED BEFORE JUMPER SET WIRING CAN BE INSTALLED.

3) REMOVE CAVITY PLUG IN A-2 POSITON OF MAIN CENTER HARNESS CONNECTOR PLUG. THIS POSITION WILL BE USED FOR ROUTING OF WIRE JUMPER SET INTO THE MODULAR REAR BOX.

4) AFTER INSTALLING WIRE JUMPER SET IN EACH APPROPRIATE CONNECTOR BODY OF EACH HARNESS (POS. A-2), THEN HARNESS CONNECTOR BODIES AND HARNESS WIRING CAN BE MOUNTED AND WIRED IN NORMAL FASHION. REFER TO THIS DWG. FOR STURDY GOVERNOR WIRING REQUIRED.

Thomas BUILT BUSES

62201905 C

ELECT. STURDY
GOVERNOR, CAT 3116

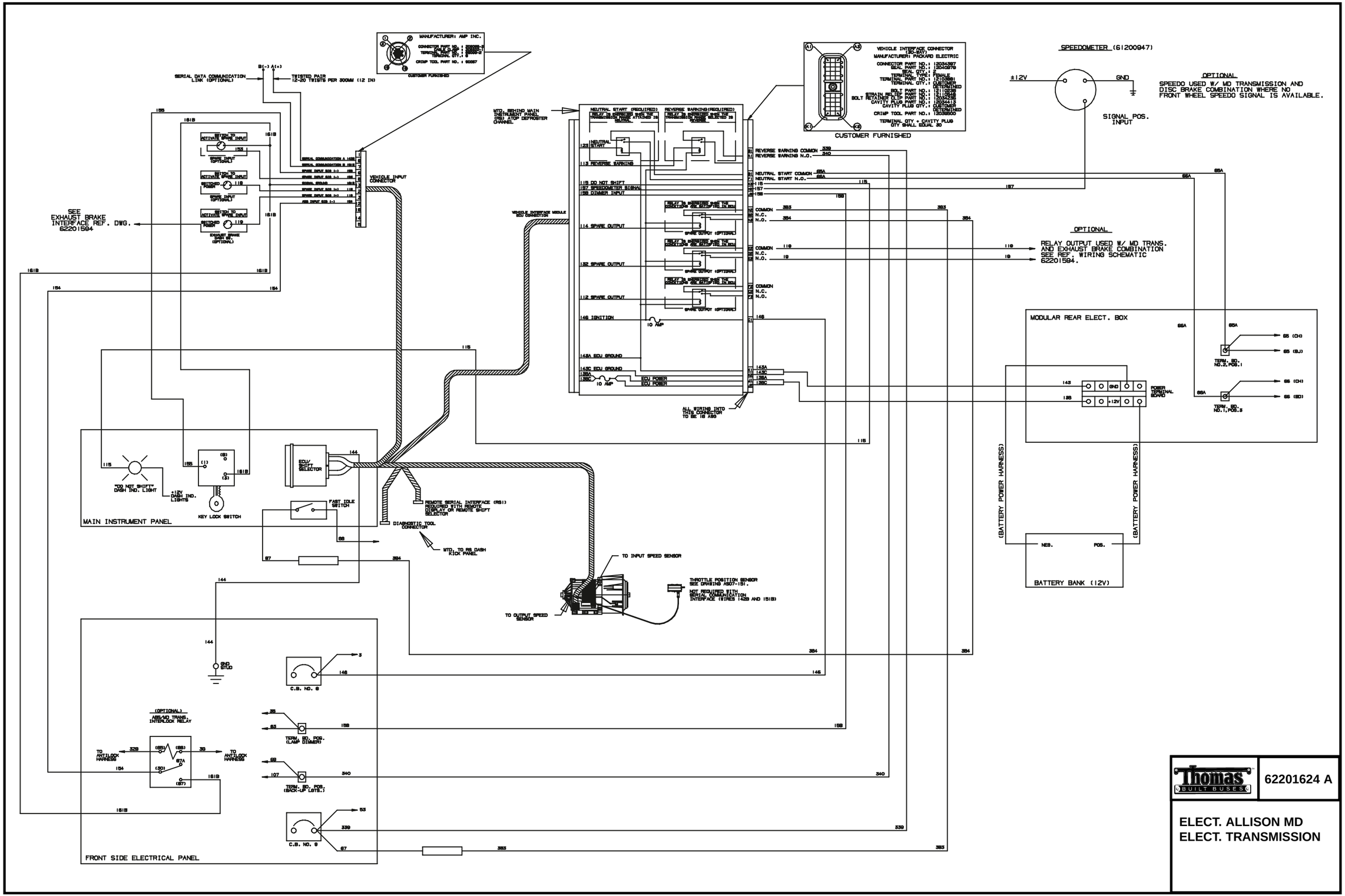
MANUFACTURER: AMP INC.
CUSTOMER FURNISHED
SERIAL DATA COMMUNICATION LINK (OPTIONAL)
TWISTED PAIR 12-20 TWISTS PER 300MM (12 IN)
VEHICLE INPUT CONNECTOR
SEE EXHAUST BRAKE INTERFACE REF. DWG. 62201594
MTD. BEHIND MAIN INSTRUMENT PANEL (RS) ATOP DEFROSTER CHANNEL
NEUTRAL START (REQUIRED)
REVERSE WARNING (REQUIRED)
VEHICLE INTERFACE MODULE (VIM) CONNECTION
ALL WIRING INTO THIS CONNECTOR TO BE 18 AWG
VEHICLE INTERFACE CONNECTOR (16 CAV.)
MANUFACTURER: PACKARD ELECTRIC
CUSTOMER FURNISHED
SPEEDOMETER (61200947)
±12V
GND
SIGNAL POS. INPUT
OPTIONAL
SPEEDO USED W/ MD TRANSMISSION AND DISC BRAKE COMBINATION WHERE NO FRONT WHEEL SPEEDO SIGNAL IS AVAILABLE.
OPTIONAL
RELAY OUTPUT USED W/ MD TRANS. AND EXHAUST BRAKE COMBINATION SEE REF. WIRING SCHEMATIC 62201594.
MODULAR REAR ELECT. BOX
POWER TERMINAL BOARD
TERM. BD. NO.2,POS.1
TERM. BD. NO.1,POS.5
(BATTERY POWER HARNESS)
NEG.
POS.
BATTERY BANK (12V)
"DO NOT SHIFT" DASH IND. LIGHT
+12V DASH IND. LIGHTS
KEY LOCK SWITCH
ECU/ SHIFT SELECTOR
FAST IDLE SWITCH
MAIN INSTRUMENT PANEL
REMOTE SERIAL INTERFACE (RSI) REQUIRED WITH REMOTE DISPLAY OR REMOTE SHIFT SELECTOR
DIAGNOSTIC TOOL CONNECTOR
MTD. TO RS DASH KICK PANEL
TO INPUT SPEED SENSOR
TO OUTPUT SPEED SENSOR
THROTTLE POSITION SENSOR SEE DRAWING A507-151.
NOT REQUIRED WITH SERIAL COMMUNICATION INTERFACE (WIRES 142B AND 151B)
GND STUD
C.B. NO. 8
(OPTIONAL) ABS/MD TRANS. INTERLOCK RELAY
TO ANTILOCK HARNESS
TERM. BD. POS. (LAMP DIMMER)
TERM. BD. POS. (BACK-UP LGHTS.)
FRONT SIDE ELECTRICAL PANEL
Thomas BUILT BUSES
62201624 A
ELECT. ALLISON MD
ELECT. TRANSMISSION

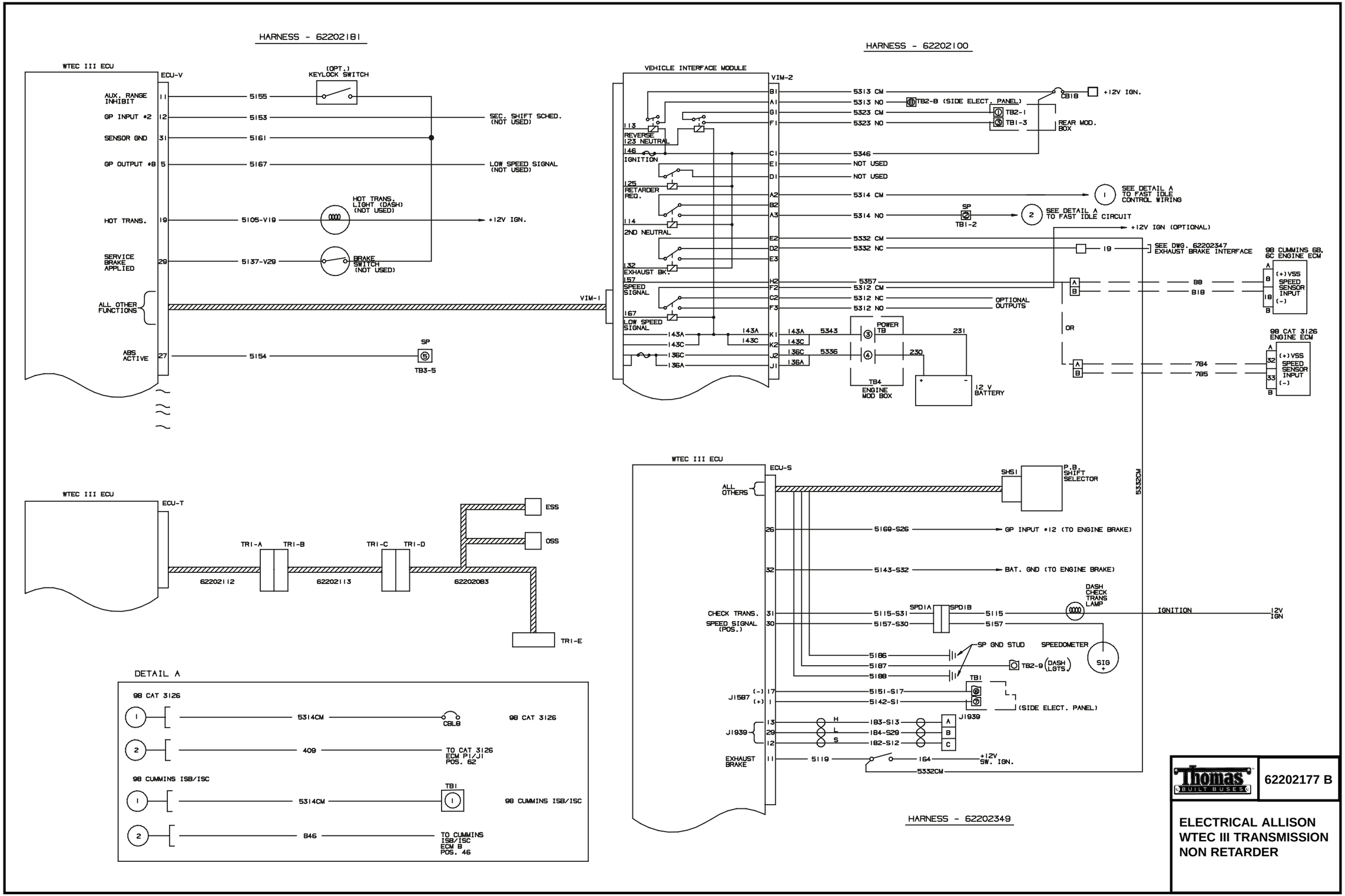
HARNESS - 62202181
WTEC III ECU
ECU-V
AUX. RANGE INHIBIT
GP INPUT #2
SENSOR GND
GP OUTPUT #8
HOT TRANS.
SERVICE BRAKE APPLIED
ALL OTHER FUNCTIONS
ABS ACTIVE
(OPT.) KEYLOCK SWITCH
5155
5153
5161
5167
5105-V19
5137-V29
5154
SEC. SHIFT SCHED. (NOT USED)
LOW SPEED SIGNAL (NOT USED)
HOT TRANS. LIGHT (DASH) (NOT USED)
+12V IGN.
BRAKE SWITCH (NOT USED)
SP
TB3-5
VIM-1
HARNESS - 62202100
VEHICLE INTERFACE MODULE
VIM-2
REVERSE 123 NEUTRAL
IGNITION
RETARDER REQ.
2ND NEUTRAL
EXHAUST BK.
SPEED SIGNAL
LOW SPEED SIGNAL
5313 CM
5313 NO
5323 CM
5323 NO
5346
NOT USED
5314 CM
5314 NO
5332 CM
5332 NC
5357
5312 CM
5312 NC
5312 NO
TB2-8 (SIDE ELECT. PANEL)
TB2-1
TB1-3
CB18
+12V IGN.
REAR MOD. BOX
SEE DETAIL A TO FAST IDLE CONTROL WIRING
SEE DETAIL A TO FAST IDLE CIRCUIT
TB1-2
+12V IGN (OPTIONAL)
SEE DWG. 62202347 EXHAUST BRAKE INTERFACE
OPTIONAL OUTPUTS
POWER TB
TB4 ENGINE MOD BOX
12 V BATTERY
5343
5336
231
230
OR
98 CUMMINS 8B, 6C ENGINE ECM
(+)VSS SPEED SENSOR INPUT (-)
B8
B18
98 CAT 3126 ENGINE ECM
784
785
WTEC III ECU
ECU-T
TRI-A
TRI-B
TRI-C
TRI-D
TRI-E
62202112
62202113
62202083
ESS
OSS
DETAIL A
98 CAT 3126
5314CM
CB18
409
TO CAT 3126 ECM P1/J1 POS. 62
98 CUMMINS ISB/ISC
TB1
B46
TO CUMMINS ISB/ISC ECM B POS. 46
WTEC III ECU
ECU-S
ALL OTHERS
SHS1
P.B. SHIFT SELECTOR
5332CM
5169-S26
GP INPUT #12 (TO ENGINE BRAKE)
5143-S32
BAT. GND (TO ENGINE BRAKE)
DASH CHECK TRANS LAMP
CHECK TRANS.
SPEED SIGNAL (POS.)
5115-S31
5157-S30
SPD1A
SPD1B
5115
5157
IGNITION
12V IGN
SP GND STUD
SPEEDOMETER
SIG +
5186
5187
5188
TB2-9 (DASH LGTS.)
TB1
J1587
5151-S17
5142-S1
(SIDE ELECT. PANEL)
J1939
183-S13
184-S29
182-S12
EXHAUST BRAKE
5119
164
+12V SW. IGN.
HARNESS - 62202349
Thomas BUILT BUSES
62202177 B
ELECTRICAL ALLISON WTEC III TRANSMISSION NON RETARDER

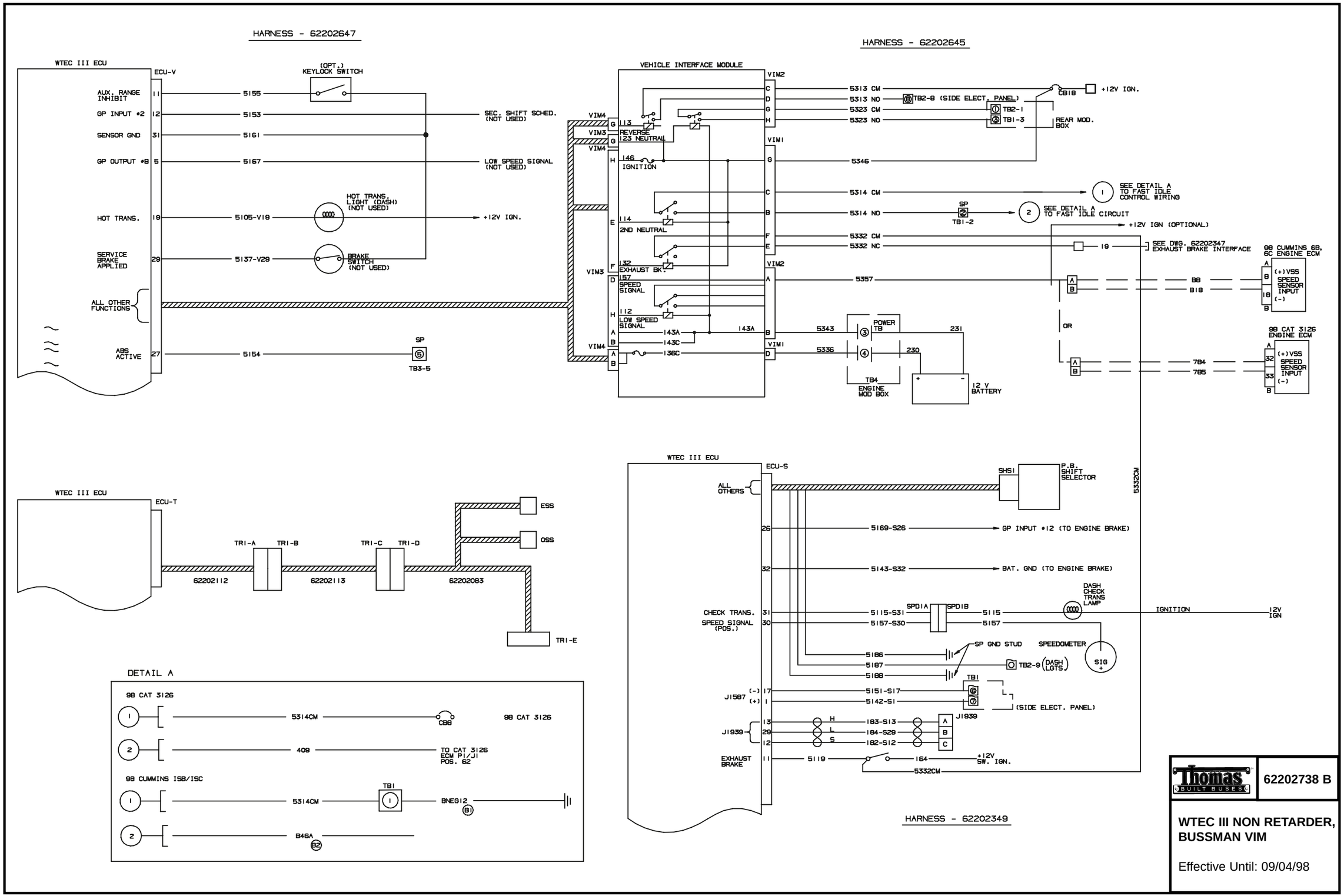
HARNESS - 62202647
HARNESS - 62202645
WTEC III ECU
ECU-V
AUX. RANGE INHIBIT
GP INPUT #2
SENSOR GND
GP OUTPUT #8
HOT TRANS.
SERVICE BRAKE APPLIED
ALL OTHER FUNCTIONS
ABS ACTIVE
(OPT.) KEYLOCK SWITCH
SEC. SHIFT SCHED. (NOT USED)
LOW SPEED SIGNAL (NOT USED)
HOT TRANS. LIGHT (DASH) (NOT USED)
+12V IGN.
BRAKE SWITCH (NOT USED)
TB3-5
VEHICLE INTERFACE MODULE
REVERSE
123 NEUTRAL
IGNITION
2ND NEUTRAL
EXHAUST BK.
SPEED SIGNAL
LOW SPEED SIGNAL
TB2-8 (SIDE ELECT. PANEL)
TB2-1
TB1-3
CB18
REAR MOD. BOX
SEE DETAIL A TO FAST IDLE CONTROL WIRING
SEE DETAIL A TO FAST IDLE CIRCUIT
TB1-2
+12V IGN (OPTIONAL)
SEE DWG. 62202347 EXHAUST BRAKE INTERFACE
98 CUMMINS 6B, 6C ENGINE ECM
(+) VSS SPEED SENSOR INPUT (-)
98 CAT 3126 ENGINE ECM
POWER TB
TB4 ENGINE MOD BOX
12 V BATTERY
OR
WTEC III ECU
ECU-T
TRI-A
TRI-B
TRI-C
TRI-D
TRI-E
62202112
62202113
62202083
ESS
OSS
DETAIL A
98 CAT 3126
5314CM
CB8
409
TO CAT 3126 ECM P1/J1 POS. 62
98 CUMMINS ISB/ISC
TB1
BNEG12
B46A
WTEC III ECU
ECU-S
ALL OTHERS
SHS1
P.B. SHIFT SELECTOR
5332CM
5169-S26
GP INPUT #12 (TO ENGINE BRAKE)
5143-S32
BAT. GND (TO ENGINE BRAKE)
DASH CHECK TRANS LAMP
CHECK TRANS.
SPEED SIGNAL (POS.)
SPD1A
SPD1B
IGNITION
12V IGN
SP GND STUD
SPEEDOMETER
SIG +
TB2-9 (DASH LGTS.)
J1587
J1939
(SIDE ELECT. PANEL)
EXHAUST BRAKE
+12V SW. IGN.
HARNESS - 62202349
Thomas BUILT BUSES
62202738 B
WTEC III NON RETARDER, BUSSMAN VIM
Effective Until: 09/04/98

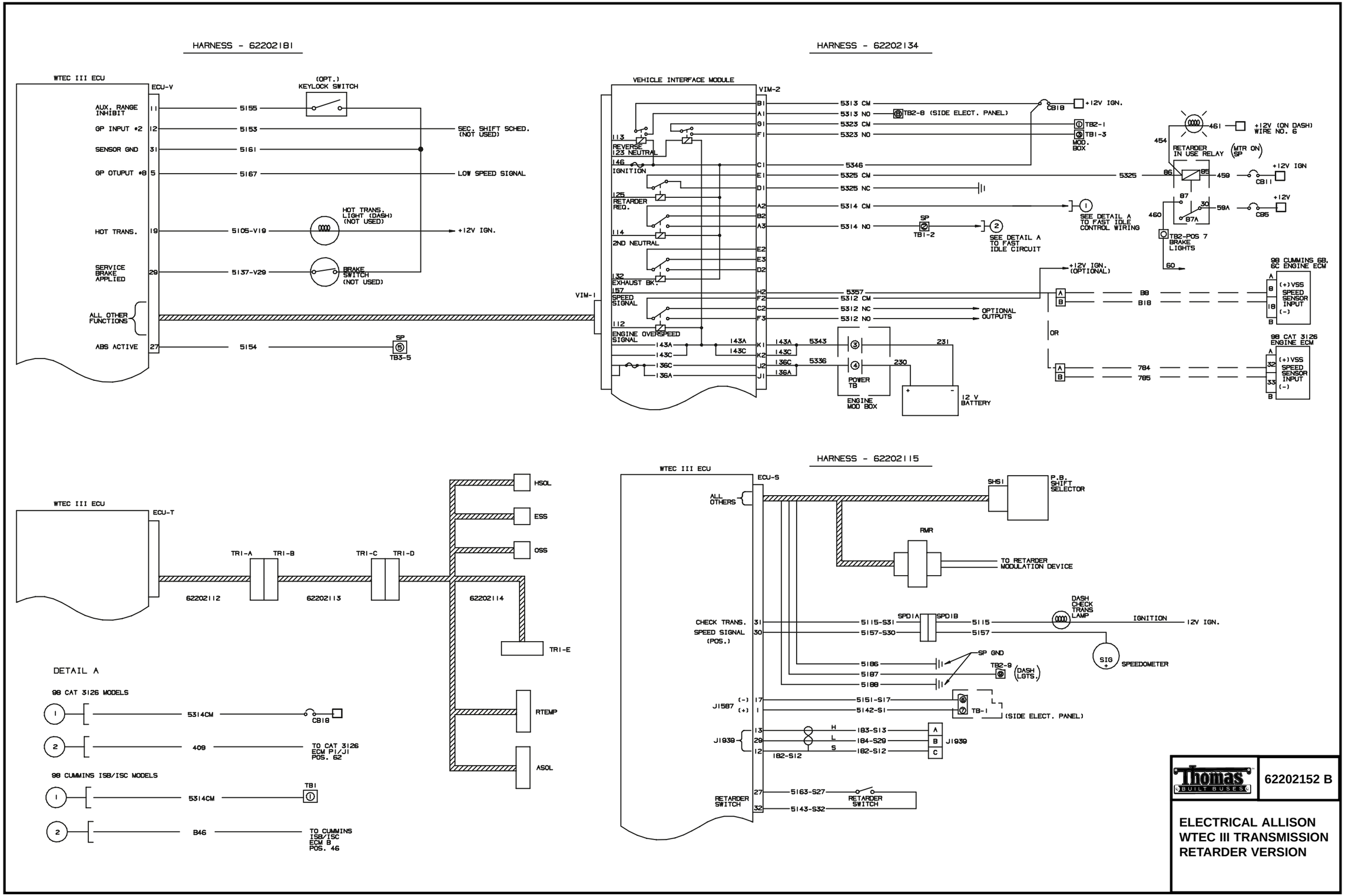
HARNESS - 62202181
WTEC III ECU
ECU-V
AUX. RANGE INHIBIT
GP INPUT #2
SENSOR GND
GP OTUPUT #8
HOT TRANS.
SERVICE BRAKE APPLIED
ALL OTHER FUNCTIONS
ABS ACTIVE
(OPT.) KEYLOCK SWITCH
5155
5153
5161
5167
SEC. SHIFT SCHED. (NOT USED)
LOW SPEED SIGNAL
HOT TRANS. LIGHT (DASH) (NOT USED)
5105-V19
+12V IGN.
5137-V29
BRAKE SWITCH (NOT USED)
5154
SP
TB3-5
HARNESS - 62202134
VEHICLE INTERFACE MODULE
VIM-2
VIM-1
REVERSE 123 NEUTRAL
IGNITION
RETARDER REQ.
2ND NEUTRAL
EXHAUST BK.
SPEED SIGNAL
ENGINE OVERSPEED SIGNAL
5313 CM
5313 NO
5323 CM
5323 NO
TB2-8 (SIDE ELECT. PANEL)
CB18
+12V IGN.
TB2-1
TB1-3
MOD. BOX
5346
5325 CM
5325 NC
5314 CM
5314 NO
SP
TB1-2
SEE DETAIL A TO FAST IDLE CONTROL WIRING
SEE DETAIL A TO FAST IDLE CIRCUIT
5357
5312 CM
5312 NC
5312 NO
OPTIONAL OUTPUTS
+12V IGN. (OPTIONAL)
143A
143C
136C
136A
5343
5336
POWER TB
ENGINE MOD BOX
231
230
12 V BATTERY
RETARDER IN USE RELAY
(MTR ON) SP
461
+12V (ON DASH) WIRE NO. 6
454
459
+12V IGN
CB11
460
59A
+12V
CB5
TB2-POS 7 BRAKE LIGHTS
60
OR
98 CUMMINS 6B, 6C ENGINE ECM
(+)VSS SPEED SENSOR INPUT (-)
98 CAT 3126 ENGINE ECM
784
785
HARNESS - 62202112
WTEC III ECU
ECU-T
TRI-A
TRI-B
TRI-C
TRI-D
62202112
62202113
62202114
HSOL
ESS
OSS
TRI-E
RTEMP
ASOL
DETAIL A
98 CAT 3126 MODELS
5314CM
CB18
409
TO CAT 3126 ECM P1/J1 POS. 62
98 CUMMINS ISB/ISC MODELS
TB1
B46
TO CUMMINS ISB/ISC ECM B POS. 46
HARNESS - 62202115
WTEC III ECU
ECU-S
ALL OTHERS
SHS1
P.B. SHIFT SELECTOR
RMR
TO RETARDER MODULATION DEVICE
CHECK TRANS.
SPEED SIGNAL (POS.)
5115-S31
5157-S30
SPD1A
SPD1B
5115
5157
DASH CHECK TRANS LAMP
IGNITION
12V IGN.
SIG
SPEEDOMETER
SP GND
TB2-9
(DASH LGTS.)
5186
5187
5188
J1587
5151-S17
5142-S1
TB-1
(SIDE ELECT. PANEL)
J1939
183-S13
184-S29
182-S12
RETARDER SWITCH
5163-S27
5143-S32
Thomas BUILT BUSES
62202152 B
ELECTRICAL ALLISON WTEC III TRANSMISSION RETARDER VERSION

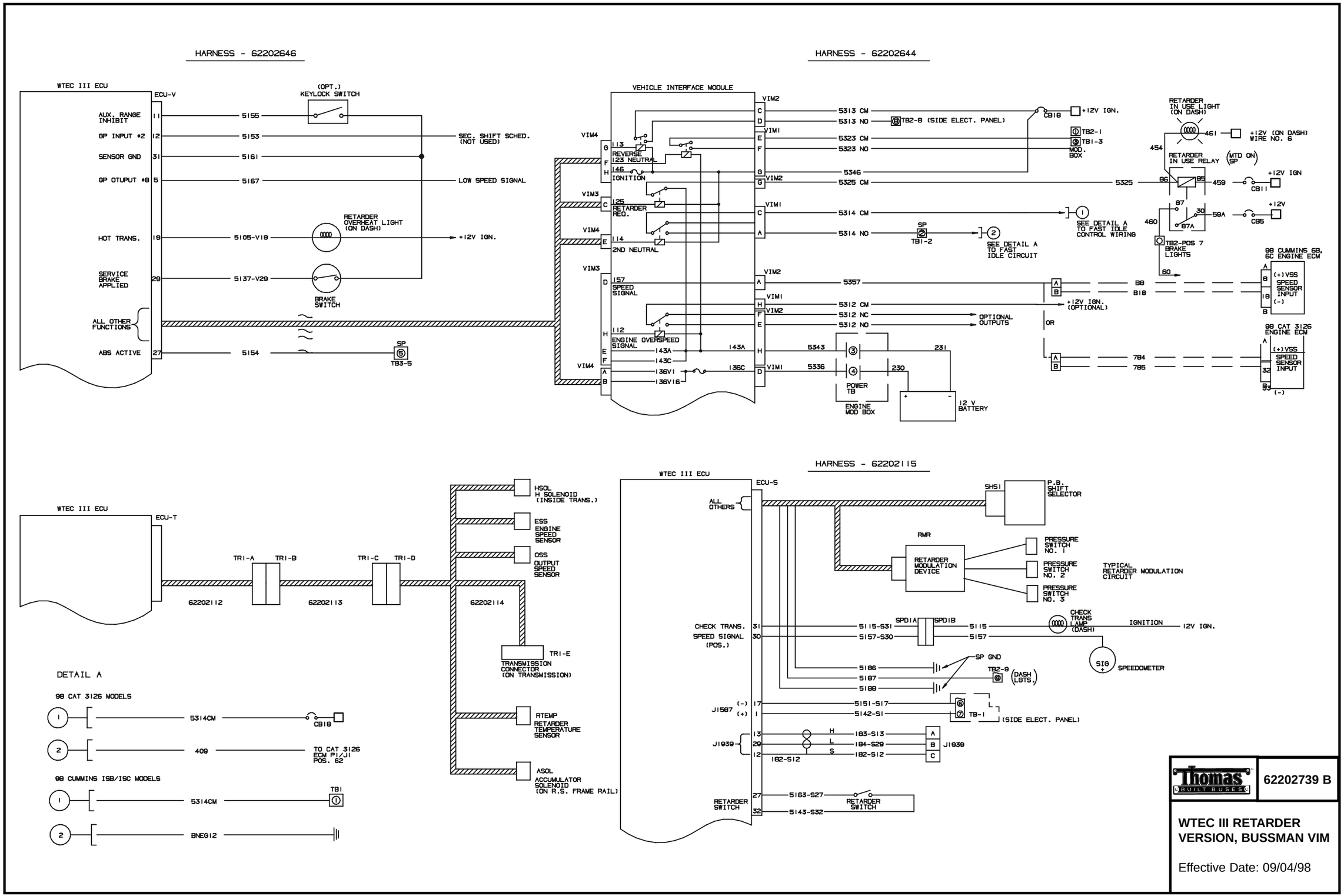
HARNESS - 62202646
WTEC III ECU
ECU-V
AUX. RANGE INHIBIT
GP INPUT #2
SENSOR GND
GP OTUPUT #8
HOT TRANS.
SERVICE BRAKE APPLIED
ALL OTHER FUNCTIONS
ABS ACTIVE
(OPT.) KEYLOCK SWITCH
5155
5153
5161
5167
5105-V19
5137-V29
5154
SEC. SHIFT SCHED. (NOT USED)
LOW SPEED SIGNAL
RETARDER OVERHEAT LIGHT (ON DASH)
+12V IGN.
BRAKE SWITCH
SP
TB3-5
HARNESS - 62202644
VEHICLE INTERFACE MODULE
REVERSE
123 NEUTRAL
IGNITION
RETARDER REQ.
2ND NEUTRAL
SPEED SIGNAL
ENGINE OVERSPEED SIGNAL
5313 CM
5313 NO
TB2-8 (SIDE ELECT. PANEL)
5323 CM
5323 NO
5346
5325 CM
5314 CM
5314 NO
TB1-2
SEE DETAIL A TO FAST IDLE CONTROL WIRING
SEE DETAIL A TO FAST IDLE CIRCUIT
CB18
+12V IGN.
TB2-1
TB1-3
MOD. BOX
RETARDER IN USE LIGHT (ON DASH)
+12V (ON DASH) WIRE NO. 6
RETARDER IN USE RELAY
(MTD ON) (SP)
+12V IGN
CB11
+12V
CB5
TB2-POS 7 BRAKE LIGHTS
98 CUMMINS 6B, 6C ENGINE ECM
(+)VSS
SPEED SENSOR INPUT
(-)
5357
5312 CM
5312 NC
5312 NO
+12V IGN. (OPTIONAL)
OPTIONAL OUTPUTS
OR
98 CAT 3126 ENGINE ECM
5343
5336
POWER TB
ENGINE MOD BOX
12 V BATTERY
HARNESS - 62202115
WTEC III ECU
ECU-T
TRI-A
TRI-B
TRI-C
TRI-D
62202112
62202113
62202114
HSOL H SOLENOID (INSIDE TRANS.)
ESS ENGINE SPEED SENSOR
OSS OUTPUT SPEED SENSOR
TRI-E TRANSMISSION CONNECTOR (ON TRANSMISSION)
RTEMP RETARDER TEMPERATURE SENSOR
ASOL ACCUMULATOR SOLENOID (ON R.S. FRAME RAIL)
DETAIL A
98 CAT 3126 MODELS
5314CM
CB18
409
TO CAT 3126 ECM P1/J1 POS. 62
98 CUMMINS ISB/ISC MODELS
TB1
BNEG12
ECU-S
ALL OTHERS
SHS1
P.B. SHIFT SELECTOR
RMR
RETARDER MODULATION DEVICE
PRESSURE SWITCH NO. 1
PRESSURE SWITCH NO. 2
PRESSURE SWITCH NO. 3
TYPICAL RETARDER MODULATION CIRCUIT
CHECK TRANS.
SPEED SIGNAL (POS.)
5115-S31
5157-S30
SPD1A
SPD1B
5115
5157
CHECK TRANS LAMP (DASH)
IGNITION
12V IGN.
SIG
SPEEDOMETER
SP GND
5186
5187
5188
TB2-9
(DASH LGTS.)
J1587
5151-S17
5142-S1
TB-1
(SIDE ELECT. PANEL)
J1939
183-S13
184-S29
182-S12
RETARDER SWITCH
5163-S27
5143-S32
Thomas BUILT BUSES
62202739 B
WTEC III RETARDER VERSION, BUSSMAN VIM
Effective Date: 09/04/98

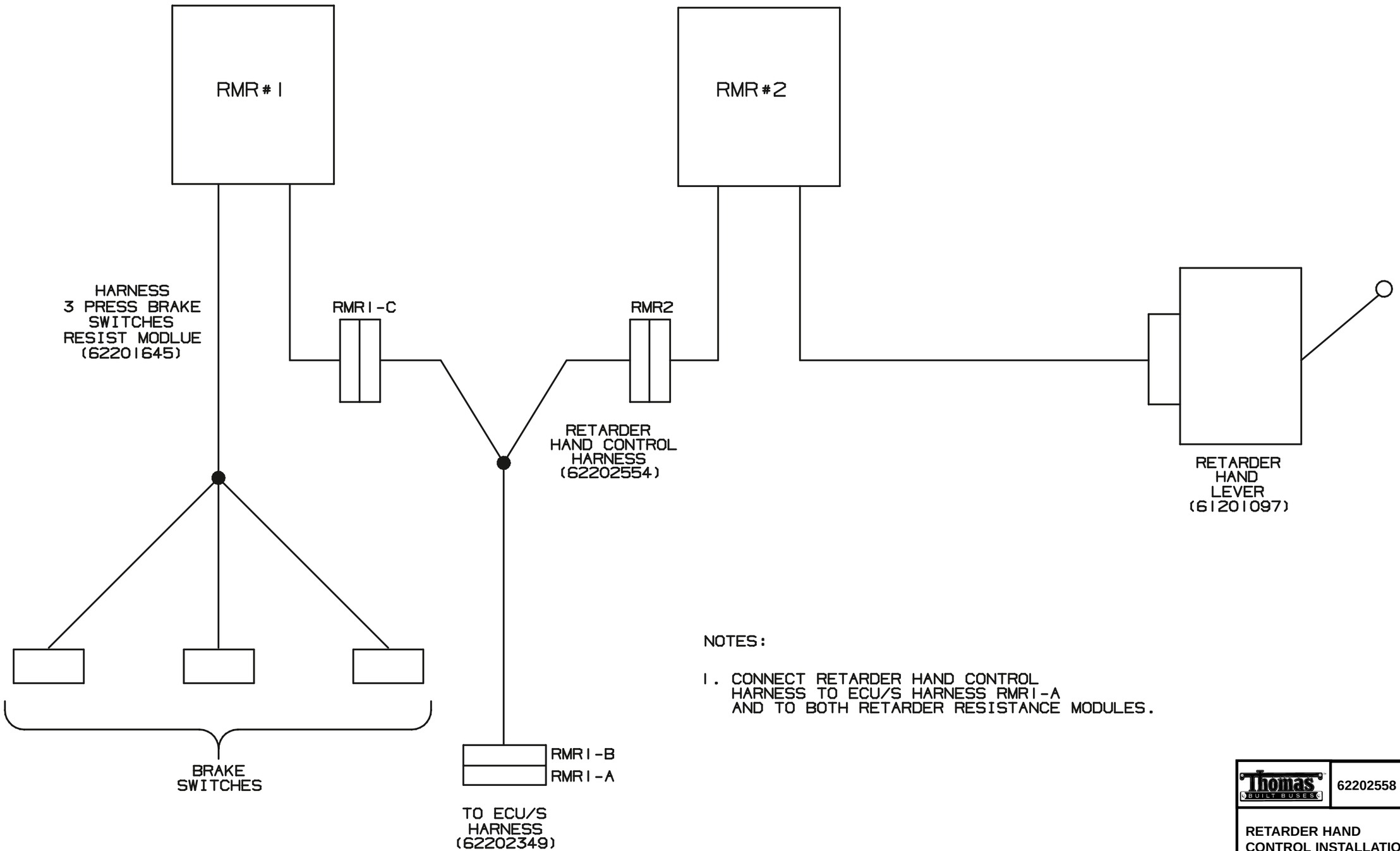

NOTES:

1. CONNECT RETARDER HAND CONTROL HARNESS TO ECU/S HARNESS RMR1-A AND TO BOTH RETARDER RESISTANCE MODULES.

Thomas BUILT BUSES

62202558 A

RETARDER HAND CONTROL INSTALLATION, WTEC III

Effective Date: 03/17/98

NOTES:

MVP-ER
BRAKE
SCHEMATICS

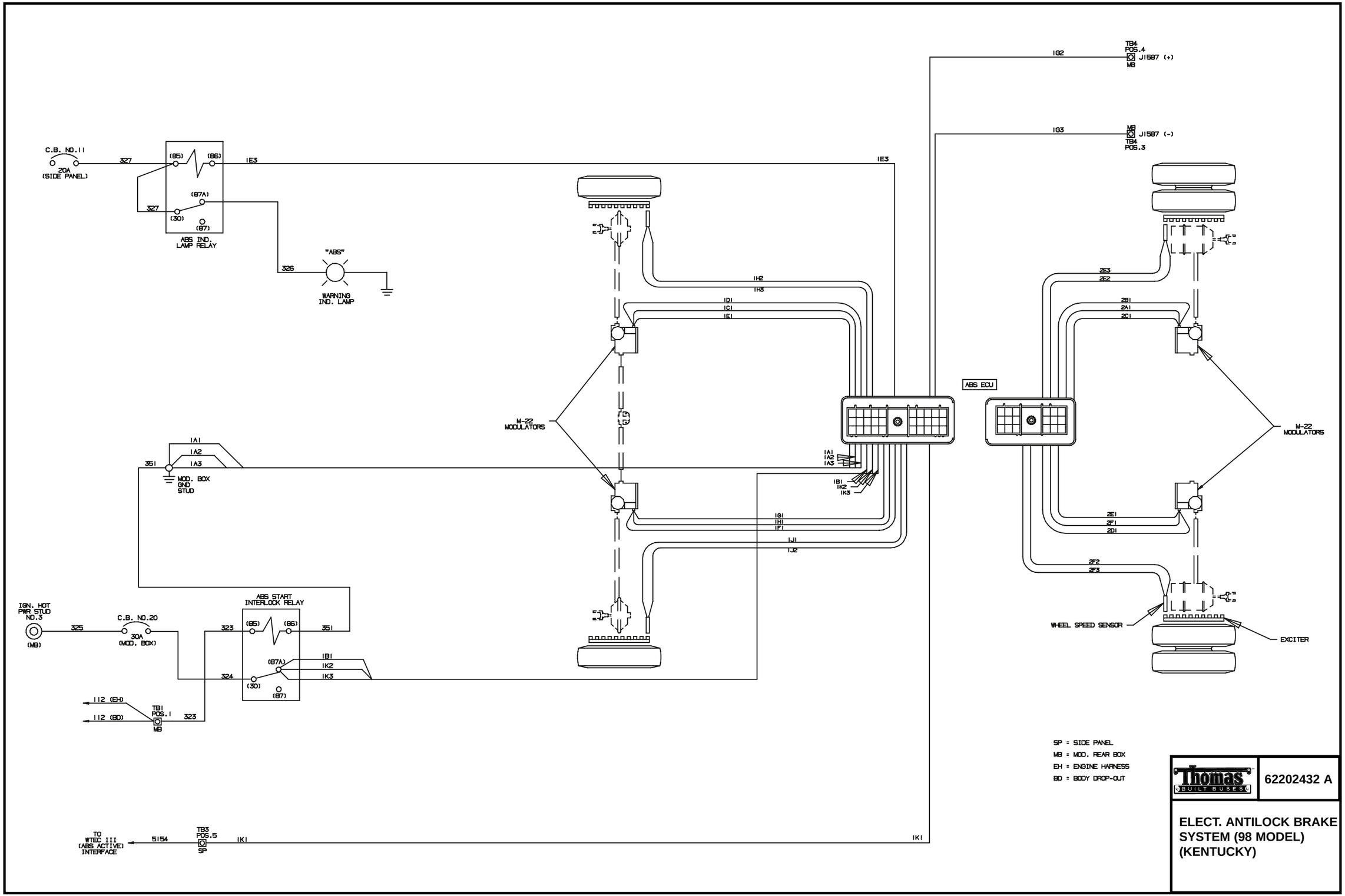
C.B. NO.11
20A
(SIDE PANEL)
327
(85)
(86)
1E3
(87A)
(30)
(87)
ABS IND. LAMP RELAY
326
"ABS"
WARNING IND. LAMP
1G2
TB4 POS.4
J1587 (+)
MB
1G3
J1587 (-)
TB4 POS.3
1H2
1H3
1D1
1C1
1E1
2E3
2E2
2B1
2A1
2C1
ABS ECU
M-22 MODULATORS
1A1
1A2
1A3
351
MOD. BOX GND STUD
1B1
1K2
1K3
1G1
1H1
1F1
1J1
1J2
2E1
2F1
2D1
2F2
2F3
WHEEL SPEED SENSOR
EXCITER
IGN. HOT PWR STUD NO.3
(MB)
325
C.B. NO.20
30A
(MOD. BOX)
323
ABS START INTERLOCK RELAY
324
112 (EH)
112 (BD)
TB1 POS.1
TO WTEC III (ABS ACTIVE) INTERFACE
5154
TB3 POS.5
SP
1K1
SP = SIDE PANEL
MB = MOD. REAR BOX
EH = ENGINE HARNESS
BD = BODY DROP-OUT
Thomas BUILT BUSES
62202432 A
ELECT. ANTILOCK BRAKE SYSTEM (98 MODEL) (KENTUCKY)

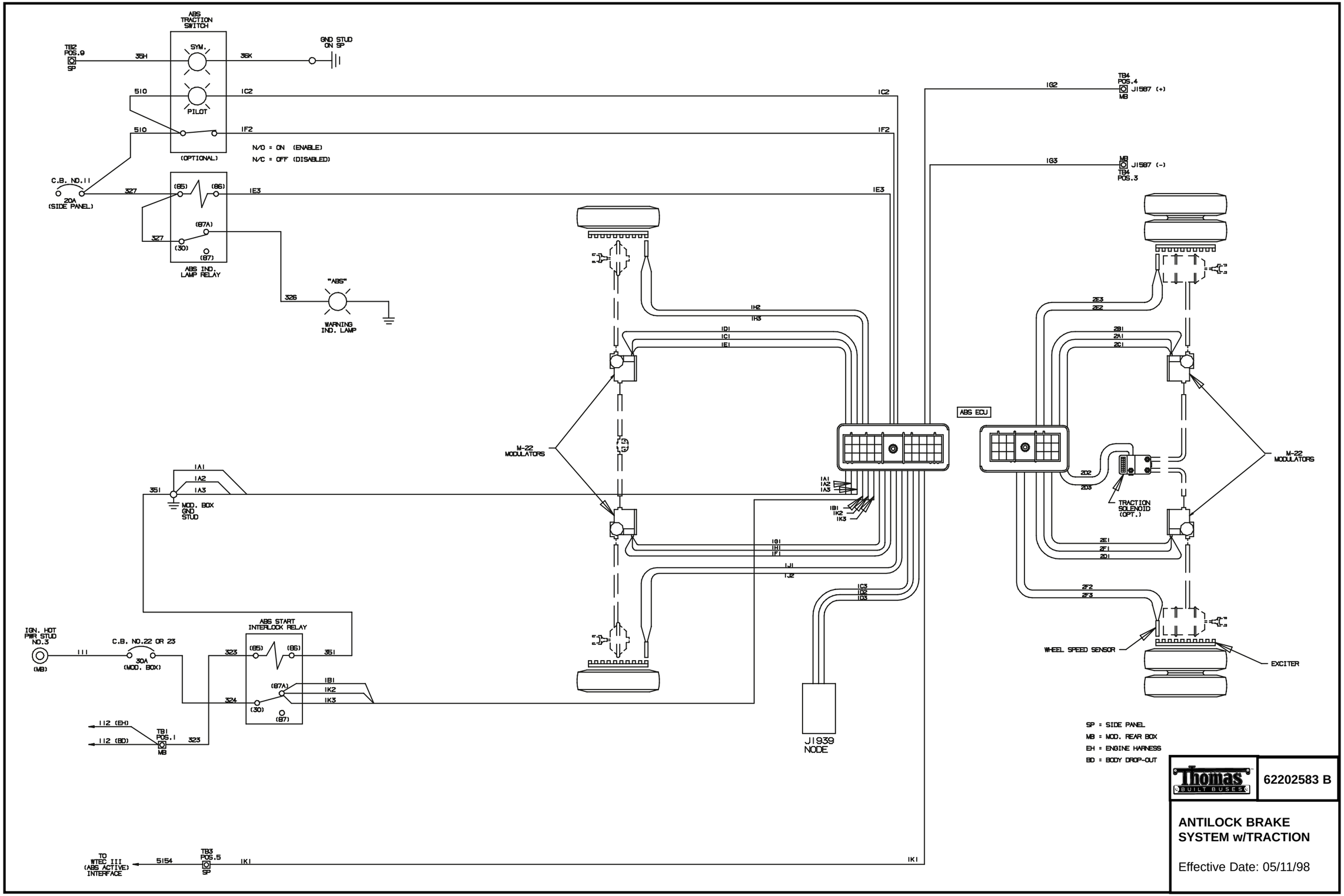
ABS TRACTION SWITCH
SYM.
PILOT
(OPTIONAL)
TB2 POS.9 SP
35H
35K
GND STUD ON SP
510
1C2
1F2
N/O = ON (ENABLE)
N/C = OFF (DISABLED)
C.B. NO.11
20A (SIDE PANEL)
327
(85)
(86)
1E3
(87A)
(30)
(87)
ABS IND. LAMP RELAY
326
"ABS"
WARNING IND. LAMP
1G2
TB4 POS.4 M8 J1587 (+)
1G3
M8 TB4 POS.3 J1587 (-)
1H2
1H3
1D1
1C1
1E1
ABS ECU
M-22 MODULATORS
1G1
1A1
1A2
1A3
351
MOD. BOX GND STUD
1B1
1K2
1K3
1B1
1H1
1F1
1J1
1J2
1C3
1D2
1D3
2E3
2E2
2B1
2A1
2C1
2D2
2D3
TRACTION SOLENOID (OPT.)
2E1
2F1
2D1
2F2
2F3
WHEEL SPEED SENSOR
EXCITER
IGN. HOT PWR STUD NO.3
(MB)
111
C.B. NO.22 OR 23
30A (MOD. BOX)
ABS START INTERLOCK RELAY
323
324
112 (EH)
112 (BD)
TB1 POS.1 MB
J1939 NODE
SP = SIDE PANEL
MB = MOD. REAR BOX
EH = ENGINE HARNESS
BD = BODY DROP-OUT
TO WTEC III (ABS ACTIVE) INTERFACE
5154
TB3 POS.5 SP
1K1
Thomas BUILT BUSES
62202583 B
ANTILOCK BRAKE SYSTEM w/TRACTION
Effective Date: 05/11/98

QTY.	PART NO.	DESCRIPTION	ITEM
1	61201163	SWITCH, EXHAUST BRAKE	1
1	62201329	HARNESS	2
1	61200817	FUSE, 3 AMP	3
1	61200316	FUSEHOLDER, INLINE	4
1	61200174	RING, TERMINAL, #10 STUD, 14 AWG.	5
1	61200168	BUTT SPLICE, 14 AWG.	6

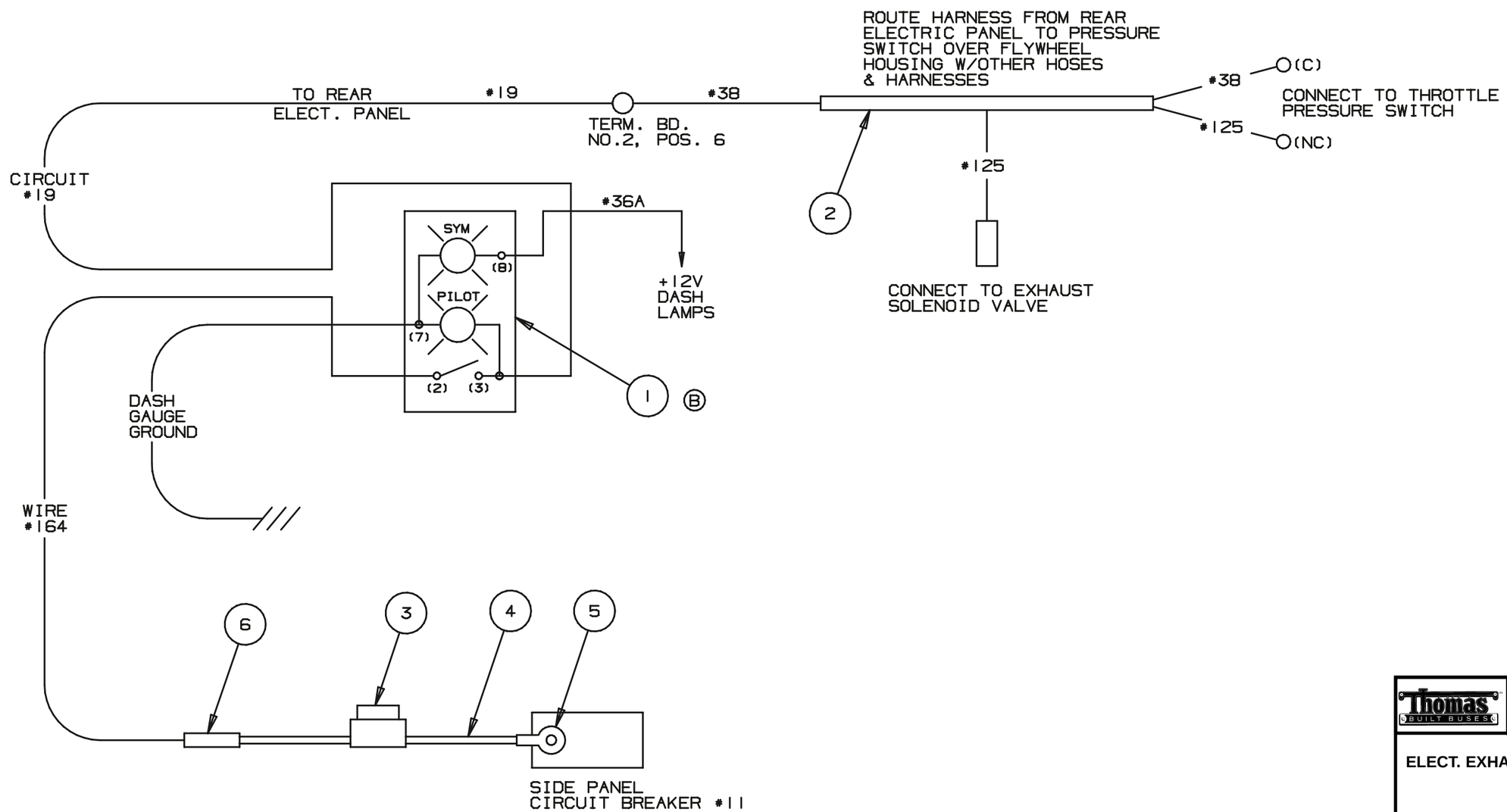

Thomas BUILT BUSES

62201564 B

ELECT. EXHAUST BRAKE

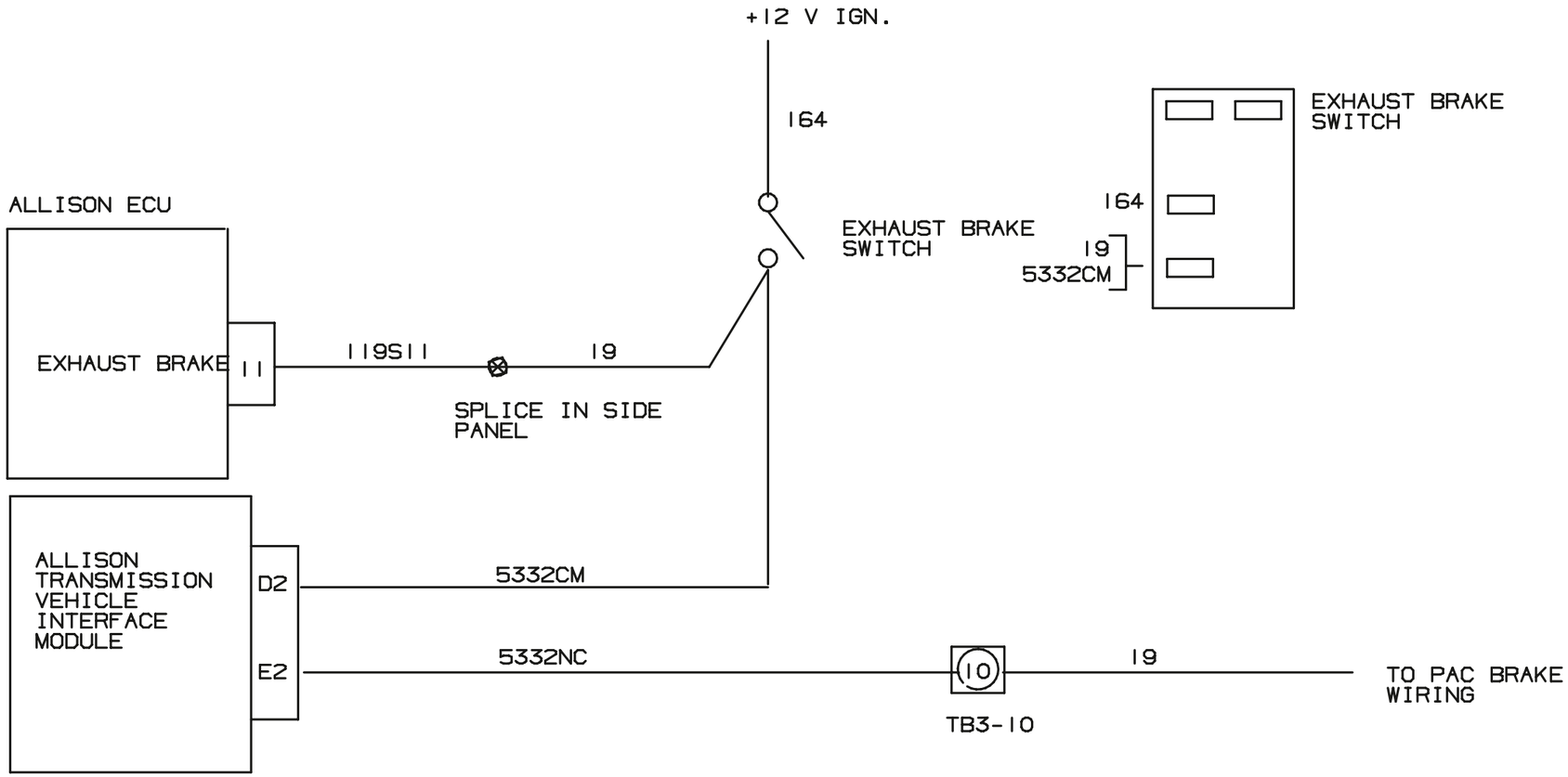

WIRING INSTRUCTIONS:
1. CUT BUTT SPLICE FROM WIRE 5332CM AND FEMALE PUSH-ON FROM WIRE 19 AT EXHAUST BRAKE SWITCH.
2. CONNECT WIRE 5332CM AND WIRE 19 AT DASH USING FEMALE .25" PUSH-ON TERMINAL.
3. REMOVE WIRE 19 GOING TO DASH FROM TERMINAL BOARD AT THE SIDE PANEL
4. SPLICE WIRE 119 AND WIRE 19 TOGETHER AT SIDE PANEL
5. CONNECT WIRE 5332NC TO WIRE 19 IN MAIN HARNESS AT TERMINAL BOARD.

TESTING INSTRUCTIONS:
1. ACCELERATE VEHICLE TO 25 MPH OR ABOVE.
2. TURN EXHAUST BRAKE SWITCH INTO THE ON POSITION.
3. RELEASE THROTTLE AND VERIFY EXHAUST BRAKE COMES ON. (NOTE: EXHAUST BRAKE WILL ONLY OPERATE IN 2ND GEAR OR ABOVE WITH THROTTLE RELEASED.)

Thomas BUILT BUSES

62202713 A

EXHAUST BRAKE WITH WTEC III TRANSMISSION

Effective Date: 07/27/98

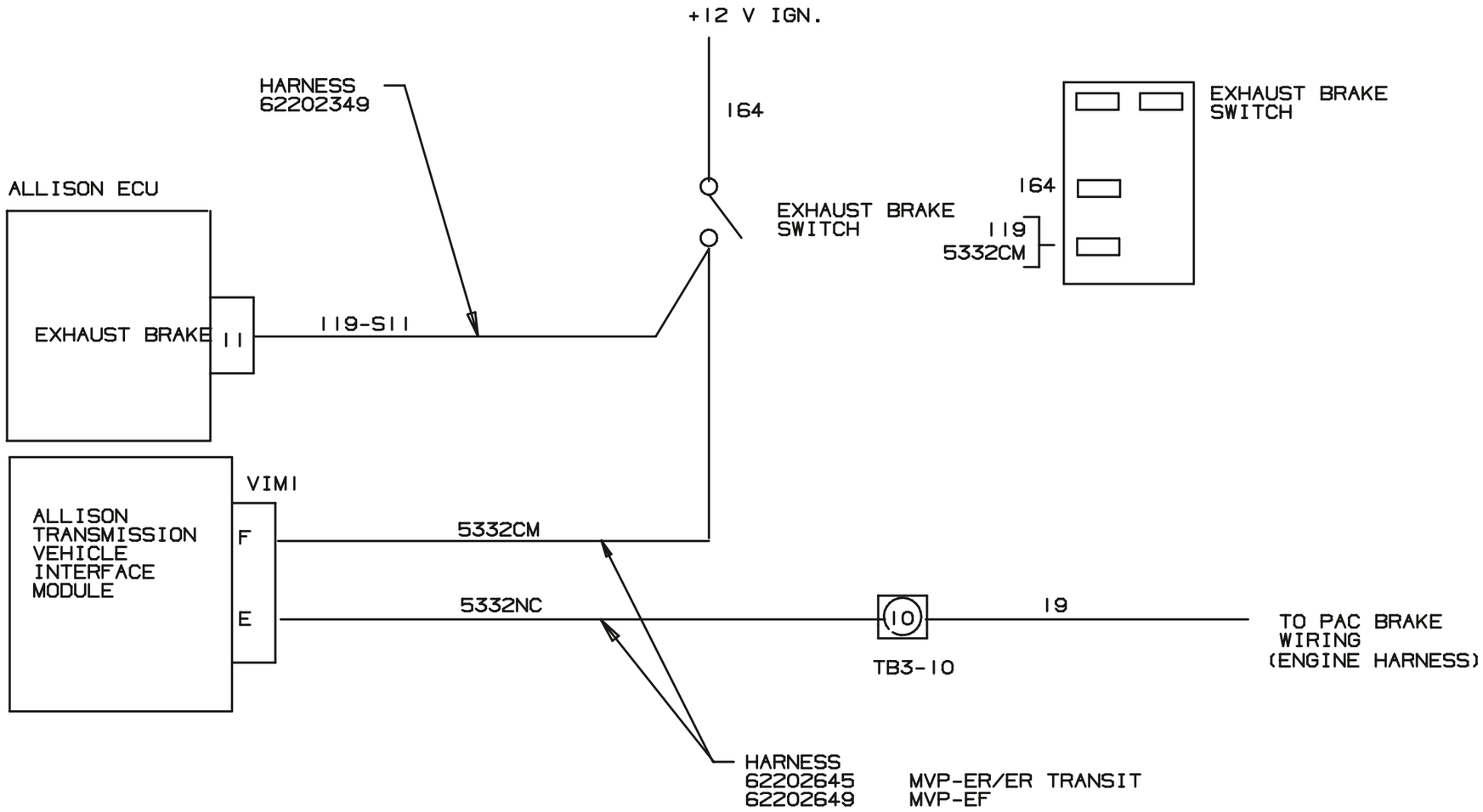

WIRING INSTRUCTIONS:
1. CONNECT 119-S11 AND 5332CM AT EXHAUST BRAKE SWITCH
2. REMOVE WIRE 19 GOING TO DASH FROM TB3 POS.10.
3. CONNECT WIRE 5332NC PER DWG.

TESTING INSTRUCTIONS:
1. ACCELERATE VEHICLE TO 25 MPH OR ABOVE.
2. TURN EXHAUST BRAKE SWITCH INTO THE ON POSITION.
3. RELEASE THROTTLE AND VERIFY EXHAUST BRAKE COMES ON. (NOTE: EXHAUST BRAKE WILL ONLY OPERATE IN 2ND GEAR OR ABOVE WITH THROTTLE RELEASED.)

Thomas BUILT BUSES

62202734 A

EXHAUST BRAKE w/BUSSMAN REV. WTEC III TRANSMISSION

Effective Date: 09/04/98

MVP-ER
SPEEDOMETER
SCHEMATICS

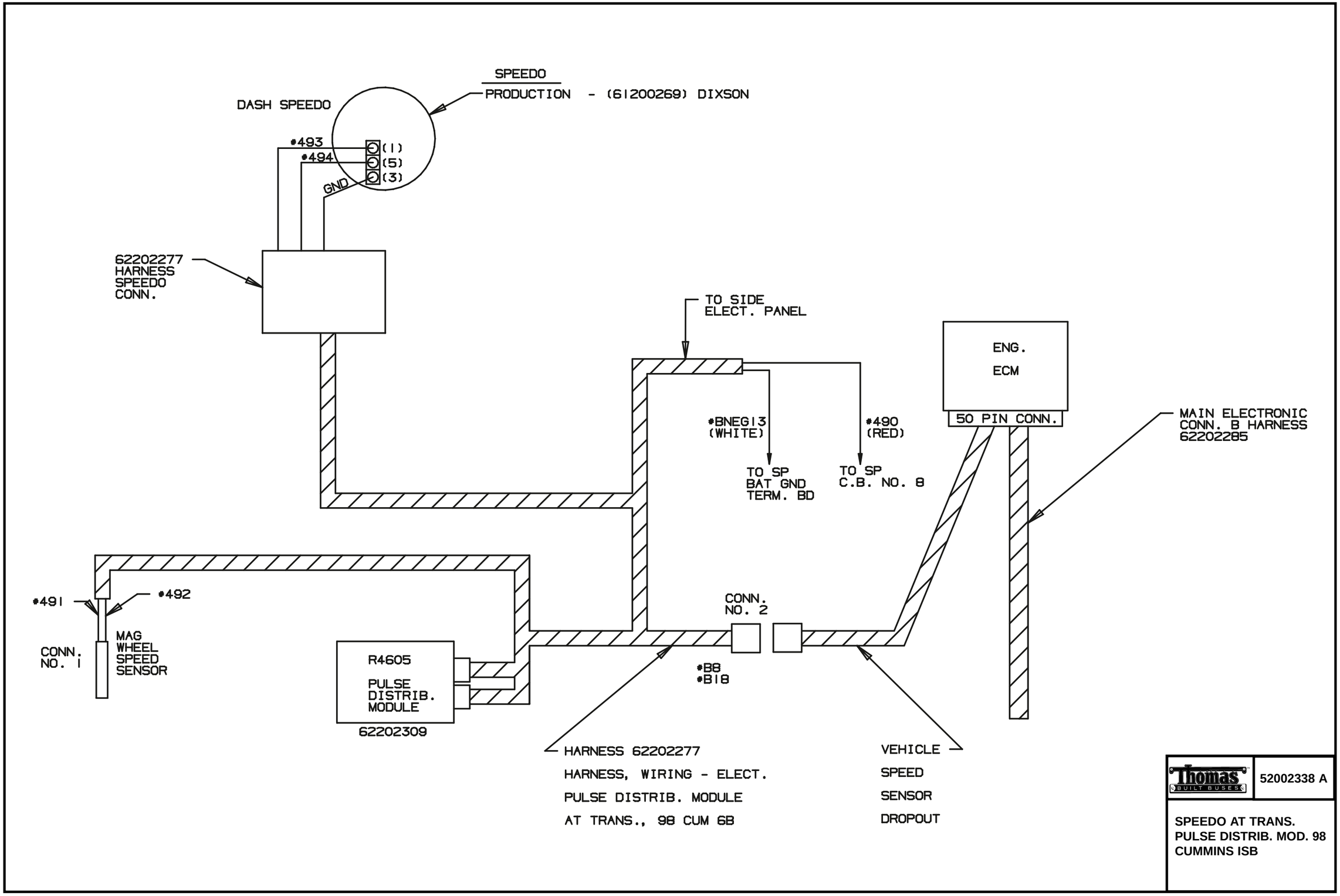
SPEEDO
PRODUCTION - (61200269) DIXSON
DASH SPEEDO
#493
#494
GND
(1)
(5)
(3)
62202277
HARNESS
SPEEDO
CONN.
TO SIDE
ELECT. PANEL
ENG.
ECM
50 PIN CONN.
#BNEG13
(WHITE)
#490
(RED)
TO SP
BAT GND
TERM. BD
TO SP
C.B. NO. 8
MAIN ELECTRONIC
CONN. B HARNESS
62202285
#491
#492
CONN.
NO. 1
MAG
WHEEL
SPEED
SENSOR
R4605
PULSE
DISTRIB.
MODULE
62202309
CONN.
NO. 2
#B8
#B18
HARNESS 62202277
HARNESS, WIRING - ELECT.
PULSE DISTRIB. MODULE
AT TRANS., 98 CUM 6B
VEHICLE
SPEED
SENSOR
DROPOUT
Thomas
BUILT BUSES
52002338 A
SPEEDO AT TRANS.
PULSE DISTRIB. MOD. 98
CUMMINS ISB

MVP-ER
LIGHTS
SCHEMATICS

CANADIAN DRL PARTS LIST			
ITEM	QTY.	PART NO.	DESCRIPTION
1	1	62200780	DIODE ASSEMBLY - ANTI-FEEDBACK
2	3	61200709	RELAY - CONTROL
3	1	61200105	BREAKER - CIRCUIT 35 AMP

CIRCUIT #	AWG	COLOR	DESCRIPTION
258	14	BROWN/WHITE	C.B. #11 (LOAD) TO DRL TAIL LIGHT RELAY CONTACT TERM. 87A
259	14	YELLOW	C.B. #11 (LOAD) TO DRL HEADLIGHT DIODE
260	14	YELLOW/WHITE	DRL HEADLIGHT DIODE TO DRL HEADLIGHT RELAY CONTACT TERM. 87A
262	14	BROWN	DRL TAILLIGHT RELAY CONTACT TERM. 30 TO TAILLIGHT SERVICE TERM.
263	14	BROWN	C.B. #11 (LOAD) TO DRL PARKLIGHT RELAY CONTACT TERM. 87A
264	14	BROWN/WHITE	DRL PARKLIGHT RELAY CONTACT TERM. 30 TO PARKLIGHT SERVICE TERM.
265	14	BROWN	HEADLIGHT SW. (T) TO DRL TAILLIGHT RELAY COIL TERM. 85
266	14	BROWN/WHITE	HEADLIGHT SW. (P) TO DRL PARKLIGHT RELAY COIL TERM. 85
267	14	YELLOW	HEADLIGHT SW. (H) TO DRL HEADLIGHT RELAY COIL TERM. 85
JUMPER	14	BLACK	DRL HEADLIGHT RELAY 87 TO HI-BEAM HEADLIGHT RELAY 87A

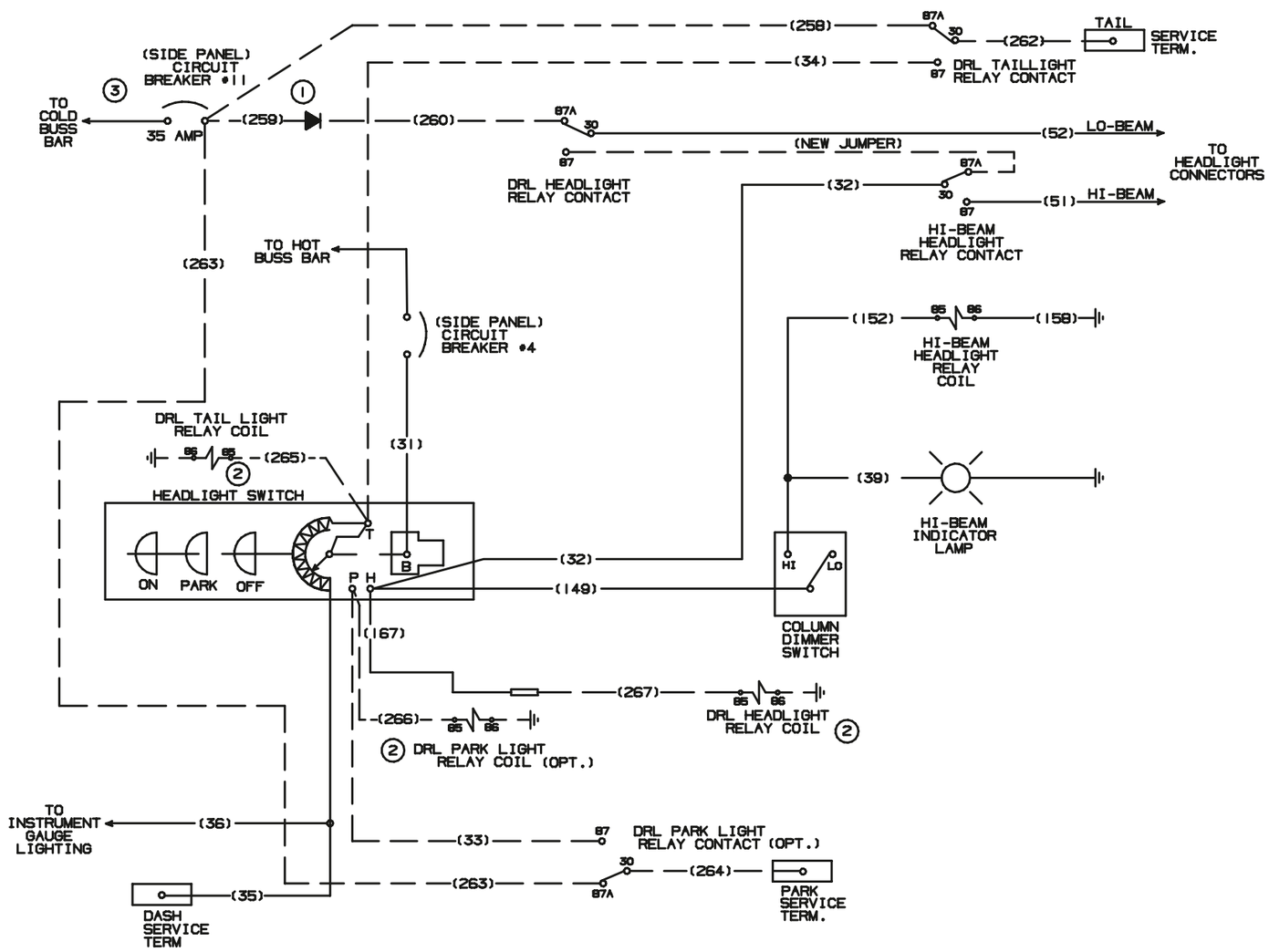

LEGEND

DRL - DAYTIME RUNNING LIGHTS

EXISTING WIRING

NEW OR REVISED WIRING

Thomas BUILT BUSES

62201555 B

HEADLIGHTS DAYTIME RUNNING LIGHTS STD. SWITCH HIGH WATTAGE HEADLIGHTS (LWP)

CANADIAN DRL PARTS LIST		
ITEM	PART NO.	DESCRIPTION
1	62200780	DIODE ASSEMBLY-ANTI-FEEDBACK
2	61200709	RELAY-CONTROL
3	61200105	BREAKER-CIRCUIT, 35 AMP

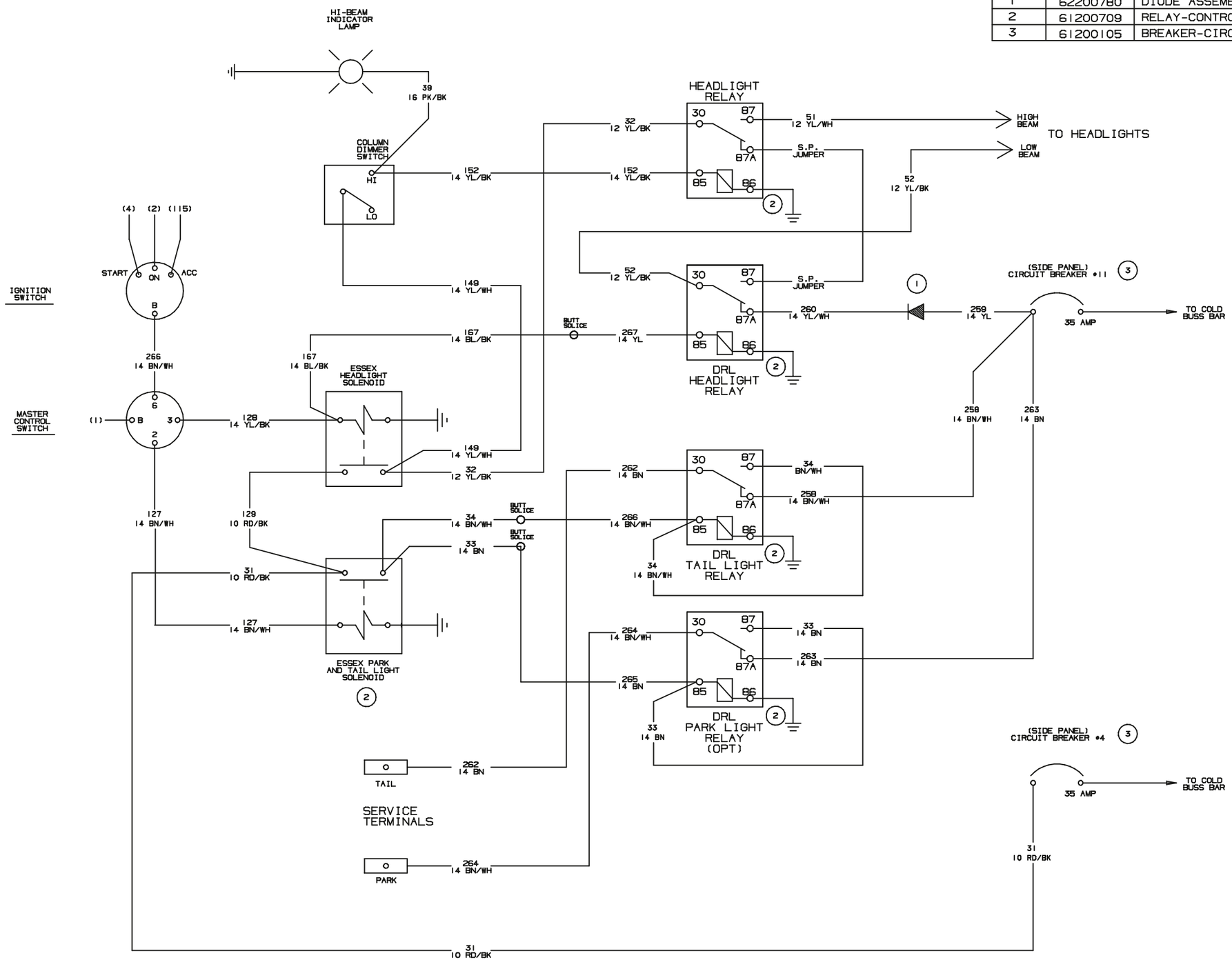

Thomas BUILT BUSES

62201896 A

DAYTIME RUNNING LIGHTS w/OPT. C3675 MASTER CONTROL SWITCH

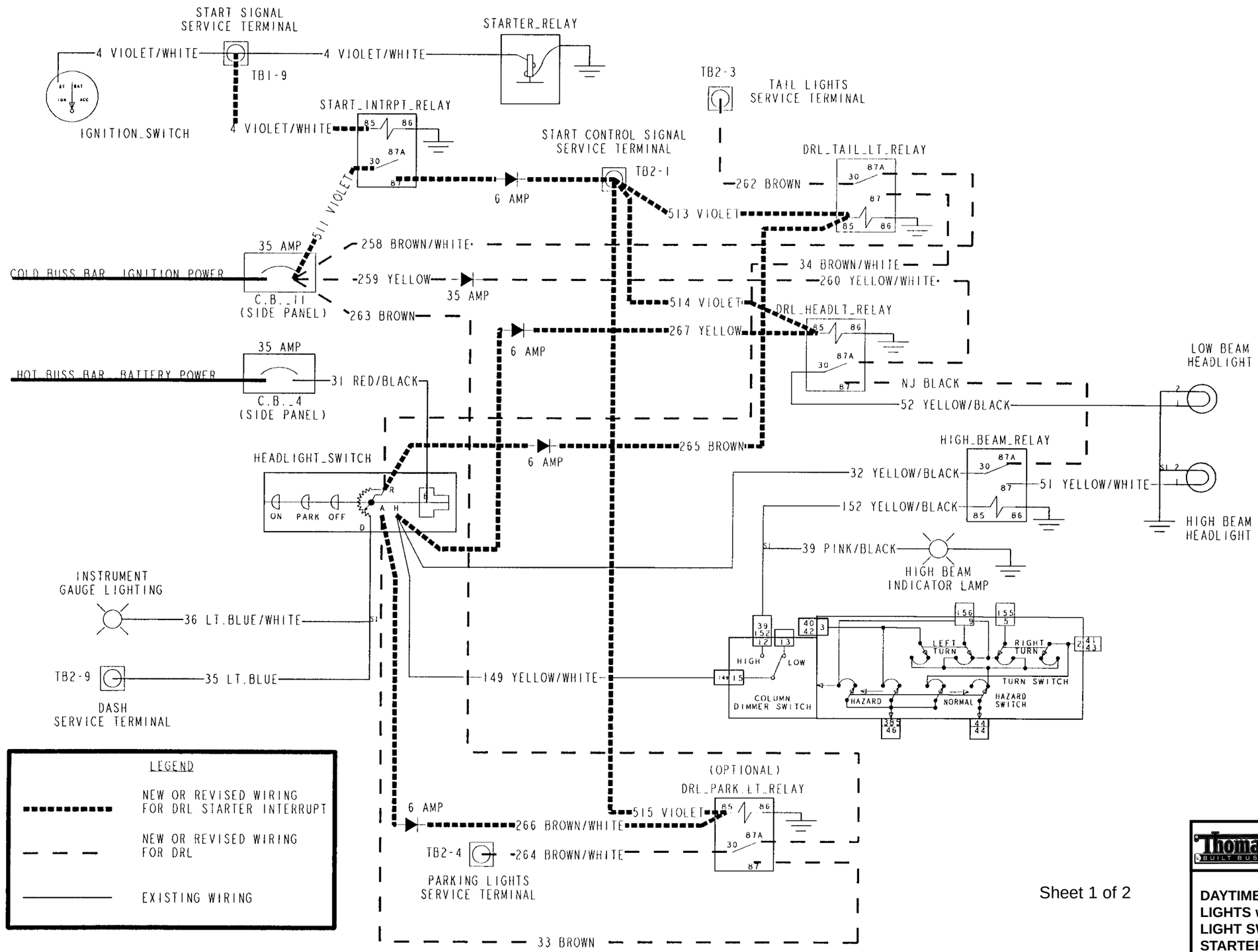

Sheet 1 of 2

Thomas BUILT BUSES

62202511 A

DAYTIME RUNNING LIGHTS w/STD. HEAD-LIGHT SWITCH & STARTER INTERRUPT

Effective Date: 03/06/98

CIRCUIT NUMBER	FROM		TO		WIRE COLOR
	COMPONENT	PIN	COMPONENT	PIN	
4	IGNITION_SWITCH	CONN3	START_SGNL_TERMINAL	POWER	VIOLET/WHITE
4	START_SGNL_TERMINAL	POWER	STARTER_RELAY	COIL	VIOLET/WHITE
4	START_SGNL_TERMINAL	POWER	START_INTRPT_RELAY	COIL_CONN1	VIOLET/WHITE
31	C.B._4	CONN2	HEADLIGHT_SWITCH	B_CONN1_BAT	RED/BLACK
32	HEADLIGHT_SWITCH	H_CONN3_HDLGT	HIGH_BEAM_RELAY	CONTACT_COM	YELLOW/BLACK
33	HEADLIGHT_SWITCH	A_CONN4_PARK	DRL_PARK_LT_RELAY	CONTACT_NO	BROWN
34	HEADLIGHT_SWITCH	R_CONN2_TAIL	DRL_TAIL_LT_RELAY	CONTACT_NO	BROWN/WHITE
35	HEADLIGHT_SWITCH	D_CONN5_DASH	DASH_TERMINAL	POWER	LT.BLUE
36	INST_GAUGE_LIGHTS	CONN4	SPLICE_1	S1	LT.BLUE/WHITE
39	SPLICE_2	S1	HIGH_BEAM_IND	CONN2	PINK/BLACK
51	HIGH_BEAM_RELAY	CONTACT_NO	LOW_BEAM_HEADLIGHT	1	YELLOW/WHITE
52	DRL_HEADLT_RELAY	CONTACT_COM	HIGH_BEAM_HEADLIGHT	1	YELLOW/BLACK
149	HEADLIGHT_SWITCH	H_CONN3_HDLGT	COLUMN_SWITCH	DIM_IN_149	YELLOW/WHITE
152	COLUMN_SWITCH	DIM_HIGH_152	HIGH_BEAM_RELAY	COIL_CONN1	YELLOW/BLACK
258	C.B._11	CONN2	DRL_TAIL_LT_RELAY	CONTACT_NC	BROWN/WHITE
259	C.B._11	CONN2	DIODE_2	ANODE	YELLOW
260	DIODE_2	CATHODE	DRL_HEADLT_RELAY	CONTACT_NC	YELLOW/WHITE
262	TAIL_LIGHTS_TERMINAL	POWER	DRL_TAIL_LT_RELAY	CONTACT_COM	BROWN
263	C.B._11	CONN2	DRL_PARK_LT_RELAY	CONTACT_NC	BROWN
264	PARK_LIGHTS_TERMINAL	POWER	DRL_PARK_LT_RELAY	CONTACT_COM	BROWN/WHITE
265	DIODE_4	CATHODE	DRL_TAIL_LT_RELAY	COIL_CONN1	BROWN
266	DIODE_3	CATHODE	DRL_PARK_LT_RELAY	COIL_CONN1	BROWN/WHITE
267	DIODE_5	CATHODE	DRL_HEADLT_RELAY	COIL_CONN1	YELLOW
511	C.B._11	CONN2	START_INTRPT_RELAY	CONTACT_COM	VIOLET
513	START_CTL_SGNL_TERMINAL	POWER	DRL_TAIL_LT_RELAY	COIL_CONN1	VIOLET
514	START_CTL_SGNL_TERMINAL	POWER	DRL_HEADLT_RELAY	COIL_CONN1	VIOLET
515	START_CTL_SGNL_TERMINAL	POWER	DRL_PARK_LT_RELAY	COIL_CONN1	VIOLET
NJ	HIGH_BEAM_RELAY	CONTACT_NC	DRL_HEADLT_RELAY	CONTACT_NO	BLACK

NOTES:
OPERATION WITH HEADLIGHT SWITCH OFF:
RELAY SUPPLIES +12V TO EACH DRL RELAY COIL DURING START. RELAYS DEFAULT TO OFF FOR DRL OPERATION (FROM IGNITION POWER).
OPERATION WITH HEADLIGHT SWITCH ON:
DRL RELAYS DROP (DRL OFF); HEADLIGHTS, PARKING LIGHTS AND TAIL LIGHTS ARE CONTROLLED FROM HEADLIGHT SWITCH.

(ITEM 4) 6 AMP DIODE ASSEMBLIES ON CIRCUITS 265, 266, AND 267 ARE CONNECTED DIRECTLY TO THE HEADLIGHT SWITCH.

USE (ITEM 5) 6 AMP DIODE ASSEMBLY TO CONNECT STARTER INTERRUPT RELAY, TERMINAL 87 TO START CONTROL SIGNAL SERVICE TERMINAL (TB2-1).

AVOID BUNDLING DIODE ASSEMBLIES TOO TIGHTLY IN ORDER TO ALLOW FOR ADEQUATE HEAT DISSIPATION.

DRL PARTS LIST

ITEM	QTY.	THOMAS PART NUMBER	DESCRIPTION
1	1	62200780	DIODE ASM. - ANTI-FEEDBACK, 35 AMP
2	4	61200709	RELAY - CONTROL
3	1	61200105	BREAKER - CIRCUIT, 35 AMP
4	3	62200633	DIODE ASM. - ANTI-FEEDBACK, 6 AMP
5	1	62202535	DIODE ASM. - ANTI-FEEDBACK, 6 AMP

Sheet 2 of 2

Thomas BUILT BUSES

62202511 A

DAYTIME RUNNING LIGHTS w/STD. HEAD-LIGHT SWITCH & STARTER INTERRUPT
Effective Date: 03/06/98

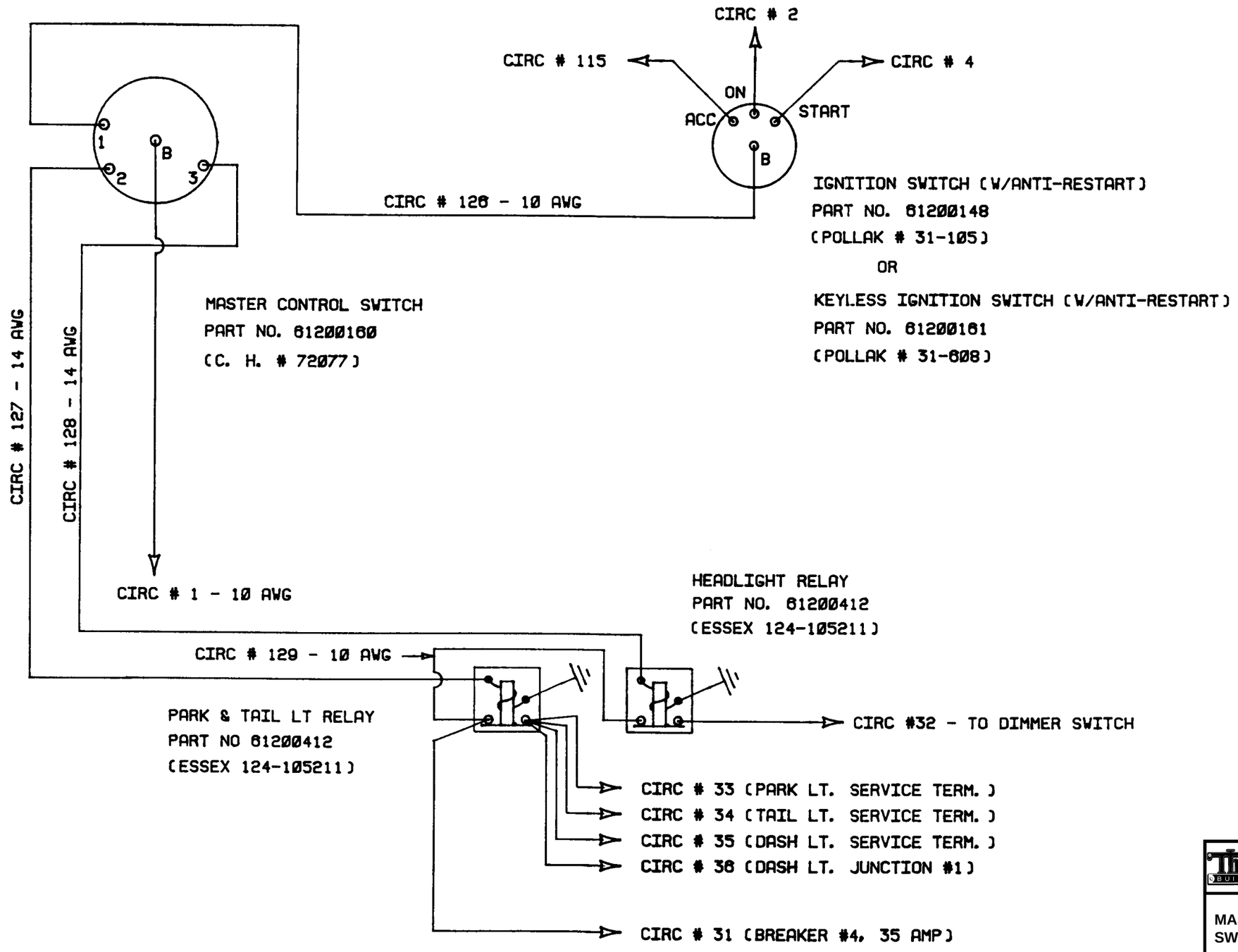

Thomas BUILT BUSES

62200646 B

MASTER CONTROL SWITCH

Option C-3675

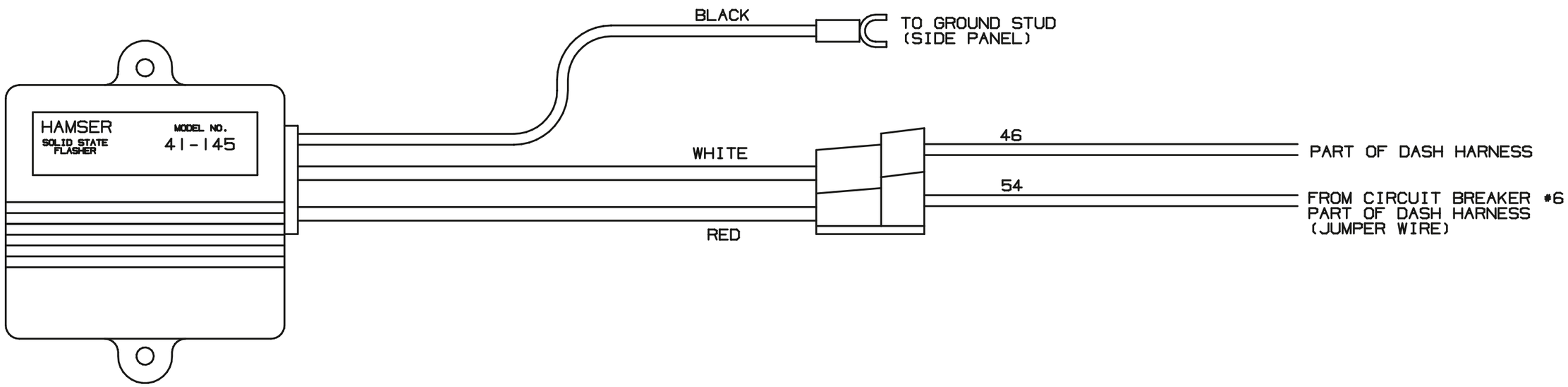

WIRING CONNECTIONS

1) CONNECT 46 CIRCUIT TO WHITE CIRCUIT ON SOLID STATE RELAY.

2) CONNECT 54 CIRCUIT TO RED CIRCUIT ON SOLID STATE RELAY.

3) CONNECT TERMINAL ON BLACK CIRCUIT TO SIDE PANEL GROUND STUD.

Thomas BUILT BUSES

62201873 A

HAZARD LAMPS SOLID STATE FLASHER

NOTES:

MVP-ER
ALTERNATOR
SCHEMATICS

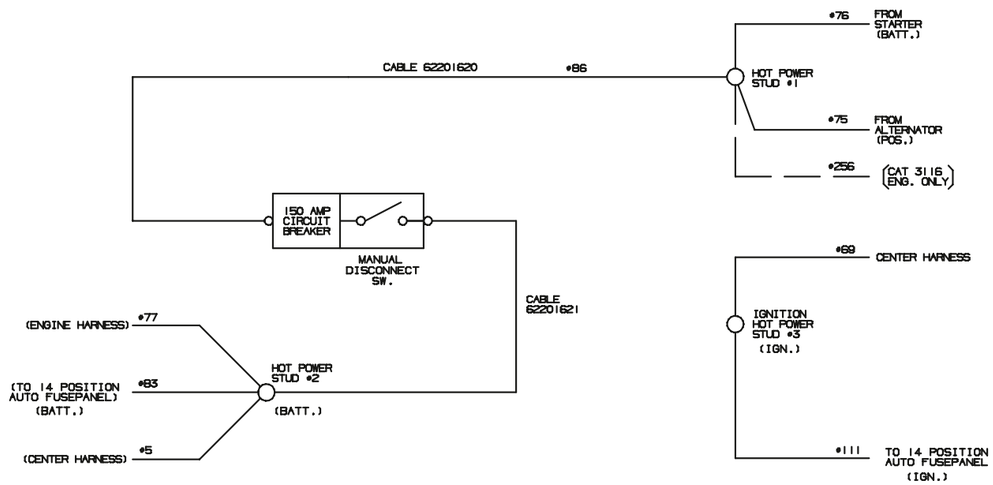

WIRING, SCHEMATIC - MVP-ER MODULAR BOX, STANDARD EQUIP.

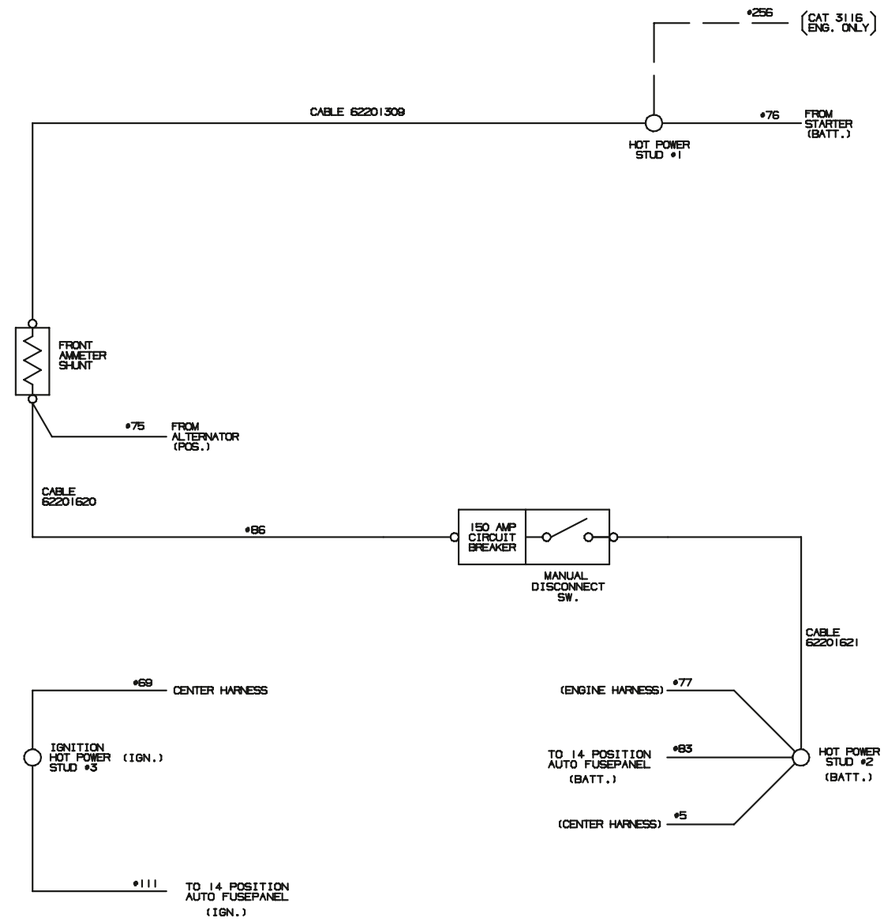

WIRING, SCHEMATIC - FRONT AMMETER (OPTION C3615-00-000)

Thomas BUILT BUSES

62201627 A

POWER CABLE TERM. POINTS, MOD. REAR BOX

LEGEND

EXISTING WIRING ————————

NEW WIRING - - - - - - - - - -

NOTES:

1. ALTERNATOR CHARGE LIGHT INDICATOR RELAY (61200695) IS TO BE MOUNTED ON FRONT CHASSIS SIDE ELECT. PANEL BESIDE EXISTING HEADLIGHT/VISUAL HORN RELAYS.
2. THIS INSTALLATION OPTION IS FOR DELCO ALTERNATOR MODELS 21SI SERIES UNITS ONLY.
3. ADDED NEW WIRE CIRCUITS TO BE 14 AWG.

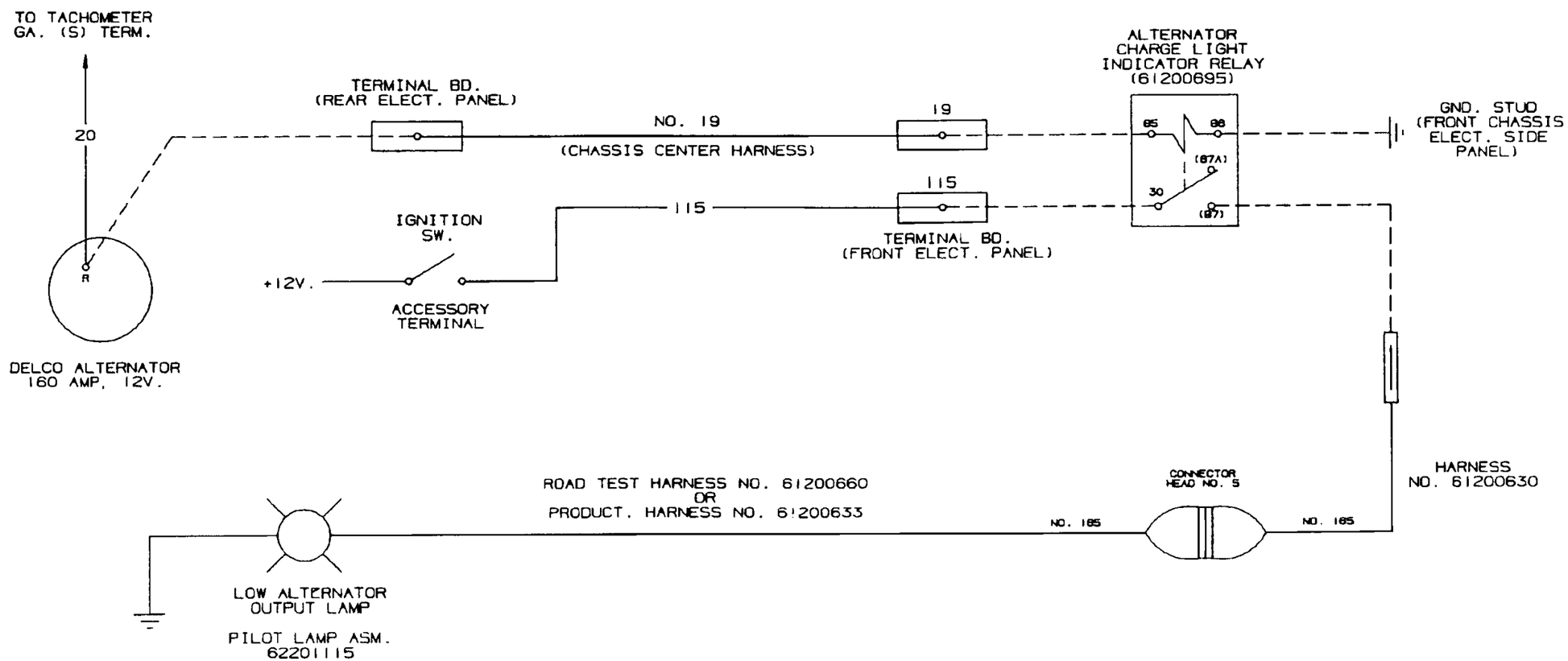

Thomas BUILT BUSES

62201121 A

ALTERNATOR LOW OUTPUT CHARGE INDICATOR RELAY/LIGHT (DELCO)

Option C3677-02-000

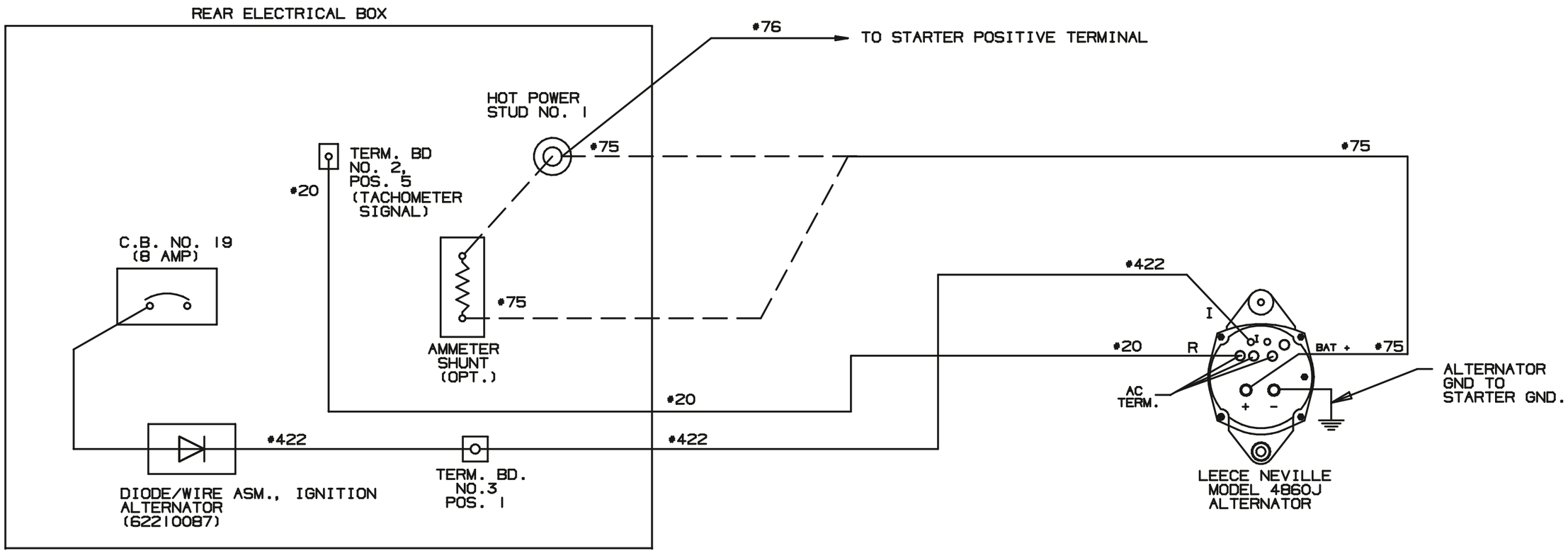

NOTE:

1. ALTERNATOR: A. LEECE NEVILLE MODEL 4860J (200 AMP)

2. CHASSIS: MVP-ER AND ER TRANSIT ONLY

Thomas BUILT BUSES

62202874 A

ALTERNATOR DIODE ASSEMBLY

Effective Date; 03/09/99

MVP-ER
MISCELLANEOUS
SCHEMATICS

NOTE: SCHEMATIC REFLECTS WIRING
HARNESS PART NO.62202172

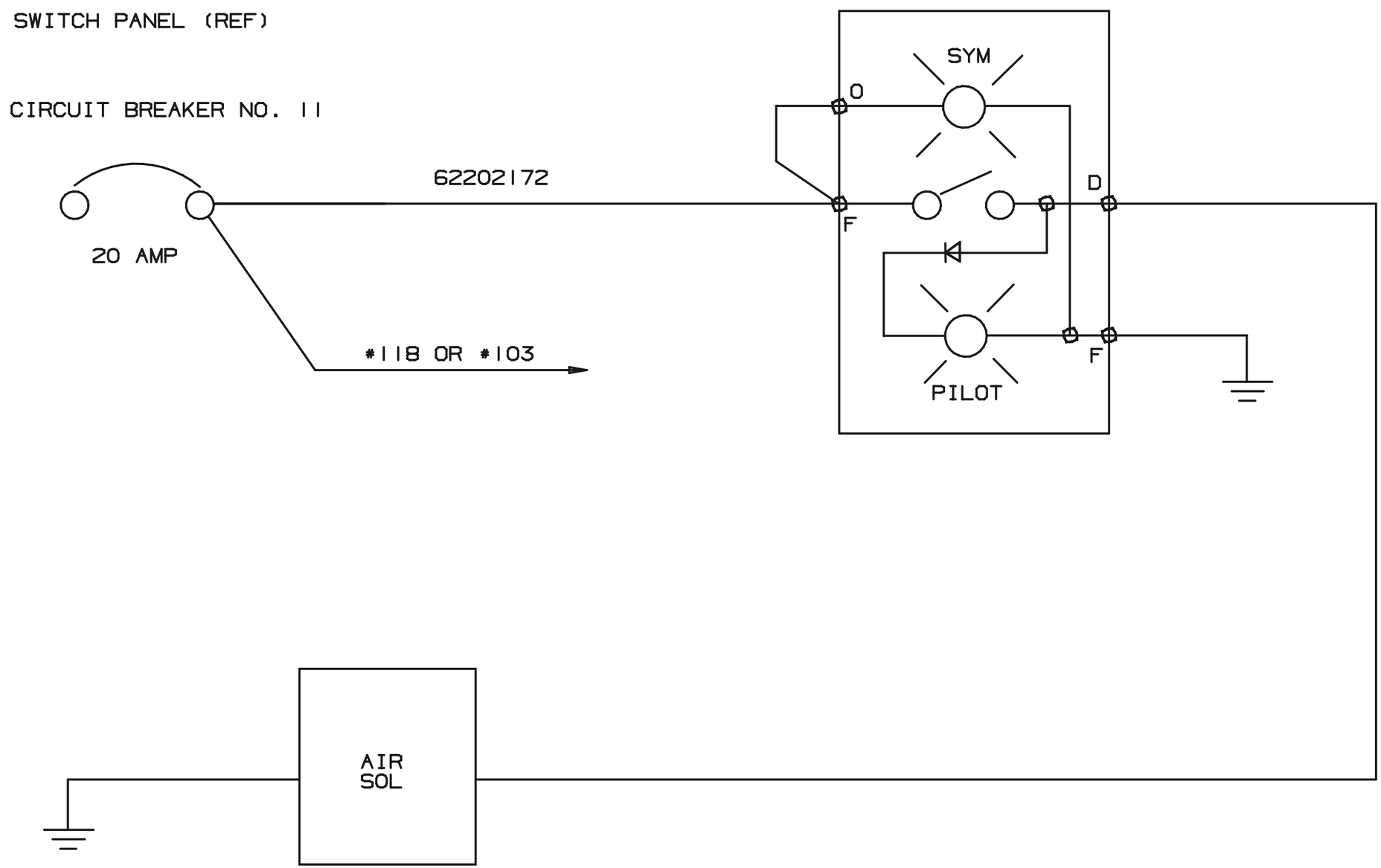

Thomas BUILT BUSES

62202174 B

ELECT. ONSPOT CHAINS

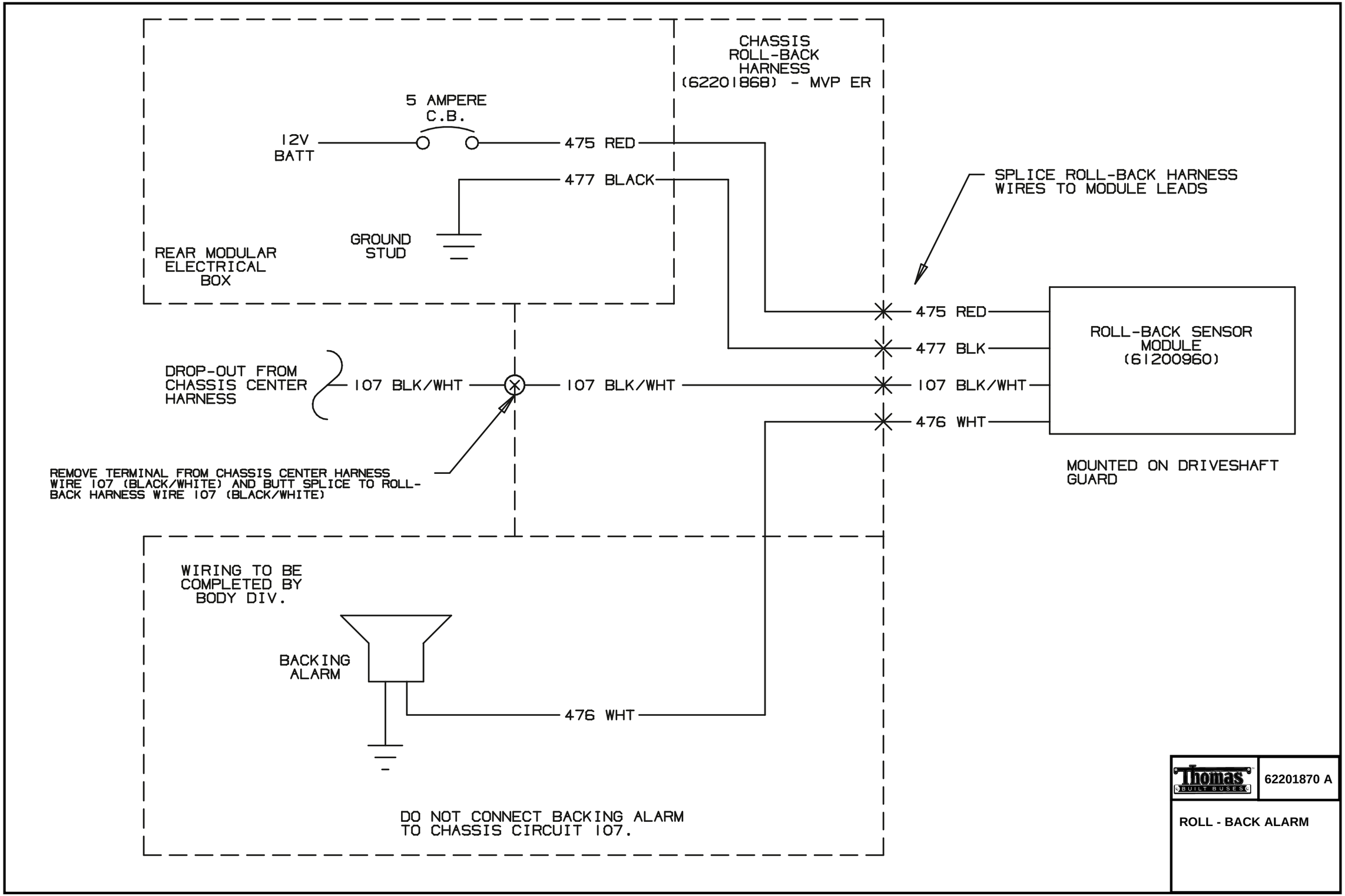
CHASSIS
ROLL-BACK
HARNESS
(62201868) - MVP ER
5 AMPERE
C.B.
12V
BATT
475 RED
477 BLACK
GROUND
STUD
REAR MODULAR
ELECTRICAL
BOX
SPLICE ROLL-BACK HARNESS
WIRES TO MODULE LEADS
475 RED
477 BLK
107 BLK/WHT
476 WHT
ROLL-BACK SENSOR
MODULE
(61200960)
MOUNTED ON DRIVESHAFT
GUARD
DROP-OUT FROM
CHASSIS CENTER
HARNESS
107 BLK/WHT
107 BLK/WHT
REMOVE TERMINAL FROM CHASSIS CENTER HARNESS
WIRE 107 (BLACK/WHITE) AND BUTT SPLICE TO ROLL-
BACK HARNESS WIRE 107 (BLACK/WHITE)
WIRING TO BE
COMPLETED BY
BODY DIV.
BACKING
ALARM
476 WHT
DO NOT CONNECT BACKING ALARM
TO CHASSIS CIRCUIT 107.
Thomas
BUILT BUSES
62201870 A
ROLL - BACK ALARM

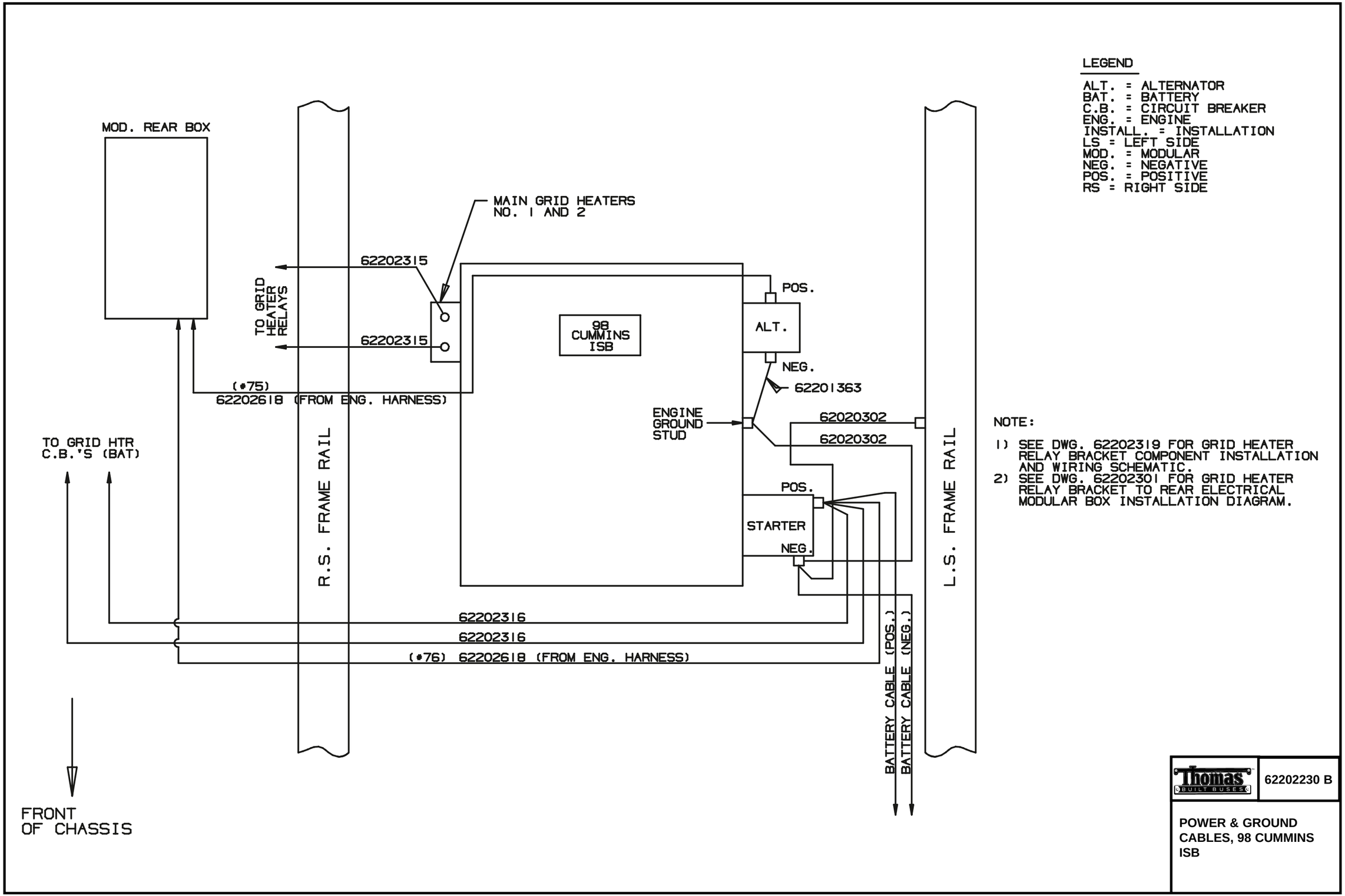
MOD. REAR BOX
MAIN GRID HEATERS
NO. 1 AND 2
62202315
TO GRID
HEATER
RELAYS
62202315
98
CUMMINS
ISB
POS.
ALT.
NEG.
62201363
(#75)
62202618 (FROM ENG. HARNESS)
ENGINE
GROUND
STUD
62020302
62020302
TO GRID HTR
C.B.'S (BAT)
R.S. FRAME RAIL
POS.
STARTER
NEG.
L.S. FRAME RAIL
62202316
62202316
(#76) 62202618 (FROM ENG. HARNESS)
BATTERY CABLE (POS.)
BATTERY CABLE (NEG.)
FRONT
OF CHASSIS
LEGEND
ALT. = ALTERNATOR
BAT. = BATTERY
C.B. = CIRCUIT BREAKER
ENG. = ENGINE
INSTALL. = INSTALLATION
LS = LEFT SIDE
MOD. = MODULAR
NEG. = NEGATIVE
POS. = POSITIVE
RS = RIGHT SIDE
NOTE:
1) SEE DWG. 62202319 FOR GRID HEATER RELAY BRACKET COMPONENT INSTALLATION AND WIRING SCHEMATIC.
2) SEE DWG. 62202301 FOR GRID HEATER RELAY BRACKET TO REAR ELECTRICAL MODULAR BOX INSTALLATION DIAGRAM.
Thomas BUILT BUSES
62202230 B
POWER & GROUND CABLES, 98 CUMMINS ISB

ITEM	PART NO.	DESCRIPTION	QTY
1	62201927	BRACKET, MTG. - GRID HTR., POWER RELAYS/C.B.	1
2	61200957	BREAKER, CIRCUIT - 135 AMP	2
3	61200875	RELAY, POWER	2
4	61370720	ISOLATOR - MOUNTING PAD (NOT SHOWN)	3
5	61370263	LOCKWASHER - 5/16" (NOT SHOWN)	6
6	61370056	NUT - HEX HEAD, 5/16" (NOT SHOWN)	6
7	61370803	BOLT, HEX HEAD - 1/4"-20x1" LONG (NOT SHOWN)	12
8	61370050	NUT, HEX - 1/4"-20 (NOT SHOWN)	12
9	62201959	CABLE, POWER ASM., AIR INLET GRID HTR NO.1 C.B.(AUX) TO PWR SOLENOID NO.1 (INPUT)	1
10	62201958	CABLE, POWER ASM., AIR INLET GRID HTR NO.2 C.B.(AUX) TO PWR SOLENOID NO.2(INPUT)	1
11	61480473	CLAMP-LOOP, CUSHIONED, TWO TUBE,	1
12	62202316	CABLE, POWER ASM., STARTER POS. TERM. TO AIR INLET GRID HTR NO.2 C.B.(BAT)	1
13	62202316	CABLE, POWER ASM., STARTER POS. TERM. TO AIR INLET GRID HTR NO. 1 C.B. (BAT)	1
14	62202315	CABLE, POWER ASM., POWER SOLENOID NO.1 (OUTPUT) TO ENGINE GRID HTR NO.1 (ON ENG.)	1
15	62202315	CABLE, POWER ASM., POWER SOLENOID NO.2 (OUTPUT) TO ENGINE GRID HTR NO.2 (ON ENG.)	1
16	62202328	HARNESS, WIRING - GRID HEATER RELAYS	1

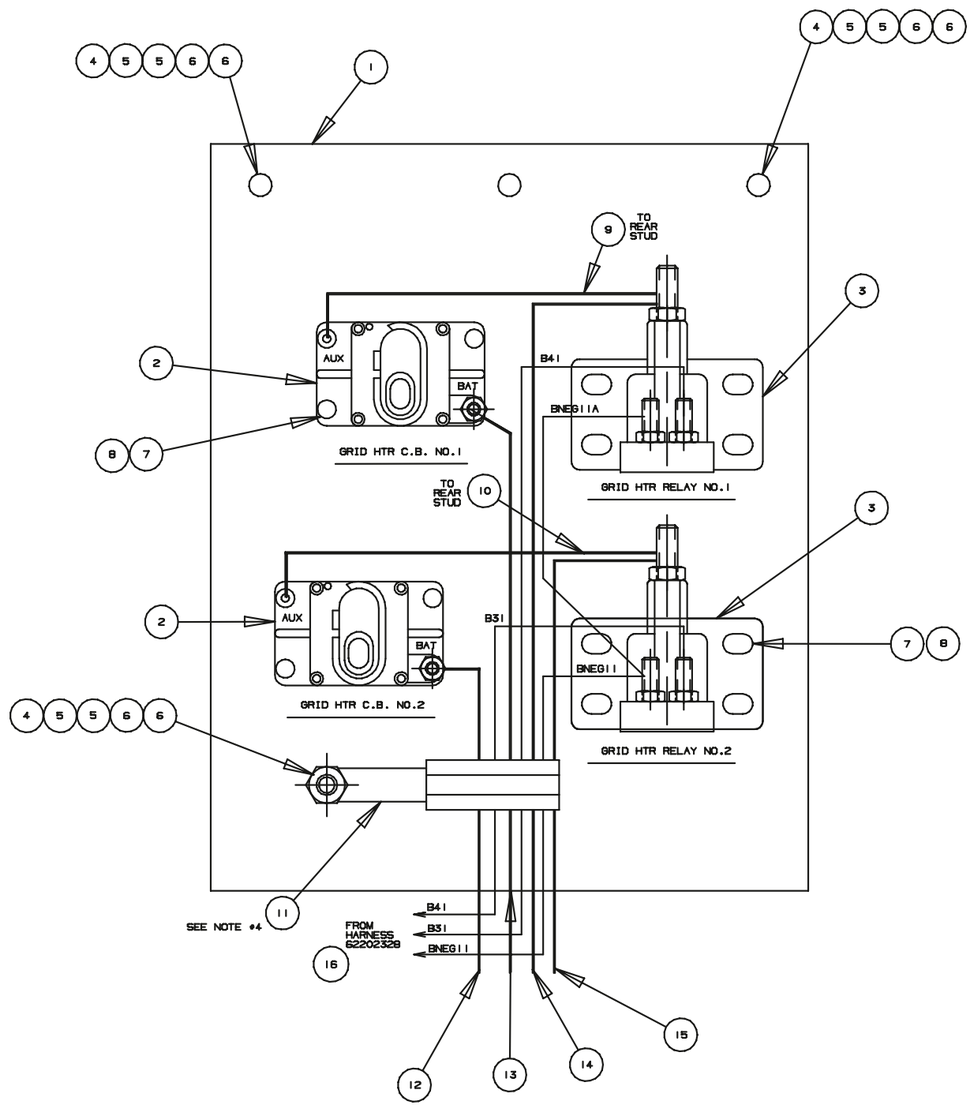

GRID HTR CONTROL
WIRING SCHEMATIC DETAIL

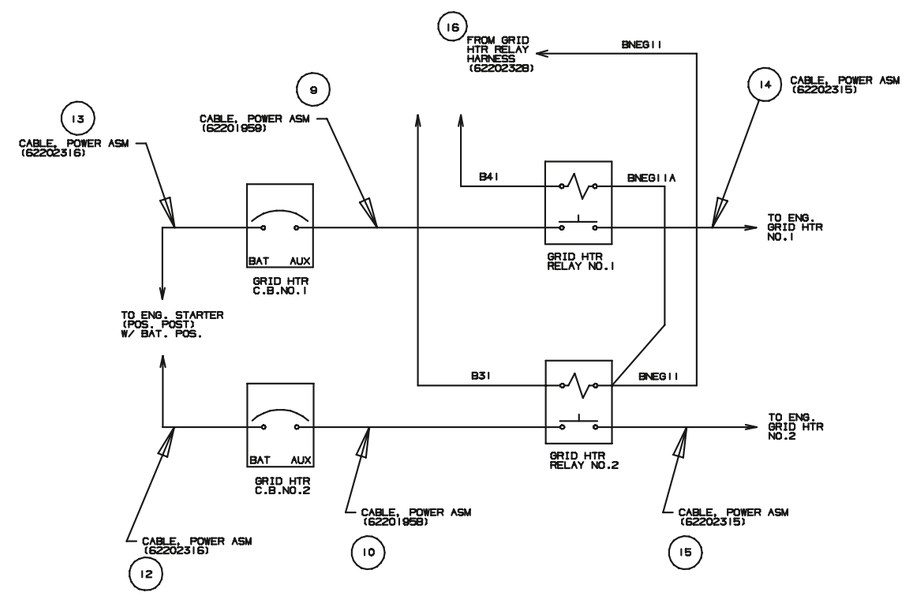

NOTES:

1. CLAMP CABLES ON EXISTING STUD AT ISOLATOR MOUNT.
2. USE 18" OF CONVOLUTED TUBING (61200202) TO BEGIN AT THE HEAT SHRINK ON ITEM 12 AND CONTINUE THROUGH THE CLAMP(ITEM 11)
3. SEE REAR ELECTRICAL BOX INSTALLATION DWG. 62202301 FOR MOUNTING LOCATION.
4. CLAMP MOUNTING LOCATION IS ALONG CENTERLINE OF PLATE. ILLUSTRATION SHOWN FOR CLARITY OF WIRING ONLY.

Thomas BUILT BUSES

62202319 C

ELECTRICAL COMPONENT MTG./WIRING GRID HTRS., 98 CUMMINS ISB

NOTES:

1998-1999
Electrical Wiring
Manual

1408 Courtesy Road
Post Office Box 2450
High Point, NC 27261
(336) 889-4871

Thomas Built Buses of Canada
275 Tecumseh Street
Woodstock, Ontario, Canada N4S-7Z5

Thomas Built Buses de Mexico, S.A. de C.V.
Av. "A" No. 100 Frac. Industrial Almacentro
Apodaca, N.L. C.P. 66600 Mexico

Thomas BUILT BUSES

A Subsidiary of FREIGHTLINER CORPORATION

Freightliner Corporation is a DaimlerChrysler Company